MITSUBISHI ELECTRIC

700 series

INVERTER

F700

INSTRUCTION MANUAL

FR-F720-00046 to 04750-NA
FR-F740-00023 to 12120-NA

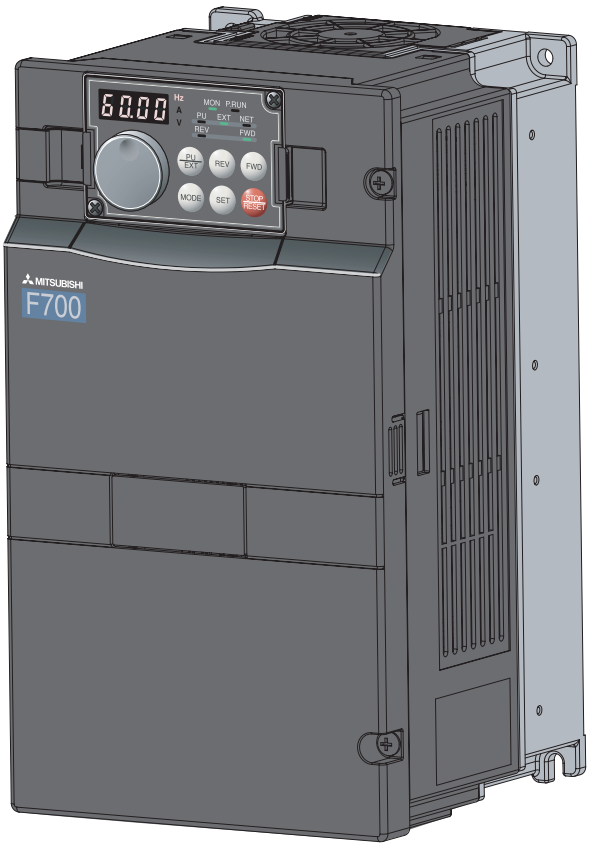

OUTLINE 1

WIRING 2

PRECAUTIONS FOR USE OF THE INVERTER 3

PARAMETERS 4

PROTECTIVE FUNCTIONS 5

PRECAUTIONS FOR MAINTENANCE AND INSPECTION 6

SPECIFICATIONS 7

Thank you for choosing this Mitsubishi Inverter.
This Instruction Manual provides instructions for advanced use of the FR-F700 series inverters.
Incorrect handling might cause an unexpected fault. Before using the inverter, always read this Instruction Manual and the Installation Guideline [IB-0600218ENG] packed with the product carefully to use the equipment to its optimum.

This section is specifically about safety matters

Do not attempt to install, operate, maintain or inspect the inverter until you have read through Installation Guideline and appended documents carefully and can use the equipment correctly. Do not use the inverter until you have a full knowledge of the equipment, safety information and instructions. In this Instruction Manual, the safety instruction levels are classified into "WARNING" and "CAUTION".

⚠WARNING Incorrect handling may cause hazardous conditions, resulting in death or severe injury.

⚠CAUTION Incorrect handling may cause hazardous conditions, resulting in medium or slight injury, or may cause only material damage.

The **⚠CAUTION** level may even lead to a serious consequence according to conditions. Both instruction levels must be followed because these are important to personal safety.

1. Electric Shock Prevention

⚠WARNING

- While power is ON or when the inverter is running, do not open the front cover. Otherwise you may get an electric shock.
- Do not run the inverter with the front cover or wiring cover removed.
  Otherwise you may access the exposed high-voltage terminals or the charging part of the circuitry and get an electric shock.
- Even if power is OFF, do not remove the front cover except for wiring or periodic inspection. You may accidentally touch the charged inverter circuits and get an electric shock.
- Before wiring, inspection or switching EMC filter ON/OFF connector, power must be switched OFF. To confirm that, LED indication of the operation panel must be checked. (It must be OFF.) Any person who is involved in wiring, inspection or switching EMC filter ON/OFF connector shall wait for at least 10 minutes after the power supply has been switched OFF and check that there are no residual voltage using a tester or the like. The capacitor is charged with high voltage for some time after power OFF, and it is dangerous.
- This inverter must be grounded. Grounding must conform to the requirements of national and local safety regulations and electrical code (NEC section 250, IEC 536 class 1 and other applicable standards).
  A neutral-point earthed (grounded) power supply for 400V class inverter in compliance with EN standard must be used.
- Any person who is involved in wiring or inspection of this equipment shall be fully competent to do the work.
- The inverter must be installed before wiring. Otherwise you may get an electric shock or be injured.
- Setting dial and key operations must be performed with dry hands to prevent an electric shock. Otherwise you may get an electric shock.
- Do not subject the cables to scratches, excessive stress, heavy loads or pinching. Otherwise you may get an electric shock.
- Do not replace the cooling fan while power is ON. It is dangerous to replace the cooling fan while power is ON.
- Do not touch the printed circuit board or handle the cables with wet hands. Otherwise you may get an electric shock.
- When measuring the main circuit capacitor capacity (*Pr. 259 Main circuit capacitor life measuring* = "1"), the DC voltage is applied to the motor for 1s at powering OFF. Never touch the motor terminal, etc. right after powering OFF to prevent an electric shock.

2. Fire Prevention

⚠CAUTION

- Inverter must be installed on a nonflammable wall without holes (so that nobody touches the inverter heatsink on the rear side, etc.). Mounting it to or near flammable material can cause a fire.
- If the inverter has become faulty, the inverter power must be switched OFF. A continuous flow of large current could cause a fire.
- Do not connect a resistor directly to the DC terminals P/+ and N/-. Doing so could cause a fire.

3. Injury Prevention

⚠CAUTION

- The voltage applied to each terminal must be the ones specified in the Instruction Manual. Otherwise burst, damage, etc. may occur.
- The cables must be connected to the correct terminals. Otherwise burst, damage, etc. may occur.
- Polarity must be correct. Otherwise burst, damage, etc. may occur.
- While power is ON or for some time after power-OFF, do not touch the inverter since the inverter will be extremely hot. Doing so can cause burns.

4. Additional Instructions

Also the following points must be noted to prevent an accidental failure, injury, electric shock, etc.

(1) Transportation and installation

⚠CAUTION

- The product must be transported in correct method that corresponds to the weight. Failure to do so may lead to injuries.
- Do not stack the boxes containing inverters higher than the number recommended.
- The product must be installed to the position where withstands the weight of the product according to the information in the Instruction Manual.
- Do not install or operate the inverter if it is damaged or has parts missing. This can result in breakdowns.
- When carrying the inverter, do not hold it by the front cover or setting dial; it may fall off or fail.
- Do not stand or rest heavy objects on the product.
- The inverter mounting orientation must be correct.
- Foreign conductive objects must be prevented from entering the inverter. That includes screws and metal fragments or other flammable substance such as oil.
- As the inverter is a precision instrument, do not drop or subject it to impact.
- The inverter must be used under the following environment: Otherwise the inverter may be damaged.

Environment	Surrounding air temperature	LD	-10°C to +50°C (14°F to 122°F) (non-freezing)
		SLD (initial setting)	-10°C to +40°C (14°F to 104°F) (non-freezing)
	Ambient humidity		90% RH or less (non-condensing)
	Storage temperature		-20°C to +65°C *1 (-4°F to 149°F)
	Atmosphere		Indoors (free from corrosive gas, flammable gas, oil mist, dust and dirt)
	Altitude, vibration		Maximum 1000m (3280.80feet) above sea level for standard operation. After that derate by 3% for every extra 500m (1640.40feet) up to 2500m (8202feet) (91%). 5.9m/s^2 or less *2 at 10 to 55Hz (directions of X, Y, Z axes)

*1 Temperature applicable for a short time, e.g. in transit.
*2 2.9m/s^2 or less for the FR-F740-04320 or more.

(2) Wiring ⚠CAUTION

- Do not install a power factor correction capacitor, surge suppressor or capacitor type filter on the inverter output side. These devices on the inverter output side may be overheated or burn out.
- The connection orientation of the output cables U, V, W to the motor affects the rotation direction of the motor.

(3) Test operation and adjustment
⚠CAUTION

- Before starting operation, each parameter must be confirmed and adjusted. A failure to do so may cause some machines to make unexpected motions.

(4) Operation ⚠WARNING

- Any person must stay away from the equipment when the retry function is set as it will restart suddenly after trip.
- Since pressing STOP RESET key may not stop output depending on the function setting status, separate circuit and switch that make an emergency stop (power OFF, mechanical brake operation for emergency stop, etc.) must be provided.
- OFF status of the start signal must be confirmed before resetting the inverter fault. Resetting inverter alarm with the start signal ON restarts the motor suddenly.
- The inverter must be used for three-phase induction motors. Connection of any other electrical equipment to the inverter output may damage the equipment.
- Do not modify the equipment.
- Do not perform parts removal which is not instructed in this manual. Doing so may lead to fault or damage of the inverter.

⚠CAUTION

- The electronic thermal relay function does not guarantee protection of the motor from overheating. It is recommended to install both an external thermal and PTC thermistor for overheat protection.
- Do not use a magnetic contactor on the inverter input for frequent starting/stopping of the inverter. Otherwise the life of the inverter decreases.
- The effect of electromagnetic interference must be reduced by using a noise filter or by other means. Otherwise nearby electronic equipment may be affected.
- Appropriate measures must be taken to suppress harmonics. Otherwise power supply harmonics from the inverter may heat/damage the power factor correction capacitor and generator.
- When driving a 400V class motor by the inverter, the motor must be an insulation-enhanced motor or measures must be taken to suppress surge voltage. Surge voltage attributable to the wiring constants may occur at the motor terminals, deteriorating the insulation of the motor.
- When parameter clear or all parameter clear is performed, the required parameters must be set again before starting operations because all parameters return to the initial value.
- The inverter can be easily set for high-speed operation. Before changing its setting, the performances of the motor and machine must be fully examined.
- Stop status cannot be hold by the inverter's brake function. In addition to the inverter's brake function, a holding device must be installed to ensure safety.
- Before running an inverter which had been stored for a long period, inspection and test operation must be performed.
- For prevention of damage due to static electricity, nearby metal must be touched before touching this product to eliminate static electricity from your body.

(5) Emergency stop ⚠CAUTION

- A safety backup such as an emergency brake must be provided to prevent hazardous condition to the machine and equipment in case of inverter failure.
- When the breaker on the inverter input side trips, the wiring must be checked for fault (short circuit), and internal parts of the inverter for a damage, etc. The cause of the trip must be identified and removed before turning ON the power of the breaker.
- When any protective function is activated, appropriate corrective action must be taken, and the inverter must be reset before resuming operation.

(6) Maintenance, inspection and parts replacement
⚠CAUTION

- Do not carry out a megger (insulation resistance) test on the control circuit of the inverter. It will cause a failure.

(7) Disposing of the inverter
⚠CAUTION

- The inverter must be treated as industrial waste.

General instructions

Many of the diagrams and drawings in this Instruction Manual show the inverter without a cover or partially open for explanation. Never operate the inverter in this manner. The cover must be always reinstalled and the instruction in this Instruction Manual must be followed when operating the inverter.

CONTENTS

1 OUTLINE 1

1.1 Product checking and parts identification 2
1.2 Inverter and peripheral devices 3
1.2.1 Peripheral devices 4
1.3 Method of removal and reinstallation of the front cover 6
1.4 Installation of the inverter and enclosure design 8
1.4.1 Inverter installation environment 8
1.4.2 Cooling system types for inverter enclosure 10
1.4.3 Inverter placement 10

2 WIRING 13

2.1 Wiring 14
2.1.1 Terminal connection diagram 14
2.1.2 EMC filter 15
2.2 Main circuit terminal specifications 16
2.2.1 Specification of main circuit terminal 16
2.2.2 Terminal arrangement of the main circuit terminal, power supply and the motor wiring 16
2.2.3 Cables and wiring length 21
2.2.4 When connecting the control circuit and the main circuit separately to the power supply 25
2.3 Control circuit specifications 27
2.3.1 Control circuit terminals 27
2.3.2 Changing the control logic 30
2.3.3 Control circuit terminal layout 32
2.3.4 Wiring instructions 33
2.3.5 Mounting the operation panel (FR-DU07) on the enclosure surface 34
2.3.6 RS-485 terminal block 35
2.3.7 Communication operation 35
2.4 Connection of stand-alone option units 36
2.4.1 Connection of the brake unit (FR-BU2) 36
2.4.2 Connection of the brake unit (FR-BU/MT-BU5) 38
2.4.3 Connection of the brake unit (BU type) 40
2.4.4 Connection of the high power factor converter (FR-HC/MT-HC) 40
2.4.5 Connection of the power regeneration common converter (FR-CV) (FR-F720-02330 (FR-F740-01160) or less) 42
2.4.6 Connection of the power regeneration converter (MT-RC) (FR-F720-03160 (FR-F740-01800) or more) 43
2.4.7 Connection of the power factor improving DC reactor (FR-HEL) 44

3 PRECAUTIONS FOR USE OF THE INVERTER 45

3.1 EMC and leakage currents 46

3.1.1 Leakage currents and countermeasures 46
3.1.2 EMC measures 48
3.1.3 Power supply harmonics 50

3.2 Installation of a reactor 51

3.3 Power-OFF and magnetic contactor (MC) 51

3.4 Inverter-driven 400V class motor 52

3.5 Precautions for use of the inverter 53

3.6 Failsafe of the system which uses the inverter 55

4 PARAMETERS 57

4.1 Operation panel (FR-DU07) 58

4.1.1 Component of the operation panel (FR-DU07) 58
4.1.2 Basic operation (factory setting) 59
4.1.3 Easy operation mode setting (easy setting mode) 60
4.1.4 Changing the parameter setting value 61
4.1.5 Displaying the set frequency 61

4.2 Parameter list 62

4.2.1 Parameter list 62

4.3 Adjustment of the output torque (current) of the motor 78

4.3.1 Manual torque boost (Pr. 0, Pr. 46) 78
4.3.2 Simple magnetic flux vector control (Pr.80, Pr.90) 79
4.3.3 Slip compensation (Pr. 245 to Pr. 247) 80
4.3.4 Stall prevention operation (Pr. 22, Pr. 23, Pr. 48, Pr. 49, Pr. 66, Pr. 148, Pr. 149, Pr. 154, Pr. 156, Pr. 157) 81
4.3.5 Multiple rating (Pr. 570) 86

4.4 Limiting the output frequency 87

4.4.1 Maximum/minimum frequency (Pr. 1, Pr. 2, Pr. 18) 87
4.4.2 Avoiding mechanical resonance points (Frequency jump) (Pr. 31 to Pr. 36) 88

4.5 V/F pattern 89

4.5.1 Base frequency, voltage (Pr. 3, Pr. 19, Pr. 47) 89
4.5.2 Load pattern selection (Pr. 14) 91
4.5.3 Adjustable 5 points V/F (Pr. 71, Pr. 100 to Pr. 109) 92

4.6 Frequency setting by external terminals 93

4.6.1 Multi-speed setting operation (Pr. 4 to Pr. 6, Pr. 24 to Pr. 27, Pr. 232 to Pr. 239) 93
4.6.2 Jog operation (Pr. 15, Pr. 16) 95
4.6.3 Input compensation of multi-speed and remote setting (Pr. 28) 97
4.6.4 Remote setting function (Pr. 59) 98

4.7 Setting of acceleration/deceleration time and acceleration/deceleration pattern 101

4.7.1 Setting of the acceleration and deceleration time (Pr. 7, Pr. 8, Pr. 20, Pr. 21, Pr. 44, Pr. 45, Pr. 147) 101

4.7.2 Starting frequency and start-time hold function (Pr. 13, Pr. 571) 104

4.7.3 Acceleration/deceleration pattern (Pr. 29, Pr. 140 to Pr. 143) 105

4.8 Selection and protection of a motor 107

4.8.1 Motor protection from overheat (Electronic thermal relay function) (Pr. 9, Pr. 51) 107

4.8.2 Applied motor (Pr. 71) 111

4.9 Motor brake and stop operation 112

4.9.1 DC injection brake (Pr. 10 to Pr. 12) 112

4.9.2 Selection of a regenerative brake and DC feeding (Pr. 30, Pr. 70) 114

4.9.3 Stop selection (Pr. 250) 119

4.9.4 Output stop function (Pr. 522) 120

4.10 Function assignment of external terminal and control 122

4.10.1 Input terminal function selection (Pr. 178 to Pr. 189) 122

4.10.2 Inverter output shutoff signal (MRS signal, Pr. 17) 124

4.10.3 Condition selection of function validity by the second function selection signal (RT) (RT signal, Pr. 155) 125

4.10.4 Start signal selection (STF, STR, STOP signal, Pr. 250) 126

4.10.5 Output terminal function selection (Pr. 190 to Pr. 196) 128

4.10.6 Detection of output frequency (SU, FU, FU2 signal, Pr. 41 to Pr. 43, Pr. 50, Pr. 870) 133

4.10.7 Output current detection function (Y12 signal, Y13 signal, Pr. 150 to Pr. 153, Pr. 166, Pr. 167) 135

4.10.8 Remote output function (REM signal, Pr. 495 to Pr. 497) 137

4.10.9 Pulse train output of output power (Y79 signal, Pr. 799) 138

4.11 Monitor display and monitor output signal 139

4.11.1 Speed display and speed setting (Pr. 37, Pr. 144, Pr. 505) 139

4.11.2 DU/PU monitor display selection (Pr. 52, Pr. 54, Pr. 158, Pr. 170, Pr. 171, Pr. 268, Pr. 563, Pr. 564, Pr. 891) 141

4.11.3 CA, AM terminal function selection (Pr.55, Pr.56, Pr.867, Pr.869) 147

4.11.4 Terminal CA, AM calibration (Calibration parameter C0 (Pr. 900), C1 (Pr. 901), C8 (Pr.930) to C11 (Pr. 931)) 149

4.11.5 How to calibrate the terminal CA when using the operation panel (FR-DU07) 151

4.12 Operation selection at power failure and instantaneous power failure 152

4.12.1 Automatic restart after instantaneous power failure / flying start (Pr. 57, Pr. 58, Pr. 162 to Pr. 165, Pr. 299, Pr. 611) 152

4.12.2 Power failure signal (Y67 signal) 155

4.12.3 Power failure-time deceleration-to-stop function (Pr. 261 to Pr. 266) 156

4.13 Operation setting at fault occurrence 159

4.13.1 Retry function (Pr. 65, Pr. 67 to Pr. 69) 159

4.13.2 Fault code output selection (Pr. 76) 161

4.13.3 Input/output phase loss protection selection (Pr. 251, Pr. 872) 162

4.14 Energy saving operation and energy saving monitor 163

4.14.1 Energy saving control and Optimum excitation control (Pr. 60) 163

4.14.2 Energy saving monitor (Pr. 891 to Pr. 899) 164

4.15 Motor noise, EMI measures, mechanical resonance 169

4.15.1 PWM carrier frequency and Soft-PWM control (Pr. 72, Pr. 240, Pr. 260) 169

4.15.2 Speed smoothing control (Pr. 653, Pr. 654) 170

4.16 Frequency setting by analog input (terminal 1, 2, 4) 171

4.16.1 Analog input selection (Pr. 73, Pr. 267) 171

4.16.2 Analog input compensation (Pr. 73, Pr. 242, Pr. 243, Pr. 252, Pr. 253) 175

4.16.3 Response level of analog input and noise elimination (Pr. 74) 176

4.16.4 Bias and gain of frequency setting voltage (current) (Pr. 125, Pr. 126, Pr. 241, C2(Pr. 902) to C7(Pr. 905)) 177

4.16.5 4mA input check of current input (Pr. 573, Pr. 777, Pr. 778) 182

4.17 Misoperation prevention and parameter setting restriction 186

4.17.1 Reset selection/disconnected PU detection/PU stop selection (Pr. 75) 186

4.17.2 Parameter write selection (Pr. 77) 189

4.17.3 Reverse rotation prevention selection (Pr. 78) 190

4.17.4 Display of applied parameters and user group function (Pr. 160, Pr. 172 to Pr. 174) 190

4.17.5 Password function (Pr. 296, Pr. 297) 192

4.18 Selection of operation mode and operation location 195

4.18.1 Operation mode selection (Pr. 79) 195

4.18.2 Operation mode at power ON (Pr. 79, Pr. 340) 203

4.18.3 Start command source and speed command source during communication operation (Pr. 338, Pr. 339, Pr. 550, Pr. 551) 204

4.19 Communication operation and setting 209

4.19.1 Wiring and configuration of PU connector 209

4.19.2 Wiring and arrangement of RS-485 terminals 211

4.19.3 Initial settings and specifications of RS-485 communication (Pr. 117 to Pr. 124, Pr. 331 to Pr. 337, Pr. 341, Pr. 549) 214

4.19.4 Communication EEPROM write selection (Pr. 342) 216

4.19.5 Operation selection at communication error (Pr.502, Pr.779) 216

4.19.6 Mitsubishi inverter protocol (computer link communication) 219

4.19.7 Modbus-RTU communication specifications (Pr. 331, Pr. 332, Pr. 334, Pr. 343, Pr. 502, Pr. 539, Pr. 549, Pr.779) 232

4.19.8 BACnet MS/TP protocol 247

4.19.9 Operation by PLC function (Pr. 414, Pr. 415, Pr. 498, Pr. 506 to Pr. 515, Pr. 826 to Pr. 865) 260

4.20 PID control 261

4.20.1 Outline of PID control (Pr. 127 to Pr. 134, Pr. 241, Pr. 553, Pr. 554, Pr. 575 to Pr. 577) 261

4.20.2 Bias and gain calibration for PID displayed values (Pr. 241, Pr. 759, C42(Pr. 934) to C45(Pr. 935)) ... 273
4.20.3 Pre-charge function (Pr.760 to Pr. 769) ... 275
4.20.4 Second PID function (Pr.753 to Pr. 758, Pr.765 to Pr.769) ... 281
4.20.5 Advanced PID function (pump function) (Pr. 554, Pr. 575 to Pr. 591) ... 283

4.21 Special operation and frequency control ... 293

4.21.1 Bypass-inverter switchover function (Pr. 57, Pr. 58, Pr. 135 to Pr. 139, Pr. 159) ... 293
4.21.2 Regeneration avoidance function (Pr. 665, Pr. 882 to Pr. 886) ... 298

4.22 Useful functions ... 300

4.22.1 Cooling fan operation selection (Pr. 244) ... 300
4.22.2 Display of the life of the inverter parts (Pr. 255 to Pr .259) ... 301
4.22.3 Maintenance timer alarm (Pr. 503, Pr. 504) ... 304
4.22.4 Current average value monitor signal (Pr. 555 to Pr. 557) ... 305
4.22.5 Free parameter (Pr. 888, Pr. 889) ... 307
4.22.6 Initiating a fault (Pr.997) ... 308
4.22.7 Setting multiple parameters as a batch (Pr.999) ... 309

4.23 Setting from the parameter unit, operation panel ... 315

4.23.1 PU display language selection (Pr. 145) ... 315
4.23.2 Setting dial potentiometer mode/key lock selection (Pr. 161) ... 315
4.23.3 Buzzer control (Pr. 990) ... 317
4.23.4 PU contrast adjustment (Pr. 991) ... 317

4.24 Setting of FR-PU07-01 ... 318

4.24.1 PID display bias/gain setting menu ... 319
4.24.2 Unit selection for the PID parameter/PID monitored items (Pr. 759) ... 320
4.24.3 PID set point direct setting menu ... 321
4.24.4 3-line monitor selection (Pr. 774 to Pr.776) ... 322

4.25 Parameter clear ... 323

4.26 All parameter clear ... 324

4.27 Parameter copy and parameter verification ... 325

4.27.1 Parameter copy ... 325
4.27.2 Parameter verification ... 326

4.28 Initial value change list ... 327

4.29 Check and clear of the faults history ... 328

5 PROTECTIVE FUNCTIONS 331

5.1 Reset method of protective function ... 332

5.2 List of fault or alarm display ... 333

5.3 Causes and corrective actions ... 334

5.4 Correspondences between digital and actual characters 346

5.5 Check first when you have a trouble 347

5.5.1 Motor does not start 347
5.5.2 Motor or machine is making abnormal acoustic noise 349
5.5.3 Inverter generates abnormal noise 349
5.5.4 Motor generates heat abnormally 349
5.5.5 Motor rotates in the opposite direction 350
5.5.6 Speed greatly differs from the setting 350
5.5.7 Acceleration/deceleration is not smooth 350
5.5.8 Speed varies during operation 351
5.5.9 Operation mode is not changed properly 351
5.5.10 Operation panel (FR-DU07) display is not operating 352
5.5.11 Motor current is too large 352
5.5.12 Speed does not accelerate 353
5.5.13 Unable to write parameter setting 353
5.5.14 Power lamp is not lit 353

6 PRECAUTIONS FOR MAINTENANCE AND INSPECTION 355

6.1 Inspection item 356

6.1.1 Daily inspection 356
6.1.2 Periodic inspection 356
6.1.3 Daily and periodic inspection 357
6.1.4 Display of the life of the inverter parts 358
6.1.5 Checking the inverter and converter modules 358
6.1.6 Cleaning 358
6.1.7 Replacement of parts 359
6.1.8 Inverter replacement 362

6.2 Measurement of main circuit voltages, currents and powers 363

6.2.1 Measurement of voltages and currents 363
6.2.2 Measurement of powers 365
6.2.3 Measurement of voltages and use of PT 365
6.2.4 Measurement of currents 366
6.2.5 Use of CT and transducer 366
6.2.6 Measurement of inverter input power factor 366
6.2.7 Measurement of converter output voltage (across terminals P/+ and N/-) 367
6.2.8 Insulation resistance test using megger 367
6.2.9 Pressure test 367

7 SPECIFICATIONS 369

7.1 Rating 370

7.2 Common specifications 372

7.3 Outline dimension drawings 374

7.4 Heatsink protrusion attachment procedure 384

7.4.1 When using a heatsink protrusion attachment (FR-A7CN) 384

7.4.2 Protrusion of heatsink of the FR-F740-04320 or more 384

APPENDICES 387

Appendix 1 For customers who are replacing the conventional model with this inverter 388

Appendix 1-1 Replacement of the FR-F500 series 388

Appendix 1-2 Replacement of the FR-A100 <EXCELENT> series 389

Appendix 2 Parameter clear, parameter copy and instruction code list 390

Appendix 3 Specification change 400

Appendix 3-1 SERIAL number check 400

Appendix 3-2 Changed functions 400

MEMO

1 OUTLINE

This chapter describes the basic "OUTLINE" for use of this product.
Always read the instructions before using the equipment.

1.1 Product checking and parts identification 2
1.2 Inverter and peripheral devices 3
1.3 Method of removal and reinstallation of the front cover 6
1.4 Installation of the inverter and enclosure design 8

<Abbreviations>

DU	Operation panel (FR-DU07)
PU	Operation panel (FR-DU07) and parameter unit (FR-PU04/FR-PU07(-01))
Inverter	Mitsubishi inverter FR-F700 series
FR-F700	Mitsubishi inverter FR-F700 series
Pr.	Parameter Number (Number assigned to function)
PU operation	Operation using the PU (FR-DU07/FR-PU04/FR-PU07(-01)).
External operation	Operation using the control circuit signals
Combined operation	Combined operation using the PU (FR-DU07/FR-PU04/FR-PU07(-01)) and external operation.
Mitsubishi standard motor	SF-JR
Mitsubishi constant-torque motor	SF-HRCA

<Trademarks>

- Microsoft and Visual C++ are registered trademarks of Microsoft Corporation in the United States and/or other countries.
- LonWorks® is a registered trademark of Echelon Corporation in the U.S.A and other countries.
- DeviceNetTM is a registered trademark of ODVA (Open DeviceNet Vender Association, Inc.).
- BACnet® is a registered trademark of American Society of Heating, Refrigerating and Air-Conditioning Engineers (ASHRAE).
- Other company and product names herein are the trademarks and registered trademarks of their respective owners.

1.1 Product checking and parts identification

Unpack the inverter and check the capacity plate on the front cover and the rating plate on the inverter side face to ensure that the product agrees with your order and the inverter is intact.

- **Inverter Model**

FR - F740 - 00126 - NA

Symbol	Voltage Class
F720	Three-phase 200V class
F740	Three-phase 400V class

Symbol		Model Number
200V class	400V class	
00046 to 04750	00023 to 12120	Represents the rated current

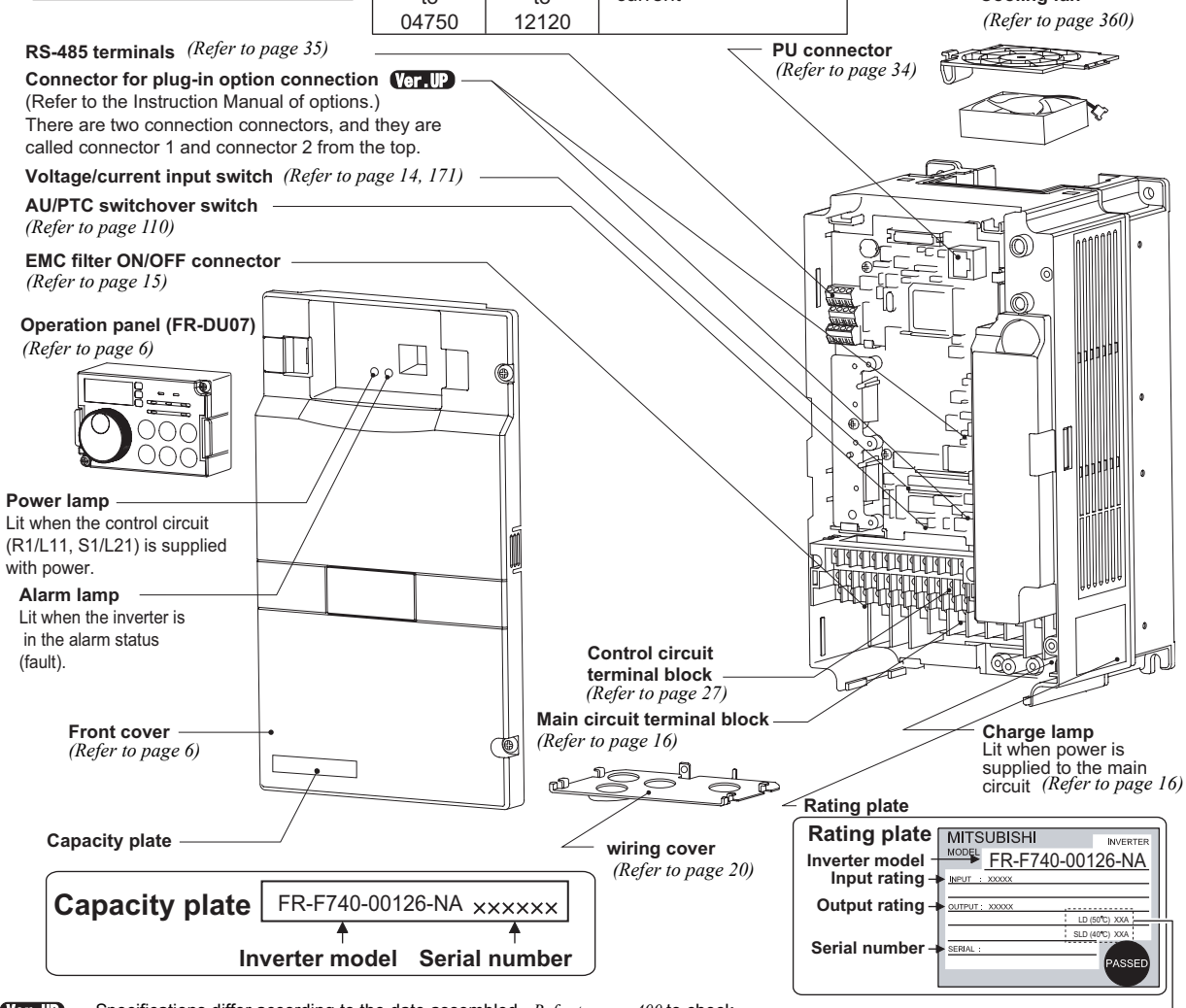

Ver.UP … Specifications differ according to the date assembled. *Refer to page 400* to check the SERIAL number.

	Overload Current Rating	Surrounding Air Temperature
LD	120% 60s, 150% 3s	50℃ (122℉)
SLD	110% 60s, 120% 3s	40℃ (104℉)

- **Accessory**

· **Fan cover fixing screws (FR-F720-01250 (FR-F740-00620) or less) (Refer to *the Installation Guideline*)**

	Capacity	Screw Size (mm)	Number
200V	00105 to 00250	M3 × 35	1
	00340 to 00630	M4 × 40	2
	00770 to 01250	M4 × 50	1
400V	00083, 00126	M3 × 35	1
	00170 to 00380	M4 × 40	2
	00470, 00620	M4 × 50	1

· **DC reactor supplied (FR-F720-03160 (FR-F740-01800) or more)**

· **Eyebolt for hanging the inverter (FR-F720-01540 to 04750, FR-F740-00770 to 06830)**

	Model	Eyebolt Size (mm)	Number
200V	01540	M8	2
	01870 to 04750	M10	2
400V	00770	M8	2
	00930 to 03610	M10	2
	04320 to 06830	M12	2

REMARKS

For removal and reinstallation of covers, refer to *page 6*.

1.2 Inverter and peripheral devices

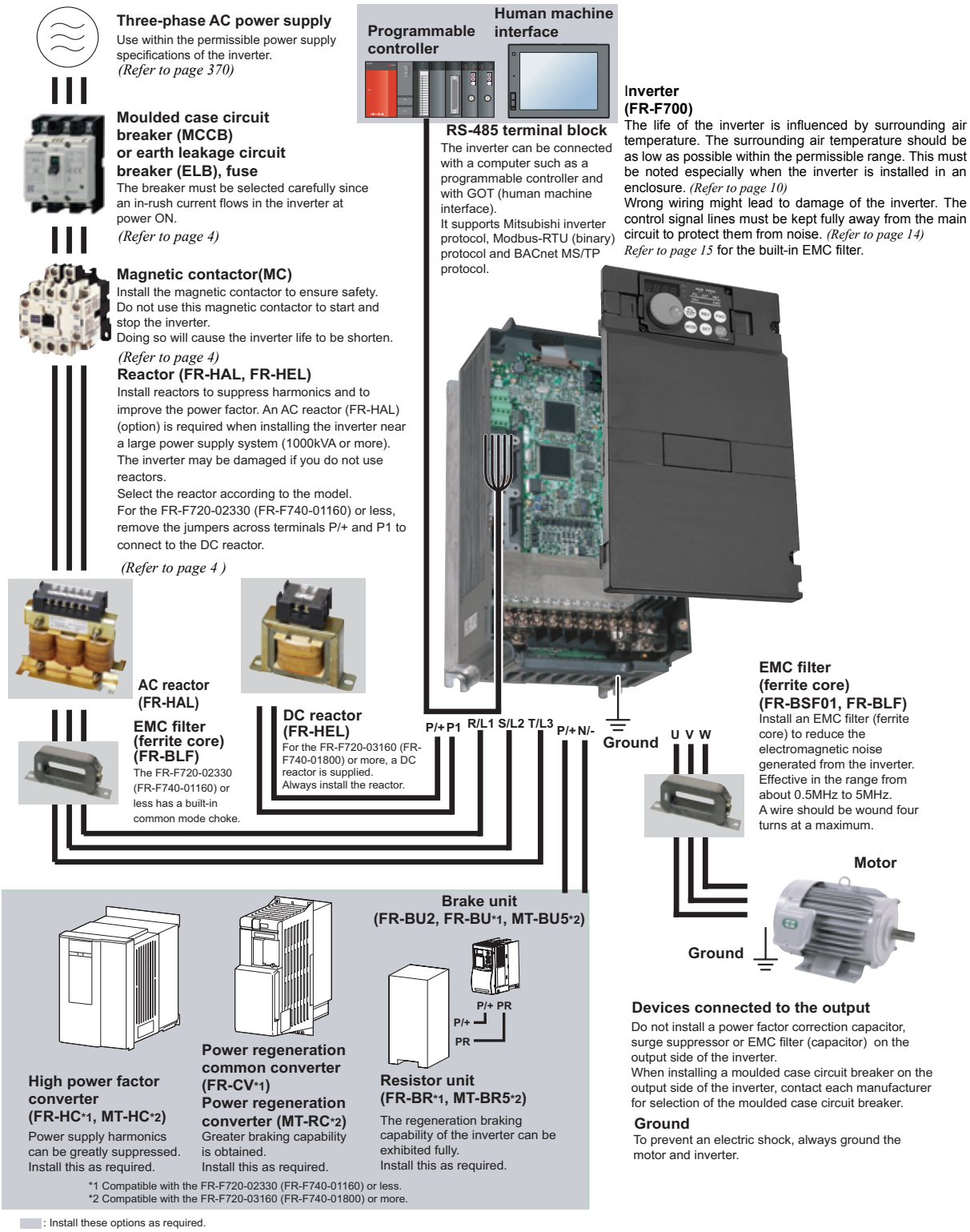

CAUTION

- Do not install a power factor correction capacitor, surge suppressor or capacitor type filter on the inverter output side. This will cause the inverter to trip or the capacitor, and surge suppressor to be damaged. If any of the above devices are connected, immediately remove them.
- Electromagnetic wave interference
  The input/output (main circuit) of the inverter includes high frequency components, which may interfere with the communication devices (such as AM radios) used near the inverter. In this case, set the EMC filter valid to minimize interference.
  (Refer topage 15.)
- Refer to the Instruction Manual of each option and peripheral devices for details of peripheral devices.

1.2.1 Peripheral devices

Check the inverter model of the inverter you purchased. Appropriate peripheral devices must be selected according to the capacity. Refer to the following list and prepare appropriate peripheral devices:

200V class

Motor Output (kW(HP)) *1	Applicable Inverter Model	Breaker Selection *2		Input Side Magnetic Contactor*3	
		Power factor improving (AC or DC) reactor		Power factor improving (AC or DC) reactor	
		Without	with	Without	with
0.75 (1)	FR-F720-00046-NA	10A	10A	S-N10	S-N10
1.5 (2)	FR-F720-00077-NA	15A	15A	S-N10	S-N10
2.2 (3)	FR-F720-00105-NA	20A	15A	S-N10	S-N10
3.7 (5)	FR-F720-00167-NA	30A	30A	S-N20, S-N21	S-N10
5.5 (7.5)	FR-F720-00250-NA	50A	40A	S-N25	S-N20, S-N21
7.5 (10)	FR-F720-00340-NA	60A	50A	S-N25	S-N25
11 (15)	FR-F720-00490-NA	75A	75A	S-N35	S-N35
15 (20)	FR-F720-00630-NA	125A	100A	S-N50	S-N50
18.5 (25)	FR-F720-00770-NA	150A	125A	S-N65	S-N50
22 (30)	FR-F720-00930-NA	175A	150A	S-N80	S-N65
30 (40)	FR-F720-01250-NA	225A	175A	S-N95	S-N80
37 (50)	FR-F720-01540-NA	250A	225A	S-N150	S-N125
45 (60)	FR-F720-01870-NA	300A	300A	S-N180	S-N150
55 (75)	FR-F720-02330-NA	400A	350A	S-N220	S-N180
75 (100)	FR-F720-03160-NA	—	400A	—	S-N300
90 (125)	FR-F720-03800-NA	—	400A	—	S-N300
110 (150)	FR-F720-04750-NA	—	500A	—	S-N400

*1 Selections for use of the Mitsubishi 4-pole standard motor with power supply voltage of 200VAC 50Hz.

*2 Select the MCCB according to the power supply capacity.
Install one MCCB per inverter.
For using commercial-power supply operation, select a breaker with capacity which allows the motor to be directly power supplied.
For the use in the United States or Canada, provide the appropriate UL and cUL listed Class RK5, Class T or Class L type fuse or UL 489 molded case circuit breaker (MCCB) that is suitable for branch circuit protection.
(Refer to the Installation Guideline.)

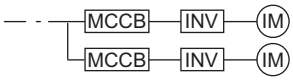

*3 Magnetic contactor is selected based on the AC-1 class. The electrical durability of magnetic contactor is 500,000 times. When the magnetic contactor is used for emergency stop during motor driving, the electrical durability is 25 times.
When using the MC for emergency stop during motor driving or using on the motor side during commercial-power supply operation, select the MC with class AC-3 rated current for the motor rated current.

CAUTION

- When the inverter capacity is larger than the motor capacity, select an MCCB and a magnetic contactor according to the inverter model and cable and reactor according to the motor output.
- When the breaker on the inverter primary side trips, check for the wiring fault (short circuit), damage to internal parts of the inverter, etc. Identify the cause of the trip, then remove the cause and power ON the breaker.

400V class

Motor Output (kW(HP)) *1	Applicable Inverter Model	Breaker Selection *2		Input Side Magnetic Contactor*3	
		Power factor improving (AC or DC) reactor		Power factor improving (AC or DC) reactor	
		Without	with	Without	with
0.75 (1)	FR-F740-00023-NA	5A	5A	S-N10	S-N10
1.5 (2)	FR-F740-00038-NA	10A	10A	S-N10	S-N10
2.2 (3)	FR-F740-00052-NA	10A	10A	S-N10	S-N10
3.7 (5)	FR-F740-00083-NA	20A	15A	S-N10	S-N10
5.5 (7.5)	FR-F740-00126-NA	30A	20A	S-N20, S-N21	S-N11, S-N12
7.5 (10)	FR-F740-00170-NA	30A	30A	S-N20, S-N21	S-N20, S-N21
11 (15)	FR-F740-00250-NA	50A	40A	S-N20, S-N21	S-N20, S-N21
15 (20)	FR-F740-00310-NA	60A	50A	S-N25	S-N20, S-N21
18.5 (25)	FR-F740-00380-NA	75A	60A	S-N25	S-N25
22 (30)	FR-F740-00470-NA	100A	75A	S-N35	S-N25
30 (40)	FR-F740-00620-NA	125A	100A	S-N50	S-N50
37 (50)	FR-F740-00770-NA	150A	125A	S-N65	S-N50
45 (60)	FR-F740-00930-NA	175A	150A	S-N80	S-N65
55 (75)	FR-F740-01160-NA	200A	175A	S-N80	S-N80
75 (100)	FR-F740-01800-NA	—	225A	—	S-N95
90 (125)	FR-F740-01800-NA	—	225A	—	S-N150
110 (150)	FR-F740-02160-NA	—	225A	—	S-N180
132 (200)	FR-F740-02600-NA	—	400A	—	S-N220
160 (250)	FR-F740-03250-NA	—	400A	—	S-N300
185 (300)	FR-F740-03610-NA	—	400A	—	S-N300
220 (350)	FR-F740-04320-NA	—	500A	—	S-N400
250 (400)	FR-F740-04810-NA	—	600A	—	S-N600
280 (450)	FR-F740-05470-NA	—	600A	—	S-N600
315 (500)	FR-F740-06100-NA	—	700A	—	S-N600
355 (550)	FR-F740-06830-NA	—	800A	—	S-N600
400 (600)	FR-F740-07700-NA	—	900A	—	S-N800
450 (700)	FR-F740-08660-NA	—	1000A	—	1000A Rated product
500 (750)	FR-F740-09620-NA	—	1200A	—	1000A Rated product
560 (800)	FR-F740-10940-NA	—	1500A	—	1200A Rated product
630 (850)	FR-F740-12120-NA	—	2000A	—	1400A Rated product

*1 Selections for use of the Mitsubishi 4-pole standard motor with power supply voltage of 400VAC 50Hz.

*2 Select the MCCB according to the power supply capacity.
Install one MCCB per inverter.
For using commercial-power supply operation, select a breaker with capacity which allows the motor to be directly power supplied.
For the use in the United States or Canada, provide the appropriate UL and cUL listed Class RK5, Class T or Class L type fuse or UL 489 molded case circuit breaker (MCCB) that is suitable for branch circuit protection.
(Refer to the Installation Guideline.)

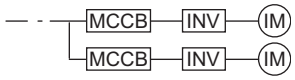

*3 Magnetic contactor is selected based on the AC-1 class. The electrical durability of magnetic contactor is 500,000 times. When the magnetic contactor is used for emergency stop during motor driving, the electrical durability is 25 times.
When using the MC for emergency stop during motor driving or using on the motor side during commercial-power supply operation, select the MC with class AC-3 rated current for the motor rated current.

CAUTION

- When the inverter capacity is larger than the motor capacity, select an MCCB and a magnetic contactor according to the inverter model and cable and reactor according to the motor output.
- When the breaker on the inverter primary side trips, check for the wiring fault (short circuit), damage to internal parts of the inverter, etc. Identify the cause of the trip, then remove the cause and power ON the breaker.

1.3 Method of removal and reinstallation of the front cover

•Removal of the operation panel

1) Loosen the two screws on the operation panel. (These screws cannot be removed.)

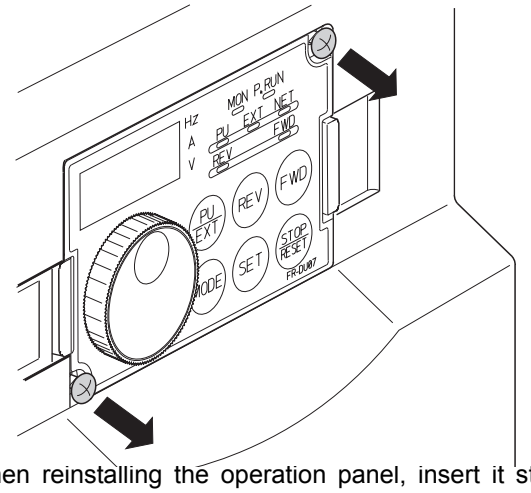

2) Push the left and right hooks of the operation panel and pull the operation panel toward you to remove.

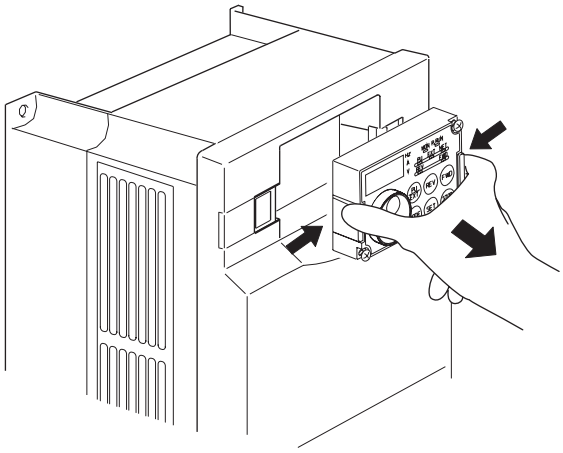

When reinstalling the operation panel, insert it straight to reinstall securely and tighten the fixed screws of the operation panel.

FR-F720-01250-NA or less, FR-F740-00620-NA or less

•Removal

1) Loosen the installation screws of the front cover.

2) Pull the front cover toward you to remove by pushing an installation hook using left fixed hooks as supports.

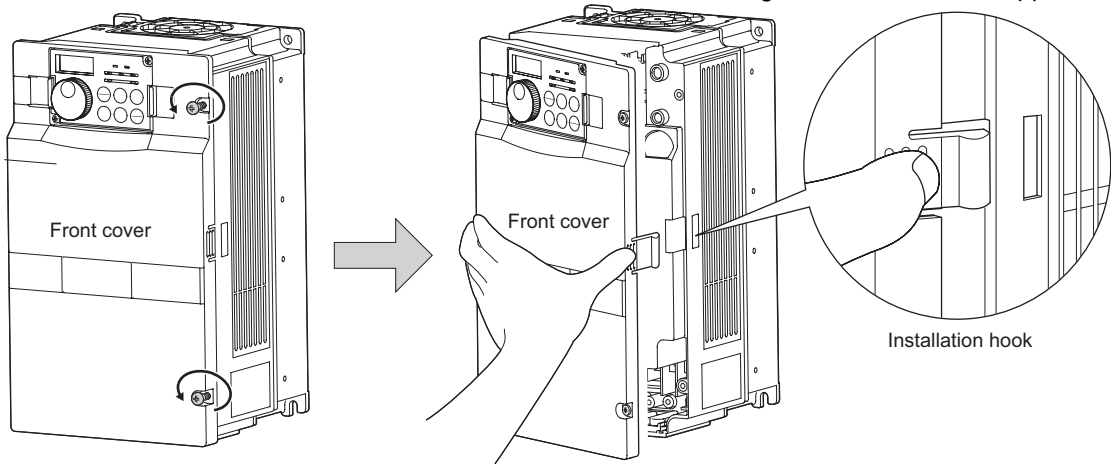

•Reinstallation

1) Insert the two fixed hooks on the left side of the front cover into the sockets of the inverter.

2) Using the fixed hooks as supports, securely press the front cover against the inverter. (Although installation can be done with the operation panel mounted, make sure that a connector is securely fixed.)

3) Tighten the installation screws and fix the front cover.

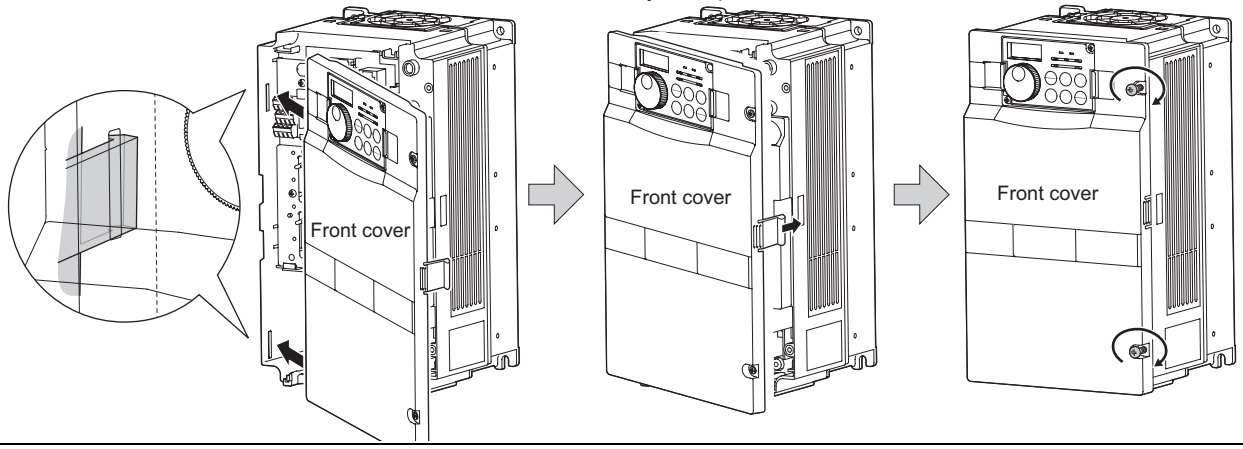

FR-F720-01540-NA or more, FR-F740-00770-NA or more

•Removal

1) Remove installation screws on the front cover 1 to remove the front cover 1.
2) Loosen the installation screws of the front cover 2.
3) Pull the front cover 2 toward you to remove by pushing an installation hook on the right side using left fixed hooks as supports.

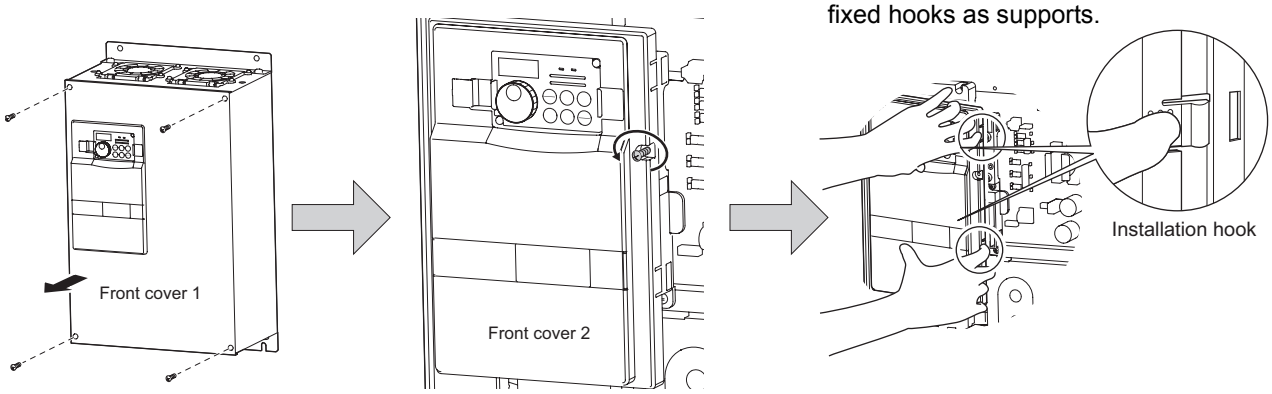

•Reinstallation

1) Insert the two fixed hooks on the left side of the front cover 2 into the sockets of the inverter.
2) Using the fixed hooks as supports, securely press the front cover 2 against the inverter. (Although installation can be done with the operation panel mounted, make sure that a connector is securely fixed.)

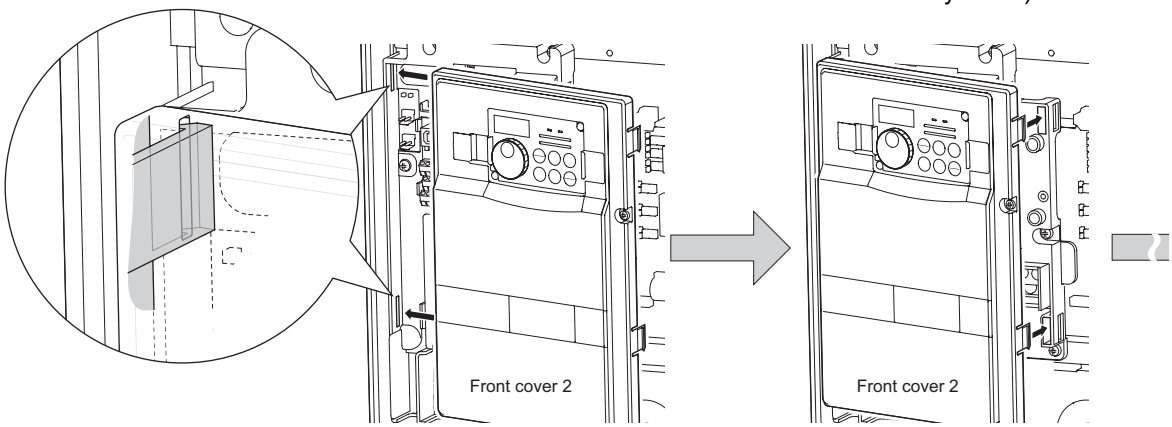

3) Fix the front cover 2 with the installation screws.
4) Fix the front cover 1 with the installation screws.

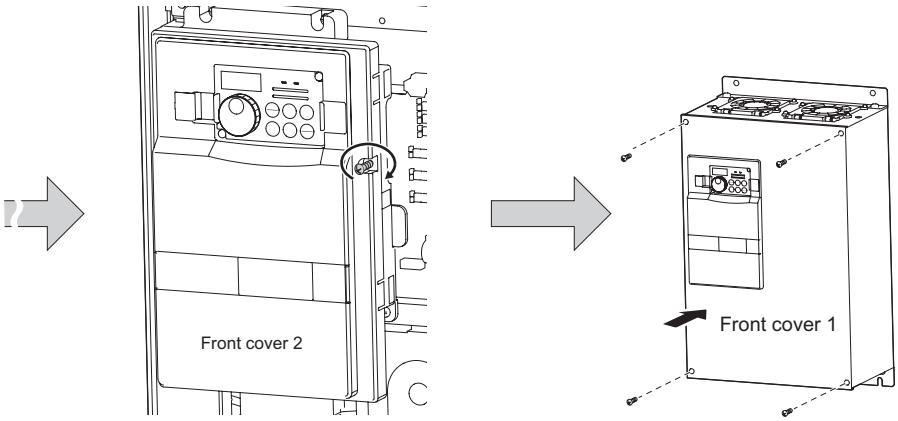

REMARKS

- For the FR-F740-04320 or more, the front cover 1 is separated into two parts.

CAUTION

1. Fully make sure that the front cover has been reinstalled securely. Always tighten the installation screws of the front cover.
2. The same serial number is printed on the capacity plate of the front cover and the rating plate of the inverter. Before reinstalling the front cover, check the serial numbers to ensure that the cover removed is reinstalled to the inverter from where it was removed.

1.4 Installation of the inverter and enclosure design

When an inverter enclosure is to be designed and manufactured, heat generated by contained equipment, etc., the environment of an operating place, and others must be fully considered to determine the enclosure structure, size and equipment layout. The inverter unit uses many semiconductor devices. To ensure higher reliability and long period of operation, operate the inverter in the ambient environment that completely satisfies the equipment specifications.

1.4.1 Inverter installation environment

As the inverter installation environment should satisfy the standard specifications indicated in the following table, operation in any place that does not meet these conditions not only deteriorates the performance and life of the inverter, but also causes a failure. Refer to the following points and take adequate measures.

Environmental standard specifications of inverter

Item	Description	
Surrounding air temperature	LD	-10 to +50°C (14°F to 122°F) (non-freezing)
	SLD(Initial setting)	-10 to +40°C (14°F to 104°F) (non-freezing)
Ambient humidity	90% RH maximum (non-condensing)	
Atmosphere	Free from corrosive and explosive gases, dust and dirt	
Maximum Altitude	1,000m (3280.80 feet) or less	
Vibration	5.9m/s^2 or less *1 at 10 to 55Hz (directions of X, Y, Z axes)	

*1 2.9m/s^2 or less for the FR-F740-04320 or more.

(1) Temperature

The permissible surrounding air temperature of the inverter is -10°C (14°F) to +50°C (122°F) (when LD is set) or -10°C (14°F) to +40°C (104°F) (when SLD is set). Always operate the inverter within this temperature range. Operation outside this range will considerably shorten the service lives of the semiconductors, parts, capacitors and others. Take the following measures so that the surrounding air temperature of the inverter falls within the specified range.

1) Measures against high temperature
- Use a forced ventilation system or similar cooling system. *(Refer to page 10.)*
- Install the enclosure in an air-conditioned electrical chamber.
- Block direct sunlight.
- Provide a shield or similar plate to avoid direct exposure to the radiated heat and wind of a heat source.
- Ventilate the area around the enclosure well.

2) Measures against low temperature
- Provide a space heater in the enclosure.
- Do not power OFF the inverter. (Keep the start signal of the inverter OFF.)

3) Sudden temperature changes
- Select an installation place where temperature does not change suddenly.
- Avoid installing the inverter near the air outlet of an air conditioner.
- If temperature changes are caused by opening/closing of a door, install the inverter away from the door.

(2) Humidity

Normally operate the inverter within the 45 to 90% range of the ambient humidity. Too high humidity will pose problems of reduced insulation and metal corrosion. On the other hand, too low humidity may produce a spatial electrical breakdown. The insulation distance specified in JEM1103 "Control Equipment Insulator" is defined as humidity 45 to 85%.

1) Measures against high humidity
- Make the enclosure enclosed, and provide it with a hygroscopic agent.
- Take dry air into the enclosure from outside.
- Provide a space heater in the enclosure.

2) Measures against low humidity
What is important in fitting or inspection of the unit in this status is to discharge your body (static electricity) beforehand and keep your body from contact with the parts and patterns, besides blowing air of proper humidity into the enclosure from outside.

3) Measures against condensation
Condensation may occur if frequent operation stops change the in-enclosure temperature suddenly or if the outside-air temperature changes suddenly.
Condensation causes such faults as reduced insulation and corrosion.
- Take the measures against high humidity in 1).
- Do not power OFF the inverter. (Keep the start signal of the inverter OFF.)

(3) Dust, dirt, oil mist

Dust and dirt will cause such faults as poor contact of contact points, reduced insulation or reduced cooling effect due to moisture absorption of accumulated dust and dirt, and in-enclosure temperature rise due to clogged filter.
In the atmosphere where conductive powder floats, dust and dirt will cause such faults as malfunction, deteriorated insulation and short circuit in a short time.
Since oil mist will cause similar conditions, it is necessary to take adequate measures.

Countermeasures
- Place in a totally enclosed enclosure.
  Take measures if the in-enclosure temperature rises. *(Refer to page 10.)*
- Purge air.
  Pump clean air from outside to make the in-enclosure pressure higher than the outside-air pressure.

(4) Corrosive gas, salt damage

If the inverter is exposed to corrosive gas or to salt near a beach, the printed board patterns and parts will corrode or the relays and switches will result in poor contact.
In such places, take the measures given in Section (3).

(5) Explosive, flammable gases

As the inverter is non-explosion proof, it must be contained in an explosion proof enclosure.
In places where explosion may be caused by explosive gas, dust or dirt, an enclosure cannot be used unless it structurally complies with the guidelines and has passed the specified tests. This makes the enclosure itself expensive (including the test charges).
The best way is to avoid installation in such places and install the inverter in a non-hazardous place.

(6) Highland

Use the inverter at the altitude of within 1000m (3280.80 feet).
If it is used at a higher place, it is likely that thin air will reduce the cooling effect and low air pressure will deteriorate dielectric strength.

(7) Vibration, impact

The vibration resistance of the inverter is up to 5.9m/s^2 (2.9m/s^2 for the FR-F740-04320 or more) at 10 to 55Hz frequency (directions of X, Y, Z axes) and 1mm (0.04 inches) amplitude.
Vibration or impact, if less than the specified value, applied for a long time may make the mechanism loose or cause poor contact to the connectors.
Especially when impact is imposed repeatedly, caution must be taken as the part pins are likely to break.

Countermeasures
- Provide the enclosure with rubber vibration isolators.
- Strengthen the structure to prevent the enclosure from resonance.
- Install the enclosure away from sources of vibration.

1.4.2 Cooling system types for inverter enclosure

From the enclosure that contains the inverter, the heat of the inverter and other equipment (transformers, lamps, resistors, etc.) and the incoming heat such as direct sunlight must be dissipated to keep the in-enclosure temperature lower than the permissible temperatures of the in-enclosure equipment including the inverter.
The cooling systems are classified as follows in terms of the cooling calculation method.

1) Cooling by natural heat dissipation from the enclosure surface (Totally enclosed type)
2) Cooling by heat sink (Aluminum fin, etc.)
3) Cooling by ventilation (Forced ventilation type, pipe ventilation type)
4) Cooling by heat exchanger or cooler (Heat pipe, cooler, etc.)

Cooling System		Enclosure Structure	Comment
Natural cooling	Natural ventilation (Enclosed, open type)	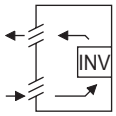	Low in cost and generally used, but the enclosure size increases as the inverter capacity increases. For relatively small capacities.
	Natural ventilation (Totally enclosed type)	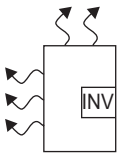	Being a totally enclosed type, the most appropriate for hostile environment having dust, dirt, oil mist, etc. The enclosure size increases depending on the inverter capacity.
Forced cooling	Heatsink cooling	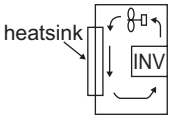	Having restrictions on the heatsink mounting position and area, and designed for relative small capacities.
	Forced ventilation	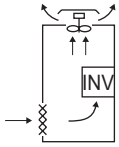	For general indoor installation. Appropriate for enclosure downsizing and cost reduction, and often used.
	Heat pipe	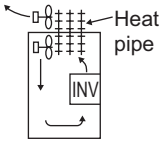	Totally enclosed type for enclosure downsizing.

1.4.3 Inverter placement

(1) Installation of the Inverter

Installation on the enclosure

FR-F720-01250 or less
FR-F740-00620 or less

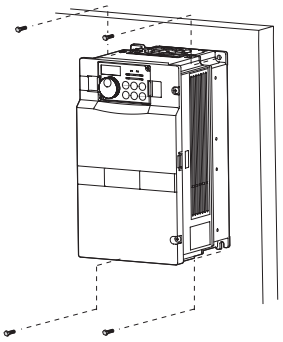

FR-F720-01540 or more
FR-F740-00770 or more

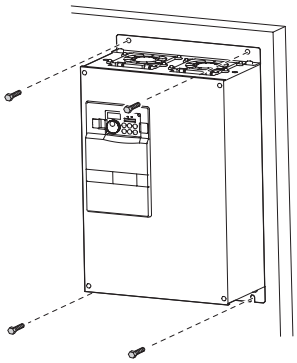

Fix six positions for the FR-F740-04320 to 08660 and fix eight positions for the FR-F740-09620 to 12120.

CAUTION

When encasing multiple inverters, install them in parallel as a cooling measure. Install the inverter vertically.

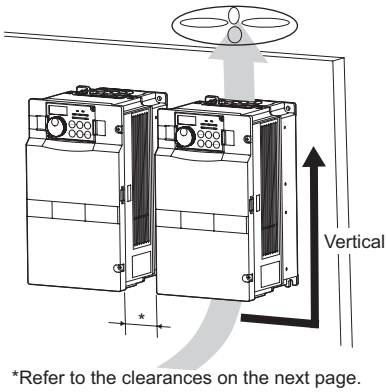

*Refer to the clearances on the next page.

(2) Clearances around the inverter

To ensure ease of heat dissipation and maintenance, leave at least the shown clearances around the inverter. At least the following clearances are required under the inverter as a wiring space, and above the inverter as a heat dissipation space.

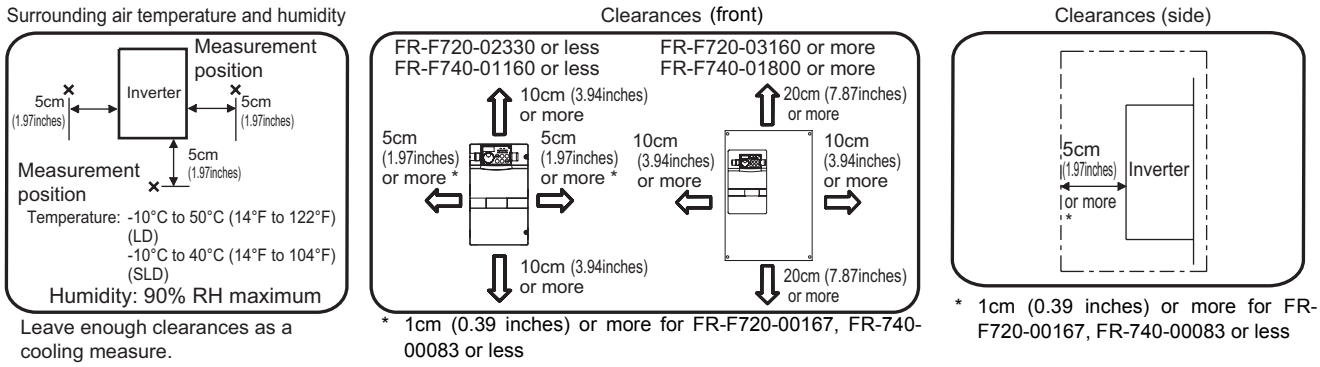

REMARKS

- For replacing the cooling fan of the FR-F740-04320 or more, 30cm(11.8 inches) of space is necessary in front of the inverter. Refer to *page 360* for fan replacement.

(3) Inverter mounting orientation

Mount the inverter on a wall as specified. Do not mount it horizontally or any other way.

(4) Above the inverter

Heat is blown up from inside the inverter by the small fan built in the unit. Any equipment placed above the inverter should be heat resistant.

(5) Arrangement of multiple inverters

When multiple inverters are placed in the same enclosure, generally arrange them horizontally as shown in the right figure (a). When it is inevitable to arrange them vertically to minimize space, take such measures as to provide guides since heat from the bottom inverters can increase the temperatures in the top inverters, causing inverter failures.

When mounting multiple inverters, fully take caution not to make the surrounding air temperature of the inverter higher than the permissible value by providing ventilation and increasing the enclosure size.

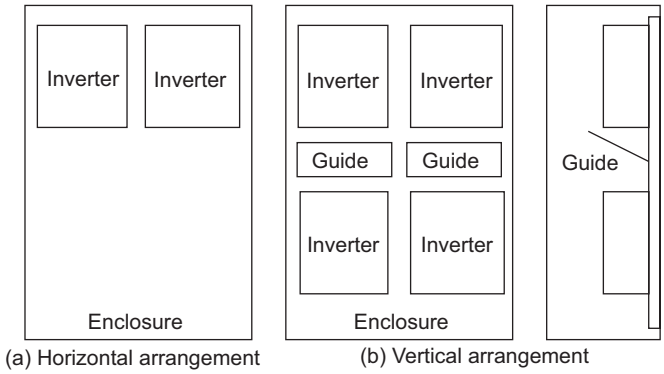

(a) Horizontal arrangement (b) Vertical arrangement

Arrangement of multiple inverters

(6) Placement of ventilation fan and inverter

Heat generated in the inverter is blown up from the bottom of the unit as warm air by the cooling fan. When installing a ventilation fan for that heat, determine the place of ventilation fan installation after fully considering an air flow. (Air passes through areas of low resistance. Make an airway and airflow plates to expose the inverter to cool air.)

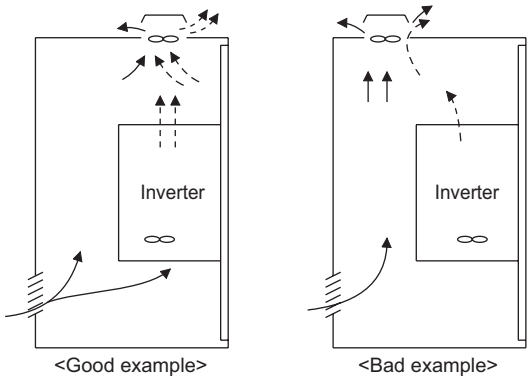

Placement of ventilation fan and inverter

MEMO

2 WIRING

This chapter explains the basic "WIRING" for use of this product.
Always read the instructions before using the equipment.

2.1 Wiring 14
2.2 Main circuit terminal specifications 16
2.3 Control circuit specifications 27
2.4 Connection of stand-alone option units 36

2.1 Wiring

2.1.1 Terminal connection diagram

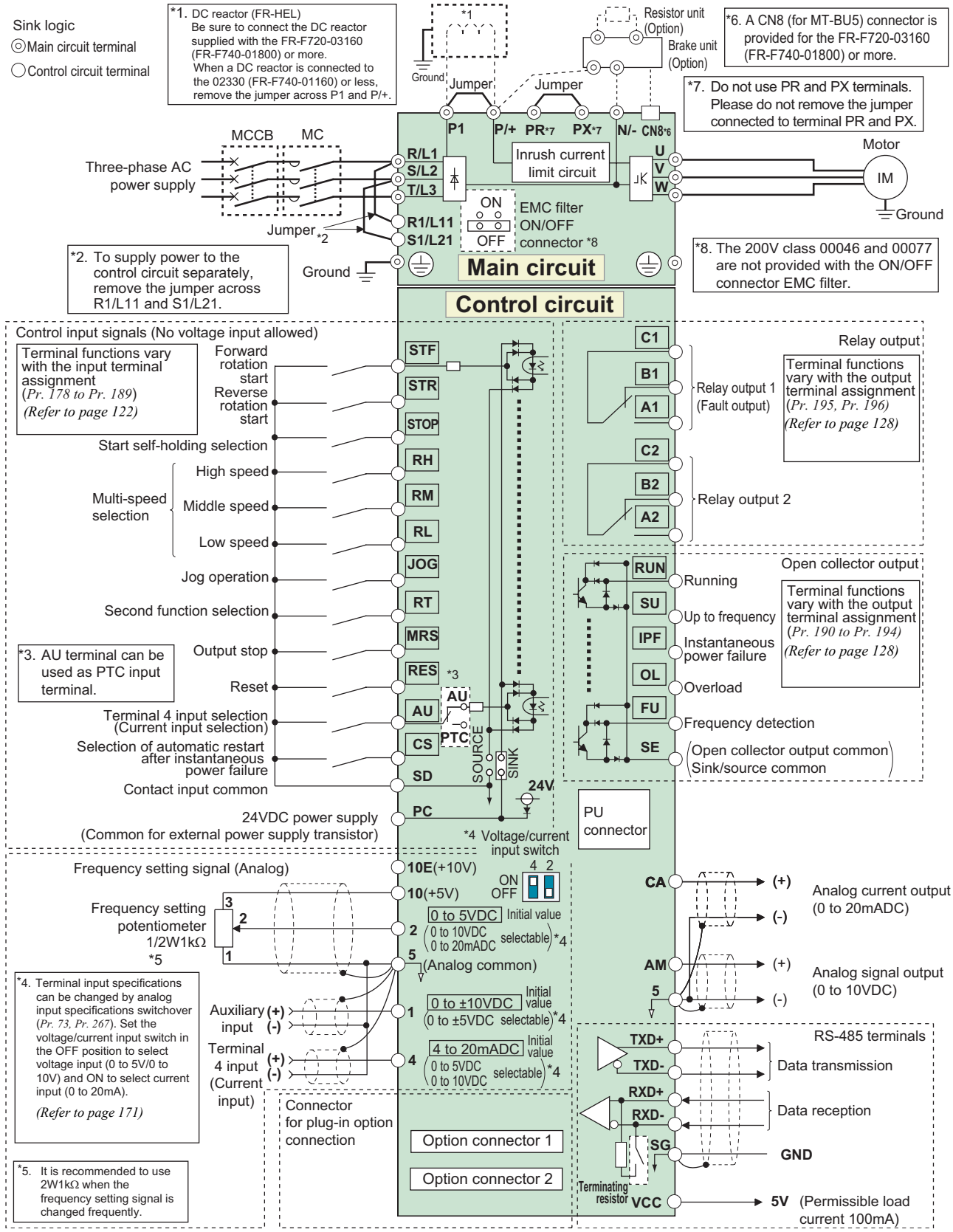

CAUTION

- To prevent a malfunction due to noise, keep the signal cables more than 10cm (3.94inches) away from the power cables. Also separate the main circuit wire of the input side and the output side.
- After wiring, wire offcuts must not be left in the inverter.
  Wire offcuts can cause an alarm, failure or malfunction. Always keep the inverter clean.
  When drilling mounting holes in an enclosure etc. take care not to allow chips and other foreign matter to enter the inverter.
- Set the voltage/current input switch correctly. Operation with a wrong setting may cause a fault, failure or malfunction.

2.1.2 EMC filter

This inverter is equipped with a built-in EMC filter (capacitive filter) and common mode choke.
The EMC filter is effective for reduction of air-propagated noise on the input side of the inverter.
The EMC filter is factory-set to disable (OFF). To enable it, fit the EMC filter ON/OFF connector to the ON position.
The input side common mode choke, built-in the FR-F720-02330(FR-F740-01160) or less inverter, is always valid regardless of ON/OFF of the EMC filter ON/OFF connector.

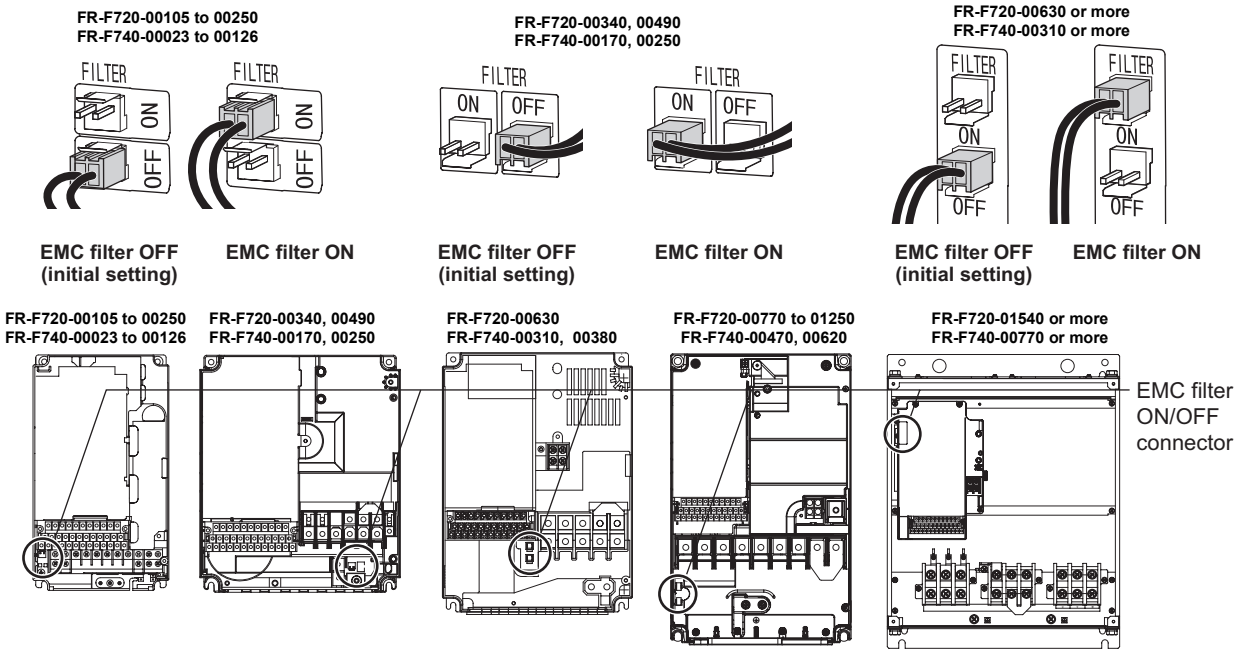

The FR-F720-00046 and 00077 are not provided with the EMC filter ON/OFF connector. (Always ON)

<How to disconnect the connector>

(1) Before removing a front cover, check to make sure that the indication of the inverter operation panel is OFF, wait for at least 10 minutes after the power supply has been switched OFF, and check that there are no residual voltage using a tester or the like. (For the front cover removal method, refer to *page 6.*)

(2) When disconnecting the connector, push the fixing tab and pull the connector straight without pulling the cable or forcibly pulling the connector with the tab fixed. When installing the connector, also engage the fixing tab securely. If it is difficult to disconnect the connector, use a pair of long-nose pliers, etc.

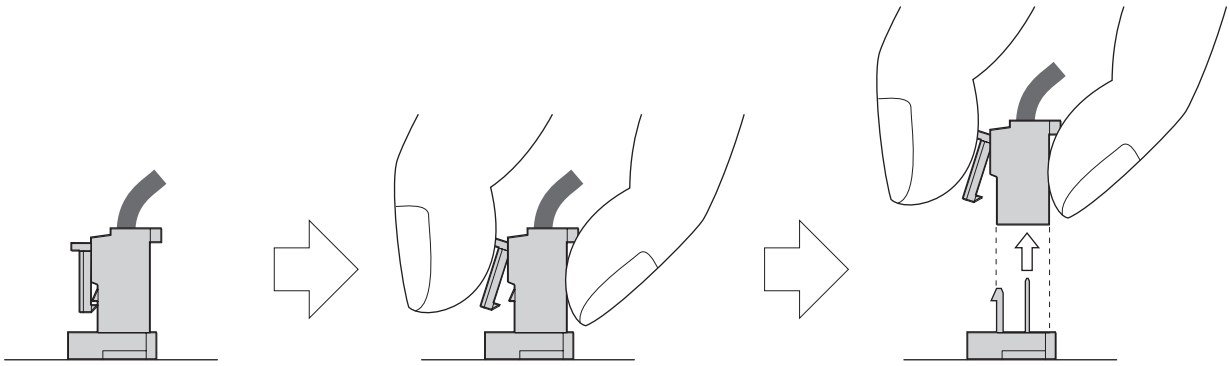

EMC filter ON/OFF connector (Side view) — Disengage connector fixing tab — With tab disengaged, pull up connector straight.

CAUTION

- Fit the connector to either ON or OFF.
- Enabling (turning ON) the EMC filter increase leakage current. *(Refer to page 47)*

⚠ WARNING

⚠ While power is ON or when the inverter is running, do not open the front cover. Otherwise you may get an electric shock.

2.2 Main circuit terminal specifications

2.2.1 Specification of main circuit terminal

Terminal Symbol	Terminal Name	Description	Refer to page
R/L1, S/L2, T/L3	**AC power input**	Connect to the commercial power supply. Keep these terminals open when using the high power factor converter (FR-HC, MT-HC) or power regeneration common converter (FR-CV).	16
U, V, W	**Inverter output**	Connect a three-phase squirrel-cage motor.	16
R1/L11, S1/L21	**Power supply for control circuit**	Connected to the AC power supply terminals R/L1 and S/L2. To retain the fault display and fault output or when using the high power factor converter (FR-HC, MT-HC) or power regeneration common converter (FR-CV), remove the jumpers from terminals R/L1 and R1/L11, and S/L2 and S1/L21 and apply external power to these terminals. The power capacity necessary when separate power is supplied from R1/L11 and S1/L21 differs according to the inverter capacity. **200V class**: FR-F720-00630 or less 60VA; FR-F720-00770 80VA; FR-F720-00930 or more 80VA **400V class**: FR-F740-00310 or less 60VA; FR-F740-00380 60VA; FR-F740-00470 or more 80VA	25
P/+, N/-	**Brake unit connection**	Connect the brake unit (FR-BU2, FR-BU, BU and MT-BU5), power regeneration common converter (FR-CV), high power factor converter (FR-HC and MT-HC) or power regeneration converter (MT-RC).	36
P/+, P1	**DC reactor connection**	For the FR-F720-02330 (FR-F740-01160) or less, remove the jumper across terminals P/+ and P1 and connect the DC reactor. (Be sure to connect the DC reactor supplied with the FR-F720-03160 (FR-F740-01800) or more.) When a DC reactor is not connected, the jumper across terminals P/+ and P1 should not be removed.	44
PR, PX	Please do not remove or use terminals PR and PX or the jumper connected.		-
⏚	**Earth (ground)**	For earthing (grounding) the inverter chassis. Must be earthed (grounded).	23

2.2.2 Terminal arrangement of the main circuit terminal, power supply and the motor wiring

200V class

FR-F720-00046, 00077-NA

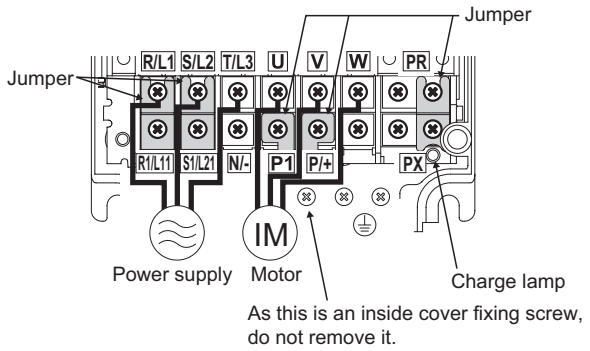

FR-F720-00105 to 00250-NA

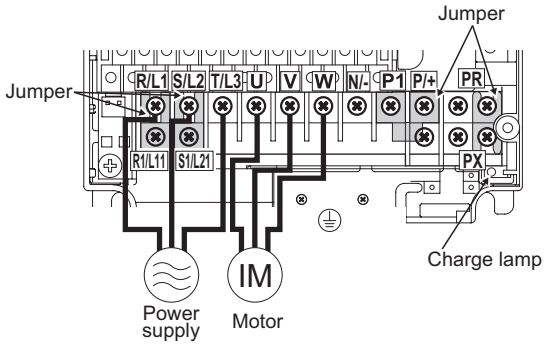

FR-F720-00340, 00490-NA

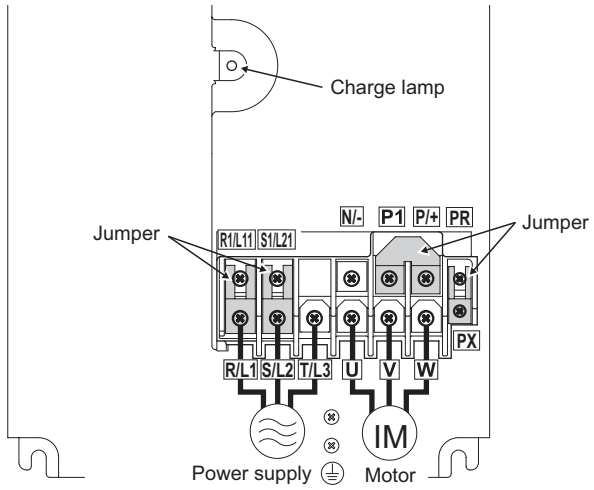

FR-F720-00630-NA

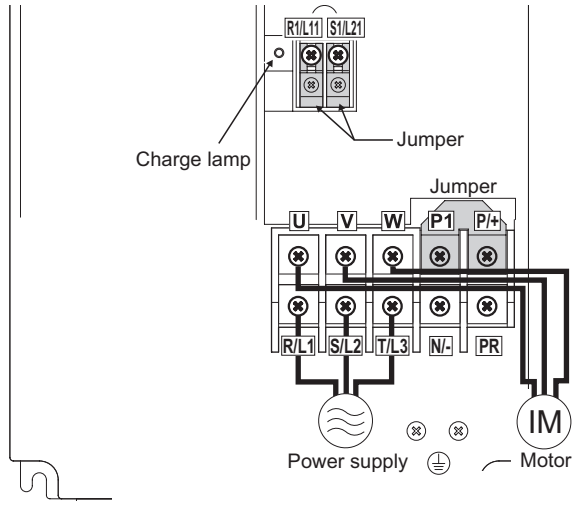

FR-F720-00770 to 01250-NA

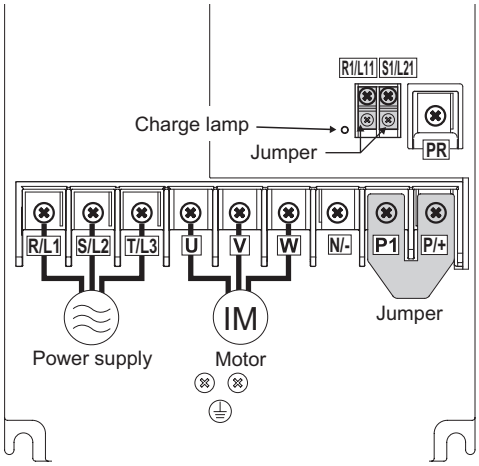

FR-F720-01540 to 02330-NA

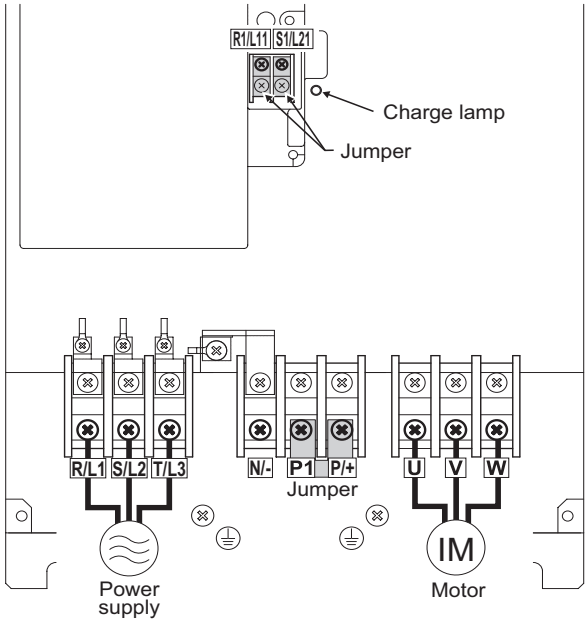

FR-F720-03160 to 04750-NA

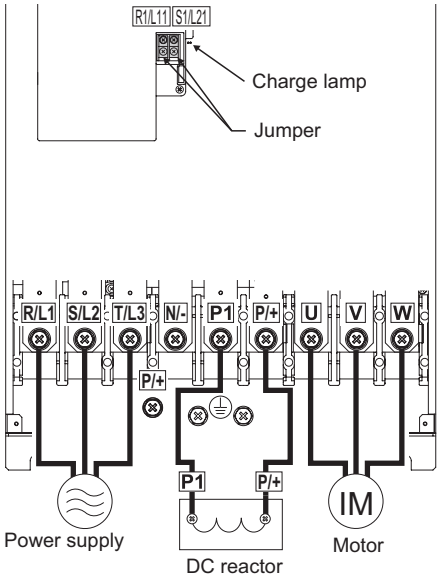

400V class

FR-F740-00023 to 00126-NA

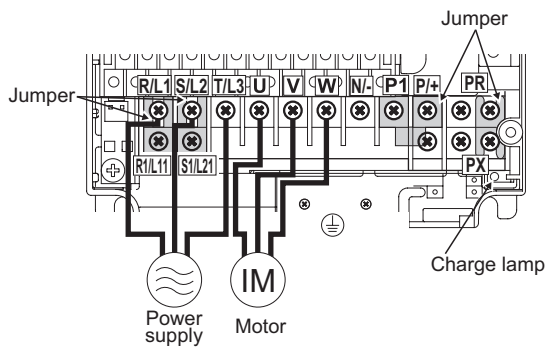

FR-F740-00170, 00250-NA

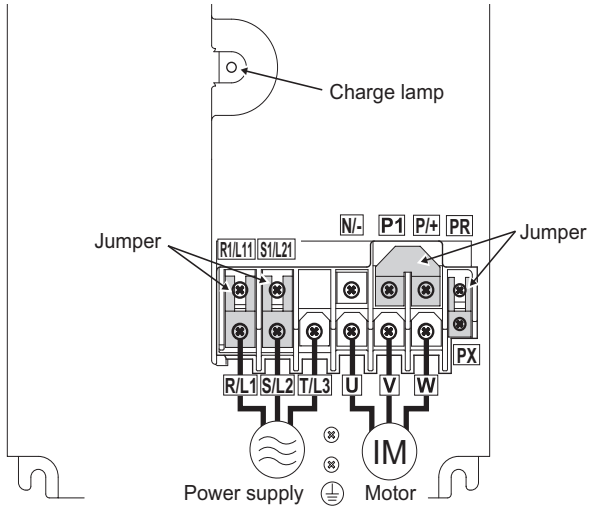

FR-F740-00310, 00380-NA

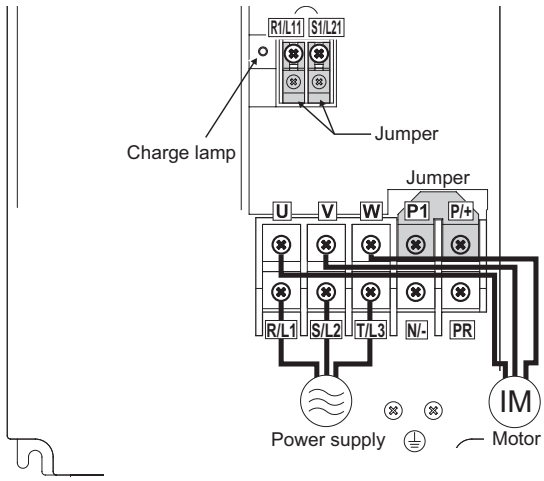

FR-F740-00470, 00620-NA

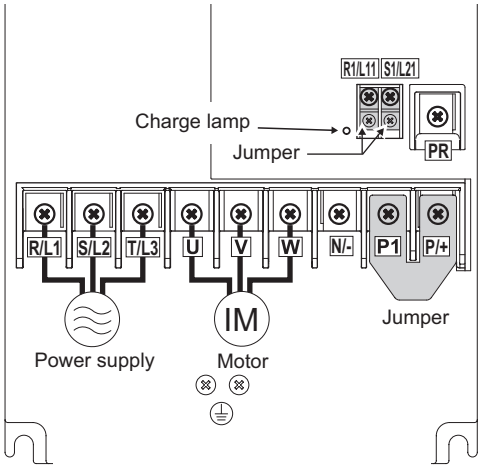

FR-F740-00770 to 01160-NA

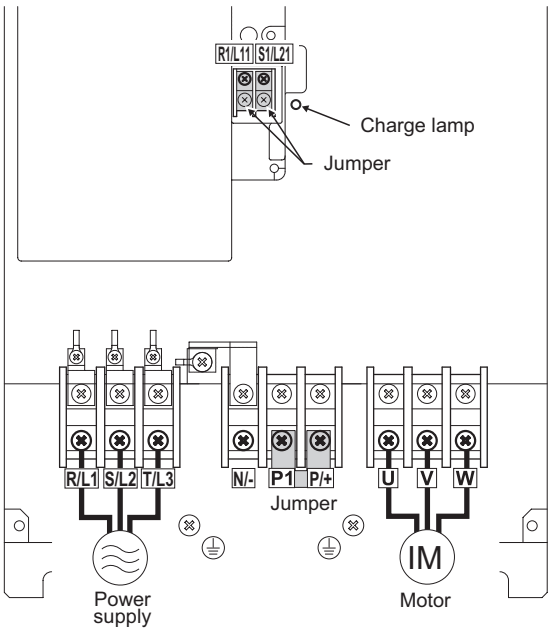

FR-F740-01800 to 02600-NA

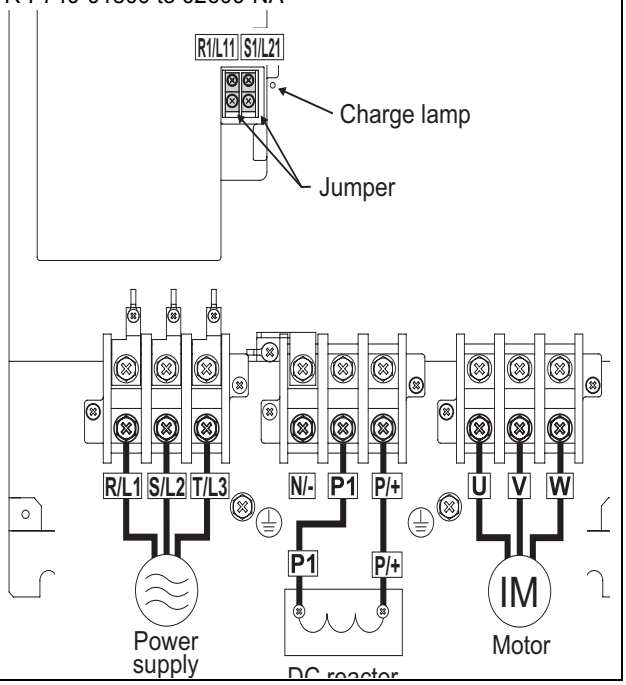

FR-F740-03250 to 04810-NA	FR-F740-05470 to 12120-NA
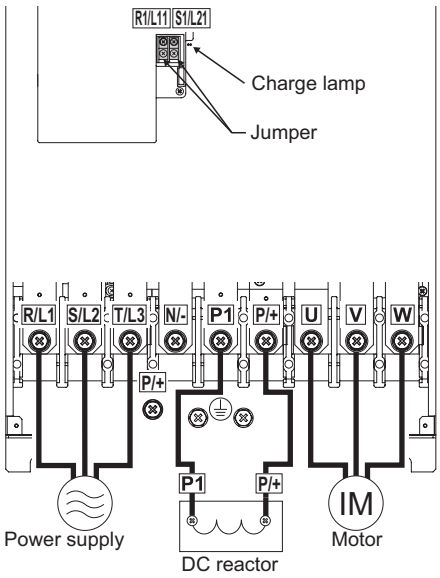	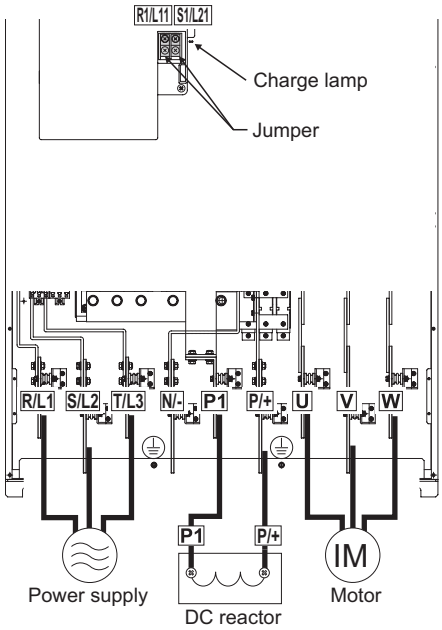

CAUTION

- The power supply cables must be connected to R/L1, S/L2, T/L3. (Phase sequence needs not to be matched.) Never connect the power cable to the U, V, W of the inverter. Doing so will damage the inverter.
- Connect the motor to U, V, W. At this time, turning ON the forward rotation switch (signal) rotates the motor in the counterclockwise direction when viewed from the motor shaft.
- When wiring the inverter main circuit conductor of the FR-F740-05470 or more, tighten a nut from the right side of the conductor. When wiring two wires, place wires on both sides of the conductor. (Refer to the drawing below.) For wiring, use bolts (nuts) provided with the inverter.

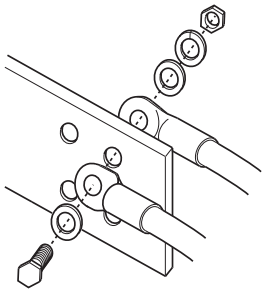

Wiring cover and Handling (FR-F720-00930 (FR-F740-00620) or less)

1) Remove the wiring cover of the inverter. Punch out a knockout by firmly tapping it with such as a hammer. Remove any sharp edges and burrs from knockout holes of the wiring cover.

2) Install conduits and fix with conduits clamps. Pass the cable always through the conduit.

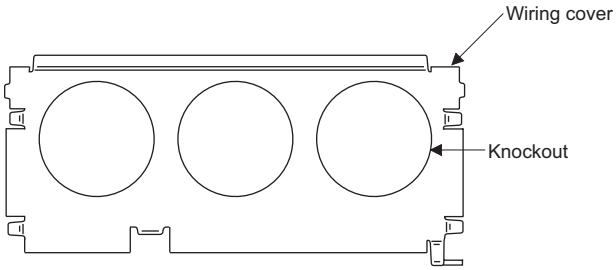

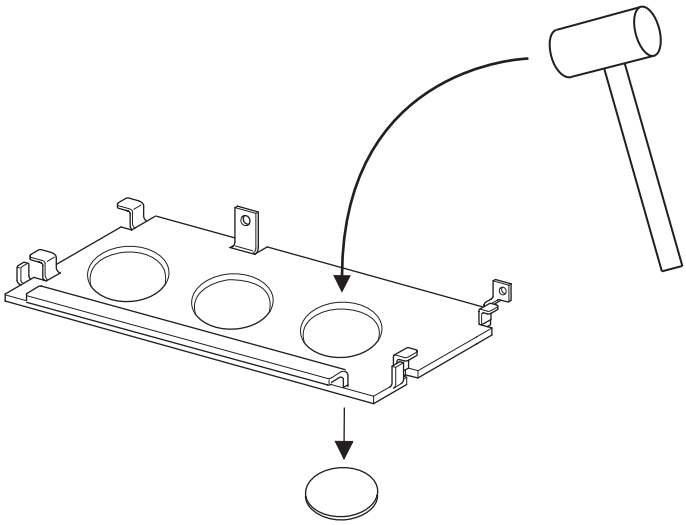

CAUTION

When handling the wiring cover, care must be taken not to cut fingers or hands with sharp edges and burrs.
To avoid wire offcuts and other foreign matter to enter the inverter, conduits must be installed to the all knockout holes.

⚠ WARNING

⚠ Do not wire without using conduits. Otherwise, the cable sheathes may be scratched by the wiring cover edges, resulting in a short circuit or ground fault.

REMARKS

- When using conduits for the FR-F720-00046 and 00077, fix the conduits to the wiring cover after connecting the earth cable to the inverter earth terminal.

2.2.3 Cables and wiring length

(1) Applicable cable size

Select the recommended cable size to ensure that a voltage drop will be 2% or less.
If the wiring distance is long between the inverter and motor, a main circuit cable voltage drop will cause the motor torque to decrease especially at the output of a low frequency.
The following table indicates a selection example for the wiring length of 20m (65.62feet).

200V class (when input power supply is 220V)

Applicable Inverter Model	Terminal Screw Size *4	Tightening Torque N·m	Crimping Terminal		Cable Sizes								
					HIV, etc. (mm^2) *1				AWG/MCM *2		PVC, etc. (mm^2) *3		
			R/L1, S/L2, T/L3	U, V, W	R/L1, S/L2, T/L3	U, V, W	P/+, P1	Earth (ground) cable	R/L1, S/L2, T/L3	U, V, W	R/L1, S/L2, T/L3	U, V, W	Earth (ground) cable
FR-F720-00046 to 00105-NA	M4	1.5	2-4	2-4	2	2	2	2	14	14	2.5	2.5	2.5
FR-F720-00167-NA	M4	1.5	5.5-4	5.5-4	3.5	3.5	3.5	3.5	12	12	4	4	4
FR-F720-00250-NA	M4	1.5	5.5-4	5.5-4	5.5	5.5	5.5	5.5	10	10	6	6	6
FR-F720-00340-NA	M5	2.5	14-5	8-5	14	8	14	5.5	6	8	16	10	16
FR-F720-00490-NA	M5	2.5	14-5	14-5	14	14	14	14	6	6	16	16	16
FR-F720-00630-NA	M5	2.5	22-5	22-5	22	22	22	14	4	6 (*5)	25	25	16
FR-F720-00770-NA	M6	4.4	38-6	38-6	38	38	38	22	2	2	50	50	25
FR-F720-00930-NA	M8(M6)	7.8	38-8	38-8	38	38	38	22	2	2	50	50	25
FR-F720-01250-NA	M8(M6)	7.8	60-8	60-8	60	60	60	22	1/0	1/0	50	50	25
FR-F720-01540-NA	M8(M6)	7.8	80-8	80-8	80	80	80	22	3/0	3/0	70	70	35
FR-F720-01870-NA	M10(M8)	14.7	100-10	100-10	100	100	100	38	4/0	4/0	95	95	50
FR-F720-02330-NA	M10(M8)	14.7	100-10	100-10	100	100	100	38	4/0	4/0	95	95	50
FR-F720-03160-NA	M12(M10)	24.5	150-12	150-12	125	125	150	38	250	250	—	—	—
FR-F720-03800-NA	M12(M10)	24.5	150-12	150-12	150	150	2×100	38	2×4/0	2×4/0	—	—	—
FR-F720-04750-NA	M12(M10)	24.5	100-12	100-12	2×100	2×100	2×100	38	2×4/0	2×4/0	—	—	—

*1 The recommended cable size is that of the cable (e.g. HIV cable (600V class 2 vinyl-insulated cable)) with continuous maximum permissible temperature of 75°C (167°F). Assumes that the surrounding air temperature is 50°C (122°F) or less and the wiring distance is 20m (65.62feet) or less.

*2 The recommended cable size is that of the cable (THHW cable) with continuous maximum permissible temperature of 75°C (167°F). Assumes that the surrounding air temperature is 40°C (104°F) or less and the wiring distance is 20m (65.62feet) or less.
(Selection example for use mainly in the United States.)

*3 For the FR-F720-00930 or less, the recommended cable size is that of the cable (PVC cable) with continuous maximum permissible temperature of 70°C (158°F). Assumes that the surrounding air temperature is 40°C (104°F) or less and the wiring distance is 20m(65.62feet) or less.
For the FR-F720-01250 or more, the recommended cable size is that of the cable (XLPE cable) with continuous maximum permissible temperature of 90°C (194°F). Assumes that the surrounding air temperature is 40°C (104°F) or less and wiring is performed in an enclosure.
(Selection example for use mainly in Europe.)

*4 The terminal screw size indicates the terminal size for R/L1, S/L2, T/L3, U, V, W, PR, PX, P/+, N/-, P1 and a screw for grounding.
A screw for earthing (grounding) of the FR-F720-00930 or more is indicated in ( ).

*5 When connecting the option unit to P/+, P1, N/-, use THHN cables for the option and terminals R/L1, S/L2, T/L3, U, V, W.

400V class (when input power supply is 440V based on the rated current for 110% overload for 1 minute)

Applicable Inverter Model	Terminal Screw Size *4	Tightening Torque N·m	Crimping (Compression) Terminal		Cable Sizes								
					HIV, etc. (mm2) *1				AWG/MCM *2		PVC, etc. (mm2) *3		
			R/L1, S/L2, T/L3	U, V, W	R/L1, S/L2, T/L3	U, V, W	P/+, P1	Earth (ground) cable	R/L1, S/L2, T/L3	U, V, W	R/L1, S/L2, T/L3	U, V, W	Earth (ground) cable
FR-F740-00023 to 00083-NA	M4	1.5	2-4	2-4	2	2	2	2	14	14	2.5	2.5	2.5
FR-F740-00126-NA	M4	1.5	2-4	2-4	2	2	3.5	3.5	12	14	2.5	2.5	4
FR-F740-00170-NA	M4	1.5	5.5-4	5.5-4	3.5	3.5	3.5	3.5	12	12	4	4	4
FR-F740-00250-NA	M4	1.5	5.5-4	5.5-4	5.5	5.5	5.5	8	10	10	6	6	10
FR-F740-00310-NA	M5	2.5	8-5	8-5	8	8	8	8	8	8	10	10	10
FR-F740-00380-NA	M5	2.5	14-5	8-5	14	8	14	14	6	8	16	10	16
FR-F740-00470-NA	M6	4.4	14-6	14-6	14	14	22	14	6	6	16	16	16
FR-F740-00620-NA	M6	4.4	22-6	22-6	22	22	22	14	4	4	25	25	16
FR-F740-00770-NA	M6	4.4	22-6	22-6	22	22	22	14	4	4	25	25	16
FR-F740-00930-NA	M8	7.8	38-8	38-8	38	38	38	22	1	2	50	50	25
FR-F740-01160-NA	M8	7.8	60-8	60-8	60	60	60	22	1/0	1/0	50	50	25
FR-F740-01800-NA	M8	7.8	60-8	60-8	60	60	60	38	1/0	1/0	50	50	25
FR-F740-02160-NA	M10	14.7	100-10	100-10	80	80	80	38	3/0	3/0	70	70	35
FR-F740-02600-NA	M10	14.7	100-10	100-10	100	100	100	38	4/0	4/0	95	95	50
FR-F740-03250-NA	M10	14.7	150-10	150-10	125	125	100	38	250	250	120	120	70
FR-F740-03610-NA	M10	14.7	150-10	150-10	150	150	150	38	300	300	150	150	95
FR-F740-04320-NA	M12(M10)	24.5	100-12	100-12	2×100	2×100	2×100	38	2×4/0	2×4/0	2×95	2×95	95
FR-F740-04810-NA	M12(M10)	24.5	100-12	100-12	2×100	2×100	2×100	38	2×4/0	2×4/0	2×95	2×95	95
FR-F740-05470-NA	M12(M10)	46	150-12	150-12	2×125	2×125	2×125	38	2×250	2×250	2×120	2×120	120
FR-F740-06100-NA	M12(M10)	46	150-12	150-12	2×150	2×150	2×125	60	2×300	2×300	2×150	2×150	150
FR-F740-06830-NA	M12(M10)	46	200-12	200-12	2×200	2×200	2×150	60	2×350	2×350	2×185	2×185	2×95
FR-F740-07700-NA	M12(M10)	46	C2-200	C2-200	2×200	2×200	2×200	60	2×400	2×400	2×185	2×185	2×95
FR-F740-08660-NA	M12(M10)	46	C2-250	C2-250	2×250	2×250	2×200	60	2×500	2×500	2×240	2×240	2×120
FR-F740-09620-NA	M12(M10)	46	C2-250	C2-250	2×250	2×250	2×250	100	2×500	2×500	2×240	2×240	2×120
FR-F740-10940-NA	M12(M10)	46	C2-200	C2-200	3×200	3×200	3×200	100	3×350	3×350	3×185	3×185	2×150
FR-F740-12120-NA	M12(M10)	46	C2-200	C2-200	3×200	3×200	3×200	100	3×400	3×400	3×185	3×185	2×150

*1 For the FR-F740-01160 or less, the recommended cable size is that of the cable (e.g. HIV cable (600V class 2 vinyl-insulated cable)) with continuous maximum permissible temperature of 75°C (167°F). Assumes that the surrounding air temperature is 50°C (122°F) or less and the wiring distance is 20m (65.62feet) or less.
For the FR-F740-01800 or more, the recommended cable size is that of the cable (e.g. LMFC (heat resistant flexible cross-linked polyethylene insulated cable)) with continuous maximum permissible temperature of 90°C (194°F). Assumes that the surrounding air temperature is 50°C (122°F) or less and wiring is performed in an enclosure.

*2 For the FR-F740-00930 or less, the recommended cable size is that of the cable (THHW cable) with continuous maximum permissible temperature of 75°C (167°F). Assumes that the surrounding air temperature is 40°C (104°F) or less and the wiring distance is 20m (65.62feet) or less.
For the FR-F740-01160 or more, the recommended cable size is that of the cable (THHN cable) with continuous maximum permissible temperature of 90°C (194°F). Assumes that the surrounding air temperature is 40°C (104°F) or less and wiring is performed in an enclosure.
(Selection example for use mainly in the United States.)

*3 For the FR-F740-00930 or less, the recommended cable size is that of the cable (PVC cable) with continuous maximum permissible temperature of 70°C (158°F). Assumes that the surrounding air temperature is 40°C (104°F) or less and the wiring distance is 20m (65.62feet) or less.
For the FR-F740-01160 or more, the recommended cable size is that of the cable (XLPE cable) with continuous maximum permissible temperature of 90°C (194°F). Assumes that the surrounding air temperature is 40°C (104°F) or less and wiring is performed in an enclosure.
(Selection example for use mainly in the Europe.)

*4 The terminal screw size indicates the terminal size for R/L1, S/L2, T/L3, U, V, W, P/+, N/-, P1, and a screw for earthing (grounding).
A screw for earthing (grounding) of the FR-F740-04320 or more is indicated in ( ).

The line voltage drop can be calculated by the following formula:

$$\text{Line voltage drop [V]} = \frac{\sqrt{3} \times \text{wire resistance[m}\Omega\text{/m]} \times \text{wiring distance[m]} \times \text{current[A]}}{1000}$$

Use a larger diameter cable when the wiring distance is long or when it is desired to decrease the voltage drop (torque reduction) in the low speed range.

CAUTION

- Tighten the terminal screw to the specified torque.
  A screw that has been tighten too loosely can cause a short circuit or malfunction.
  A screw that has been tighten too tightly can cause a short circuit or malfunction due to the unit breakage.
- Use crimping terminals with insulation sleeve to wire the power supply and motor.

(2) Notes on grounding

- Always ground the motor and inverter.

1)Purpose of grounding

Generally, an electrical apparatus has an ground terminal, which must be connected to the ground before use. An electrical circuit is usually insulated by an insulating material and encased. However, it is impossible to manufacture an insulating material that can shut off a leakage current completely, and actually, a slight current flow into the case. The purpose of grounding the case of an electrical apparatus is to prevent operator from getting an electric shock from this leakage current when touching it.

To avoid the influence of external noises, this grounding is important to audio equipment, sensors, computers and other apparatuses that handle low-level signals or operate very fast.

2)Grounding methods and grounding work

As described previously, grounding is roughly classified into an electrical shock prevention type and a noise-affected malfunction prevention type. Therefore, these two types should be discriminated clearly, and the following work must be done to prevent the leakage current having the inverter's high frequency components from entering the malfunction prevention type grounding:

(a) If possible, use (I) independent grounding in figure below for the inverter. If independent grounding is not available, use (II) joint grounding in the figure below which the inverter is connected with the other equipment at a grounding point.
The (III) common grounding as in the figure below, which inverter shares a common ground cable with the other equipment, must be avoided.
A leakage current including many high frequency components flows in the ground cables of the inverter and inverter-driven motor. Therefore, use the independent grounding and separated the grounding cable of the inverter from equipments sensitive to EMI.
In a high building, it may be effective to use the EMI prevention type grounding connecting to an iron structure frame, and electric shock prevention type grounding with the independent grounding together.

(b) This inverter must be grounded. Grounding must conform to the requirements of national and local safety regulations and electrical code (NEC section 250, IEC 536 class 1 and other applicable standards).
A neutral-point grounded power supply for 400V class inverter in compliance with EN standard must be used.

(c) Use the thickest possible ground cable. The ground cable should be of not less than the size indicated in the above table on the previous page.

(d) The grounding point should be as near as possible to the inverter, and the grounding wire length should be as short as possible.

(e) Run the ground cable as far away as possible from the I/O wiring of equipment sensitive to noises and run them in parallel in the minimum distance.

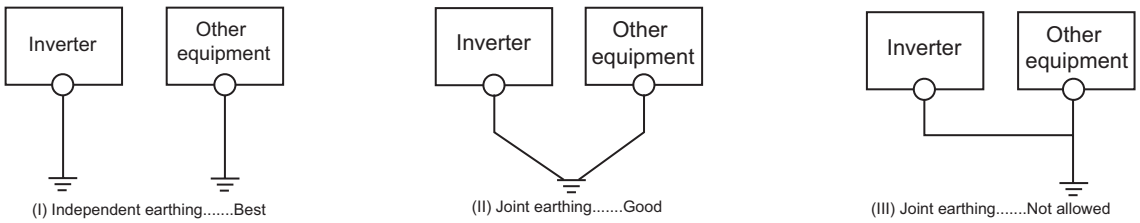

To be compliant with the EU Directive (Low Voltage Directive), refer to *the Installation Guideline*.

(3) Total wiring length

The overall wiring length for connection of a single motor or multiple motors should be within the value in the table below.

Pr. 72 PWM frequency selection Setting (carrier frequency)	FR-F720-00046 FR-F740-00023	FR-F720-00077 FR-F740-00038	FR-F720-00105 or more FR-F740-00052 or More
2 (2kHz) or less	300m (984.25 feet)	500m (1640.42 feet)	500m (1640.42 feet)
3 to 15 (3kHz to 14.5kHz) *	200m (656.19 feet)	300m (984.25 feet)	500m (1640.42 feet)

* For the FR-F720-03160 (FR-F740-01800) or more, the setting range of *Pr. 72 PWM frequency selection* is "0 to 6".

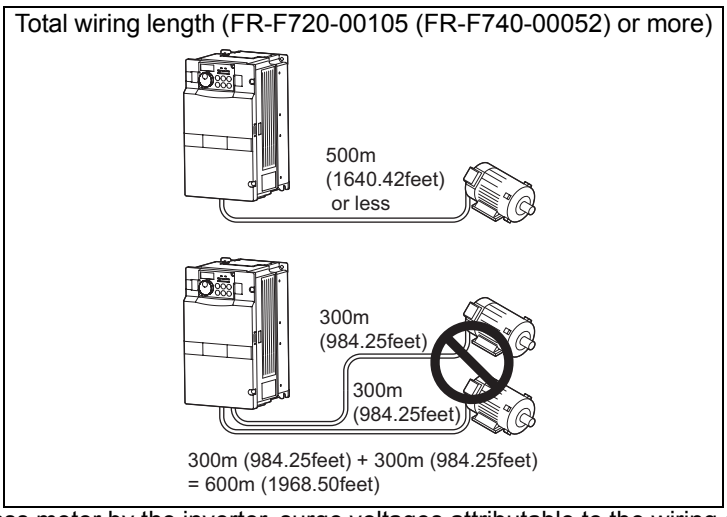

When driving a 400V class motor by the inverter, surge voltages attributable to the wiring constants may occur at the motor terminals, deteriorating the insulation of the motor.
Take the following measures 1) or 2) in this case. *(Refer to page 52)*

1) Use a "400V class inverter-driven insulation-enhanced motor" and set frequency in *Pr. 72 PWM frequency selection* according to wiring length

	Wiring Length		
	50m (164.04feet) or less	50m (164.04feet) to 100m (328.08feet)	exceeding 100m (328.08feet)
Pr. 72 PWM frequency selection Setting (carrier frequency)	14.5kHz or less	9kHz or less	4kHz or less

2) Connect the surge voltage suppression filter (FR-ASF-H) to the or less andthe sine wave filter (MT-BSL/BSC) to the or more on the inverter outputside.

CAUTION

- Especially for long-distance wiring, the inverter may be affected by a charging current caused by the stray capacitances of the wiring, leading to a malfunction of the overcurrent protective function or fast response current limit function or a malfunction or fault of the equipment connected on the inverter output side. If fast-response current limit function malfunctions, disable this function. (For *Pr.156 Stall prevention operation selection, refer to page 81.*)
- For details of *Pr. 72 PWM frequency selection , refer to page 169*. (When using an optional sine wave filter (MT-BSL/BSC) for the FR-F720-03160 (FR-F740-01800) or more, set "25" in *Pr.72* (2.5kHz)).
- For explanation of surge voltage suppression filter (FR-ASF-H) and sine wave filter (MT-BSL/BSC), refer to the manual of each option.

(4) Cable size of the control circuit power supply (terminal R1/L11, S1/L21)

· Terminal Screw Size: M4
· Cable size: 0.75mm^2 to 2mm^2
· Tightening torque: 1.5N·m

2.2.4 When connecting the control circuit and the main circuit separately to the power supply

<Connection diagram>

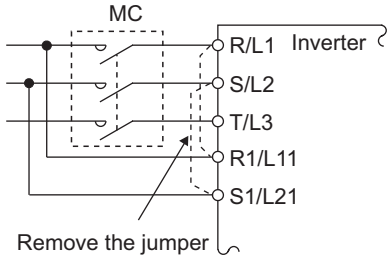

When fault occurs, opening of the electromagnetic contactor (MC) on the inverter power supply side results in power loss in the control circuit, disabling the fault output signal retention. Terminals R1/L11 and S1/L21 are provided for when retention of a fault signal is required. In this case, connect the power supply terminals R1/L11 and S1/L21 of the control circuit to the primary side of the MC.
Do not connect the power cable to incorrect terminals. Doing so may damage the inverter.

- **FR-F720-00046 to 00250, FR-F740-00023 to 00126**

1) Loosen the upper screws.
2) Remove the lower screws.
3) Remove the jumper
4) Connect the separate power supply cable for the control circuit to the lower terminals (R1/L11, S1/L21).

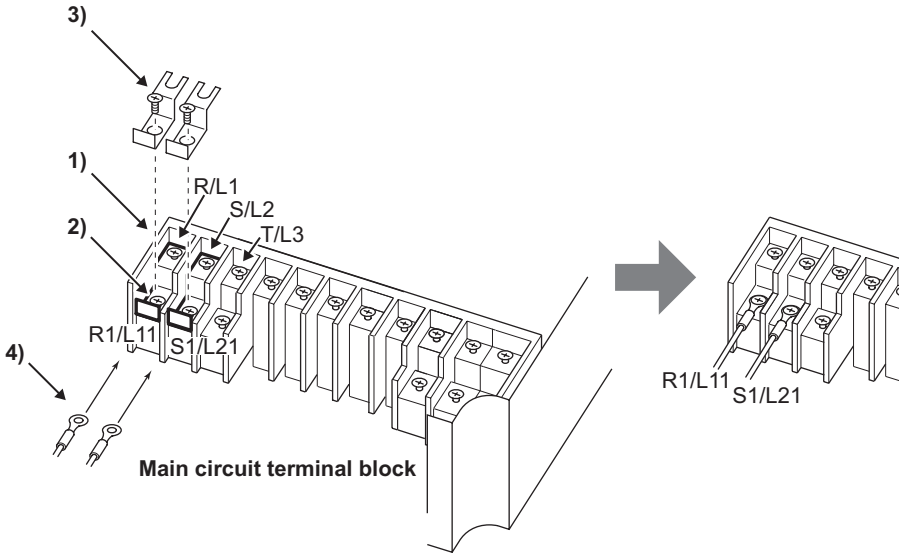

- **FR-F720-00340, 00490, FR-F740-00170, 00250**

1) Remove the upper screws.
2) Remove the lower screws.
3) Remove the jumper.
4) Connect the separate power supply cable for the control circuit to the upper terminals (R1/L11, S1/L21).

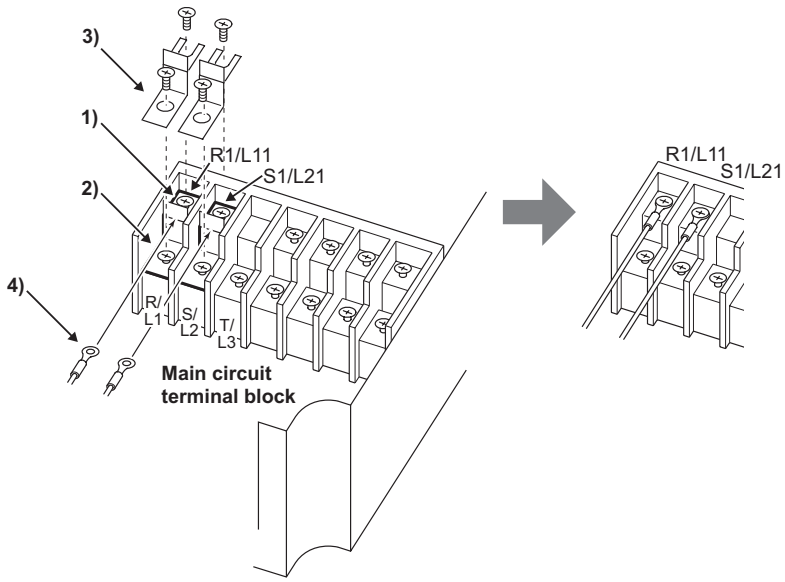

- **FR-F720-00630 (FR-F740-00310) or more**

1) Remove the upper screws.
2) Remove the lower screws.
3) Pull the jumper toward you to remove.
4) Connect the separate power supply cable for the control circuit to the upper terminals (R1/L11, S1/L21).

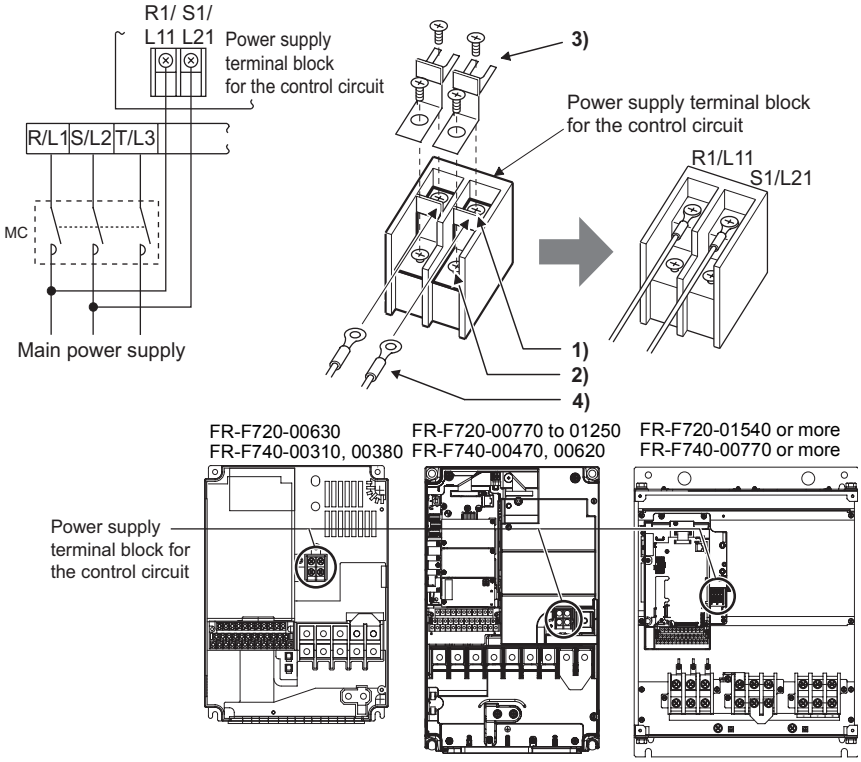

CAUTION

- Be sure to use the inverter with the jumpers across terminals R/L1 and R1/L11, S/L2 and S1/L21 removed when supplying power from other sources. The inverter may be damaged if you do not remove the jumper.
- The voltage should be the same as that of the main control circuit when the control circuit power is supplied from other than the primary side of the MC.
- The power capacity necessary when separate power is supplied from R1/L11 and S1/L21 differs according to the inverter capacity.

200V class	FR-F720-00630 or less 60VA	FR-F720-00770 80VA	FR-F720-00930 or more 80VA
400V class	FR-F740-00310 or less 60VA	FR-F740-00380 60VA	FR-F740-00470 or more 80VA

- If the main circuit power is switched OFF (for 0.1s or more) then ON again, the inverter resets and a fault output will not be held.

2.3 Control circuit specifications

2.3.1 Control circuit terminals

indicates that terminal functions can be selected using *Pr. 178 to Pr. 196 (I/O terminal function selection) (Refer to page 122.)*

(1) Input signals

Type	Terminal Symbol	Terminal Name	Description		Rated Specifications	Refer to
Contact input	STF	Forward rotation start	Turn ON the STF signal to start forward rotation and turn it OFF to stop.	When the STF and STR signals are turned ON simultaneously, the stop command is given.	Input resistance 4.7kΩ Voltage at opening: 21 to 27VDC Contacts at short-circuited: 4 to 6mADC	122
	STR	Reverse rotation start	Turn ON the STR signal to start reverse rotation and turn it OFF to stop.			
	STOP	Start self-holding selection	Turn ON the STOP signal to self-hold the start signal.			122
	RH, RM, RL	Multi-speed selection	Multi-speed can be selected according to the combination of RH, RM and RL signals.			122
	JOG	Jog mode selection	Turn ON the JOG signal to select Jog operation (initial setting) and turn ON the start signal (STF or STR) to start Jog operation.			122
	RT	Second function selection	Turn ON the RT signal to select second function. When the second function such as "second torque boost" and "second V/F (base frequency)" are set, turning ON the RT signal selects these functions.			122
	MRS	Output stop	Turn ON the MRS signal (20ms or more) to stop the inverter output. Use to shut off the inverter output when stopping the motor by electromagnetic brake.			122
	RES	Reset	Used to reset fault output provided when fault occurs. Turn ON the RES signal for more than 0.1s, then turn it OFF. Initial setting is for reset always. By setting *Pr.75*, reset can be set to enabled only at fault occurrence. Inverter recovers about 1s after the reset is released.			122
	AU	Terminal 4 input selection	Terminal 4 is valid only when the AU signal is turned ON. (The frequency setting signal can be set between 0 and 20mADC.) Turning the AU signal ON makes terminal 2 (voltage input) invalid.			171
		PTC input	AU terminal is used as PTC input terminal (thermal protection of the motor). When using it as PTC input terminal, set the AU/PTC switch to PTC.			110
	CS	Selection of automatic restart after instantaneous power failure	When the CS signal is left ON, the inverter restarts automatically at power restoration. Note that restart setting is necessary for this operation. In the initial setting, a restart is disabled. *(Refer to page 152 for Pr. 57 Restart coasting time)*			122
	SD	Contact input common (sink) (initial setting)	Common terminal for contact input terminal (sink logic)		——	—
		External transistor common (source)	When connecting the transistor output (open collector output), such as a programmable controller, when source logic is selected, connect the external power supply common for transistor output to this terminal to prevent a malfunction caused by undesirable currents.			
		24VDC power supply common	Common output terminal for 24VDC 0.1A power supply (PC terminal). Isolated from terminals 5 and SE.			
	PC	External transistor common (sink) (initial setting)	When connecting the transistor output (open collector output), such as a programmable controller, when sink logic is selected, connect the external power supply common for transistor output to this terminal to prevent a malfunction caused by undesirable currents.		Power supply voltage range 19.2 to 28.8VDC Permissible load current 100mA	31
		Contact input common (source)	Common terminal for contact input terminal (source logic).			
		24VDC power supply	Can be used as 24VDC 0.1A power supply.			

Type	Terminal Symbol	Terminal Name	Description	Rated Specifications	Refer to
Frequency setting	10E	Frequency setting power supply	When connecting the frequency setting potentiometer at an initial status, connect it to terminal 10. Change the input specifications of terminal 2 when connecting it to terminal 10E. *(Refer to page 175 for Pr. 73 Analog input selection.)*	10VDC±0.4V Permissible load current 10mA	171
	10			5.2VDC±0.2V Permissible load current 10mA	171
	2	Frequency setting (voltage)	Inputting 0 to 5VDC (or 0 to 10V, 0 to 20mA) provides the maximum output frequency at 5V (10V, 20mA) and makes input and output proportional. Use *Pr. 73* to switch from among input 0 to 5VDC (initial setting), 0 to 10VDC, and 0 to 20mA. Set the voltage/current input switch in the ON position to select current input (0 to 20mA).*1	Voltage input: Input resistance 10kΩ ± 1kΩ Maximum permissible voltage 20VDC Current input: Input resistance 245Ω ± 5Ω Maximum permissible current 30mA 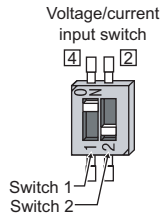	171
	4	Frequency setting (current)	Inputting 4 to 20mADC (or 0 to 5V, 0 to 10V) provides the maximum output frequency at 20mA (5V, 10V) makes input and output proportional. This input signal is valid only when the AU signal is ON (terminal 2 input is invalid). Use *Pr. 267* to switch from among input 4 to 20mA (initial setting), 0 to 5VDC, and 0 to 10VDC. Set the voltage/current input switch in the OFF position to select voltage input (0 to 5V/0 to 10V).*1		171
	1	Frequency setting auxiliary	Inputting 0 to ±5 VDC or 0 to ±10VDC adds this signal to terminal 2 or 4 frequency setting signal. Use *Pr.73* to switch between the input 0 to ±5VDC and 0 to ±10VDC (initial setting).	Input resistance 10kΩ ± 1kΩ Maximum permissible voltage ± 20VDC	171
	5	Frequency setting common	Common terminal for frequency setting signal (terminal 2, 1 or 4) and analog output terminal AM and CA. Do not ground.	———	171

*1 Set *Pr. 73*, *Pr. 267*, and a voltage/current input switch correctly, then input an analog signal in accordance with the setting.
Applying a voltage signal with voltage/current input switch ON (current input is selected) or a current signal with switch OFF (voltage input is selected) could cause component damage of the inverter or analog circuit of signal output devices. *(For details, refer to page 171.)*

(2) Output signals

Type	Terminal Symbol	Terminal Name	Description		Rated Specifications	Refer to
Relay	A1, B1, C1	Relay output 1 (Fault output)	1 changeover contact output indicates that the inverter's protective function has activated and the output stopped. Fault: No conduction across B and C (Across A and C Continuity), Normal: Across B and C Continuity (No conduction across A and C)		Contact capacity: 230VAC 0.3A (Power factor=0.4) 30VDC 0.3A	128
	A2, B2, C2	Relay output 2	1 changeover contact output			128
Open collector	RUN	Inverter running	Switched low when the inverter output frequency is equal to or higher than the starting frequency (initial value 0.5Hz). Switched high during stop or DC injection brake operation.		Permissible load 24VDC (27VDC maximum) 0.1A (A voltage drop is 3.4V maximum when the signal is ON.) Low is when the open collector output transistor is ON (conducts). High is when the transistor is OFF (does not conduct).	128
	SU	Up to frequency	Switched low when the output frequency reaches within the range of ±10% (initial value) of the set frequency. Switched high during acceleration/ deceleration and at a stop.	Alarm code (4bit) output		128
	OL	Overload warning	Switched low when stall prevention is activated by the stall prevention function. Switched high when stall prevention is cancelled.			128
	IPF	Instantaneous power failure	Switched low when an instantaneous power failure and under voltage protections are activated.			128
	FU	Frequency detection	Switched low when the inverter output frequency is equal to or higher than the preset detected frequency and high when less than the preset detected frequency.			128
	SE	Open collector output common	Common terminal for terminals RUN, SU, OL, IPF, FU		———	—
Analog	CA	Analog current output	Select one e.g. output frequency from monitor items. (Not output during inverter reset.) The output signal is proportional to the magnitude of the corresponding monitoring item. To set a full-scale value for monitoring the output frequency and the output current, set *Pr. 56 and Pr. 158*. *(Refer to page 147)*	Output item: Output frequency (initial setting)	Load impedance 200Ω to 450Ω Output signal 0 to 20mADC	147
	AM	Analog voltage output			Output signal 0 to 10VDC Permissible load current 1mA (load impedance 10kΩ or more) Resolution 8 bit	147

(3) Communication

Type	Terminal Symbol		Terminal Name	Description	Refer to
RS-485	—		PU connector	With the PU connector, communication is available through RS-485. (for connection on a 1:1 basis only) Conforming standard : EIA-485 (RS-485) Transmission format : Multidrop link Communication speed : 4800 to 38400bps Overall length : 500m (1640.42feet)	209
	RS-485 terminals	TXD+	Inverter transmission terminal	With the RS-485 terminals, communication is available through RS-485. Conforming standard : EIA-485 (RS-485) Transmission format : Multidrop link Communication speed : 300 to 38400bps Overall length : 500m (1640.42feet)	211
		TXD-			
		RXD+	Inverter reception terminal		
		RXD-			
		SG	Earth (Ground)		

2.3.2 Changing the control logic

The input signals are set to sink logic (SINK) when shipped from the factory.
To change the control logic, the jumper connector on the back of the control circuit terminal block must be moved to the other position.
(The output signals may be used in either the sink or source logic independently of the jumper connector position.)

1) Loosen the two installation screws in both ends of the control circuit terminal block. (These screws cannot be removed.)
   Pull down the terminal block from behind the control circuit terminals.

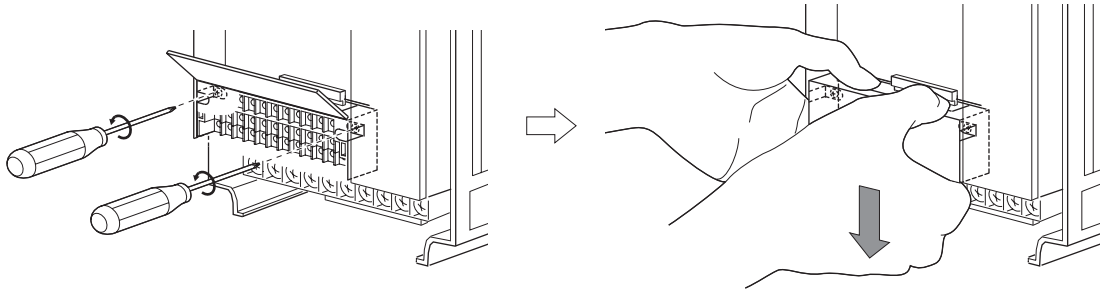

2) Change the jumper connector set to the sink logic (SINK) on the rear panel of the control circuit terminal block to source logic (SOURCE).

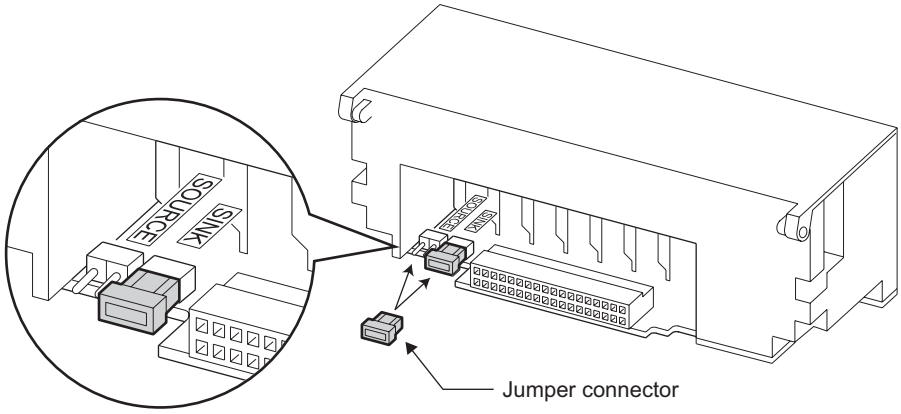

3) Using care not to bend the pins of the inverter's control circuit connector, reinstall the control circuit terminal block and fix it with the mounting screws.

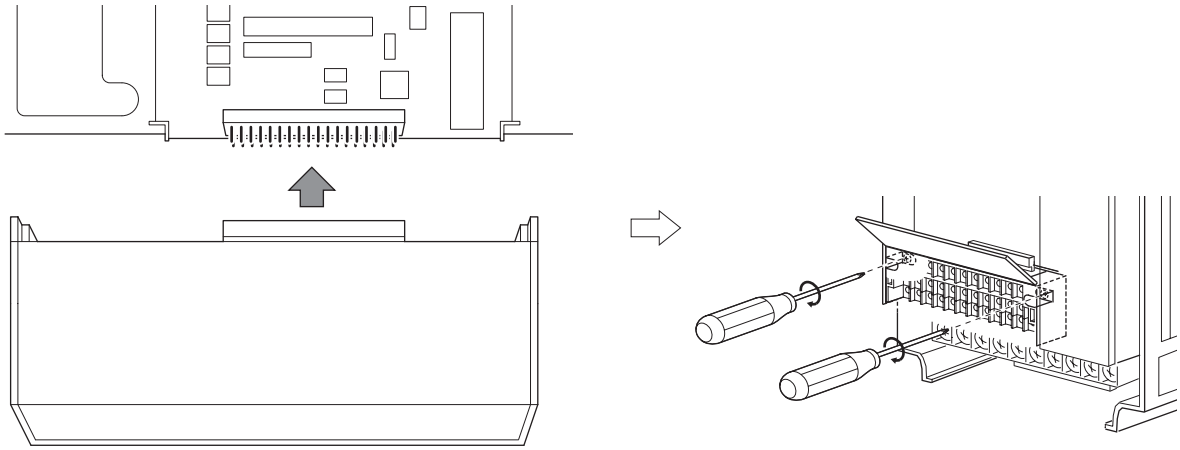

CAUTION

1. Make sure that the control circuit connector is fitted correctly.
2. While power is ON, never disconnect the control circuit terminal block.

4) Sink logic and source logic

- In sink logic, a signal switches ON when a current flows from the corresponding signal input terminal. Terminal SD is common to the contact input signals. Terminal SE is common to the open collector output signals.
- In source logic, a signal switches ON when a current flows into the corresponding signal input terminal. Terminal PC is common to the contact input signals. Terminal SE is common to the open collector output signals.

●Current flow concerning the input/output signal when sink logic is selected

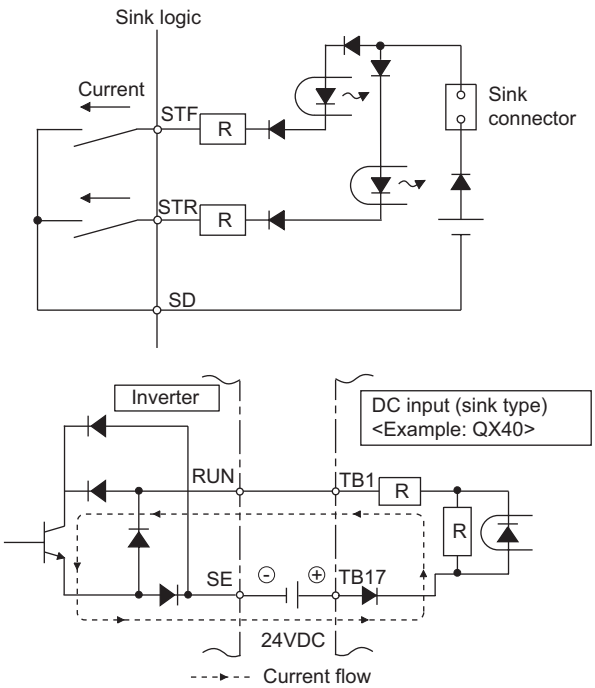

●Current flow concerning the input/output signal when source logic is selected

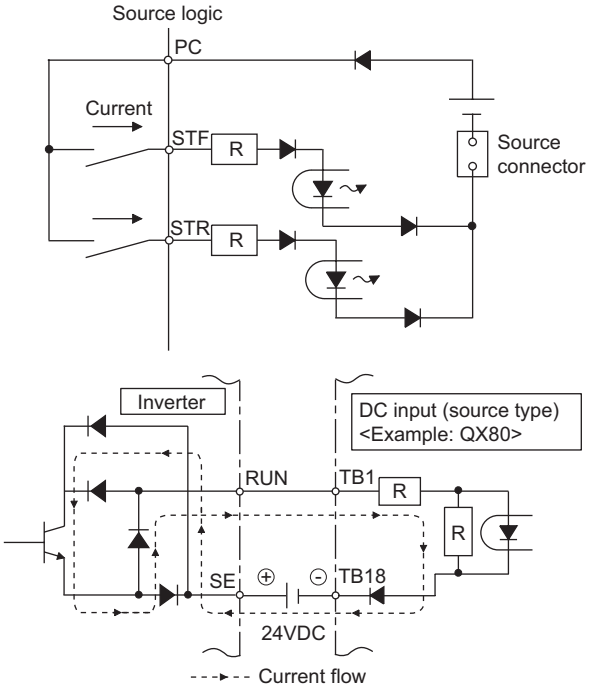

- When using an external power supply for transistor output

· Sink logic type Use terminal PC as a common terminal, and perform wiring as shown below. (Do not connect terminal SD of the inverter with terminal 0V of the external power supply. When using terminals PC and SD as a 24VDC power supply, do not install a power supply in parallel in the outside of the inverter. Doing so may cause a malfunction due to undesirable current.) 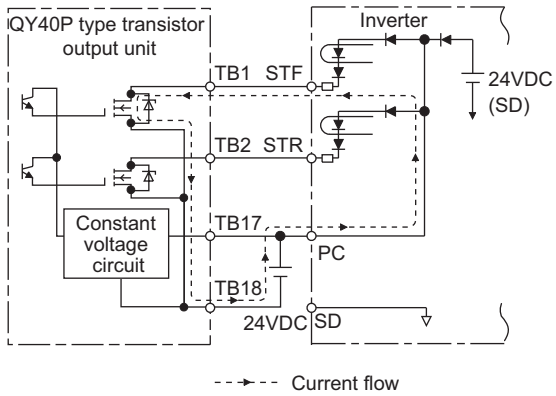 	· Source logic type Use terminal SD as a common terminal, and perform wiring as shown below. (Do not connect terminal PC of the inverter with terminal +24V of the external power supply. When using terminals PC and SD as a 24VDC power supply, do not install an external power supply in parallel with the inverter. Doing so may cause a malfunction in the inverter due to undesirable currents.) 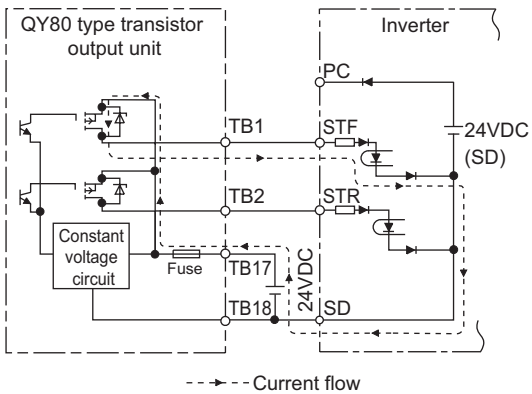

2.3.3 Control circuit terminal layout

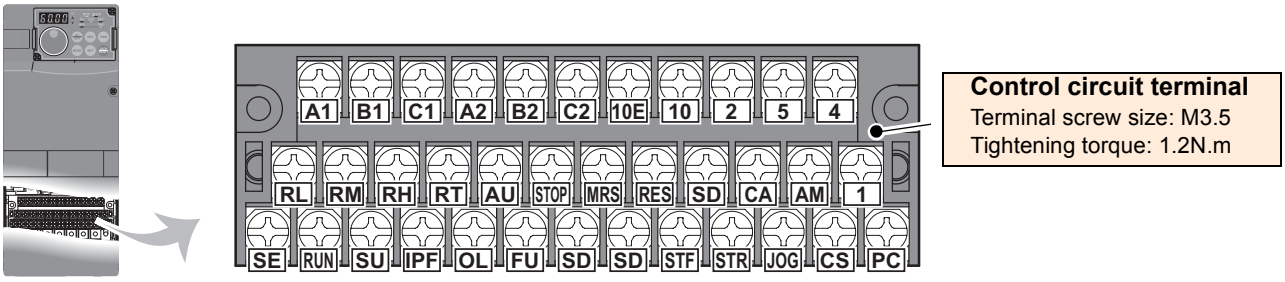

(1) Common terminals of the control circuit (SD, 5, SE)

Terminals SD, 5, and SE are all common terminals (0V) for I/O signals and are isolated from each other. Do not earth(ground) these terminals.
Avoid connecting the terminal SD and 5 and the terminal SE and 5.
Terminal SD is a common terminal for the contact input terminals (STF, STR, STOP, RH, RM, RL, JOG, RT, MRS, RES, AU, CS).
The open collector circuit is isolated from the internal control circuit by photocoupler.
Terminal 5 is a common terminal for frequency setting signal (terminal 2, 1 or 4), analog current output terminal (CA) and analog output terminal AM.
It should be protected from external noise using a shielded or twisted cable.
Terminal SE is a common terminal for the open collector output terminal (RUN, SU, OL, IPF, FU).
The contact input circuit is isolated from the internal control circuit by photocoupler.

(2) Signal inputs by contactless switches

The contacted input terminals of the inverter (STF, STR, STOP, RH, RM, RL, JOG, RT, MRS, RES, AU, CS) can be controlled using a transistor instead of a contacted switch as shown on the right.

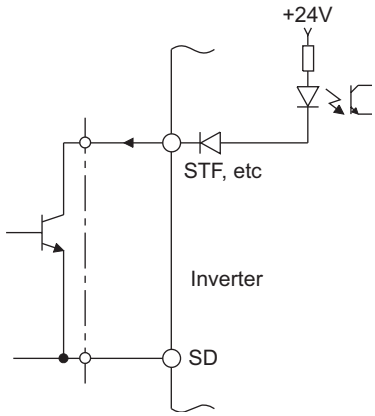

External signal input using transistor

2.3.4 Wiring instructions

1) It is recommended to use the cables of 0.75mm^2 gauge for connection to the control circuit terminals.
   If the cable gauge used is 1.25mm^2 or more, the front cover may be lifted when there are many cables running or the cables are run improperly, resulting in an operation panel contact fault.
2) The maximum wiring length should be 30m (98.43feet).
3) Use two or more parallel micro-signal contacts or twin contacts to prevent a contact faults when using contact inputs since the control circuit input signals are micro-currents.

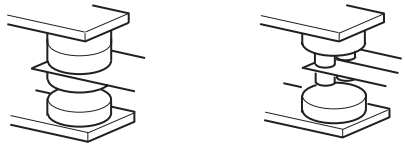

Micro signal contacts Twin contacts

4) Use shielded or twisted cables for connection to the control circuit terminals and run them away from the main and power circuits (including the 200V relay sequence circuit).
5) Do not apply a voltage to the contact input terminals (e.g. STF) of the control circuit.
6) Always apply a voltage to the fault output terminals (A, B, C) via a relay coil, lamp, etc.

- **Wiring of the control circuit of the FR-F720-03160 (FR-F740-01800) or more**

For wiring of the control circuit of the FR-F720-03160 (FR-F740-01800) or more, separate away from wiring of the main circuit.
Make cuts in rubber bush of the inverter side and lead wires.

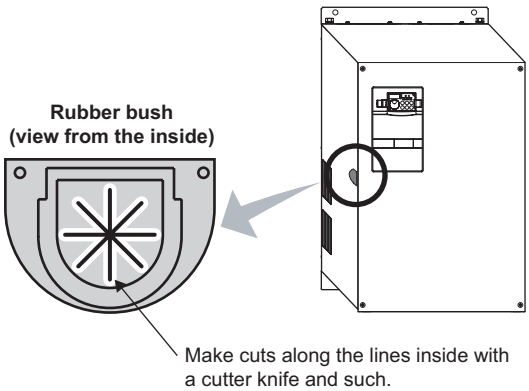

<Wiring>

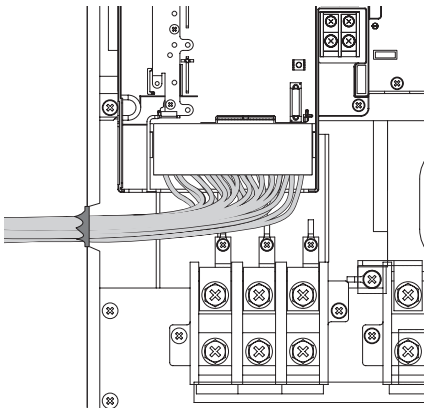

2.3.5 Mounting the operation panel (FR-DU07) on the enclosure surface

Having an operation panel on the enclosure surface is convenient. With a connection cable, you can mount the operation panel (FR-DU07) to the enclosure surface, and connect it to the inverter.
Use the option FR-CB2□□, or the following connector and cable available on the market.
Securely insert one end of connection cable into the PU connector of the inverter and the other end into the connection connector of the operation panel (FR-DU07) along the guides until the stoppers are fixed.

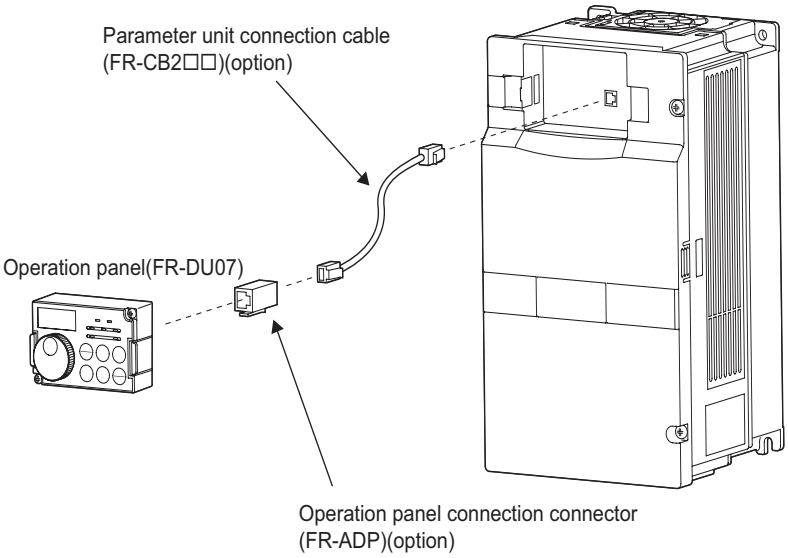

REMARKS

- Overall wiring length when the operation panel is connected: 20m(65.6 feet)
- Refer to the following when fabricating the cable on the user side.
  Commercially available product examples
  (as of Oct. 2008)

	Product	Type	Maker
1)	Communication cable	SGLPEV-T (Cat5e/300m) 24AWG × 4P*	Mitsubishi Cable Industries, Ltd.
2)	RJ-45 connector	5-554720-3	Tyco Electronics Corporation

* Do not use pins No. 2, 8 of the communication cable.

☞*Refer to page 214* for RS-485 communication.

2.3.6 RS-485 terminal block

- Conforming standard: EIA-485(RS-485)
- Transmission format: Multidrop link
- Communication speed: MAX 38400bps (76800bps for BACnet MS/TP protocol)
- Overall length: 500m
- Connection cable:Twisted pair cable (4 pairs)

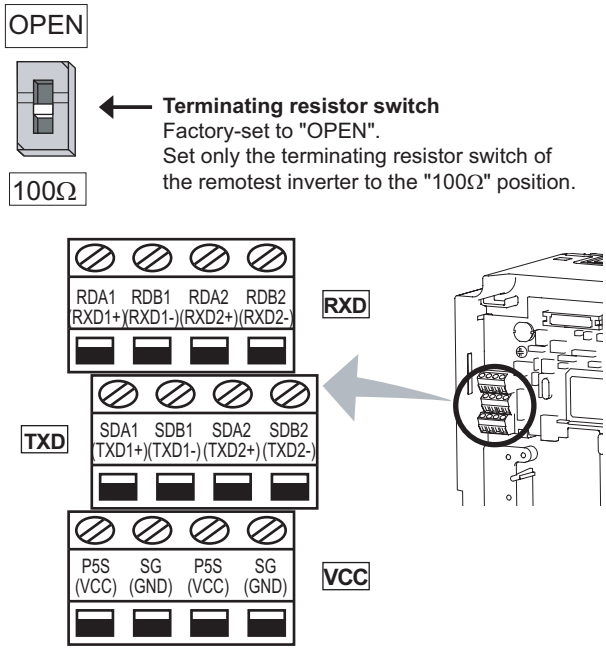

2.3.7 Communication operation

Using the PU connector or RS-485 terminal, you can perform communication operation from a personal computer etc. When the PU connector is connected with a personal, FA or other computer by a communication cable, a user program can run and monitor the inverter or read and write to parameters.
For the Mitsubishi inverter protocol (computer link operation), communication can be performed with the PU connector and RS-485 terminal.
For the Modbus-RTU protocol and BACnet MS/TP protocol, communication can be performed with the RS-485 terminal.
For further details, refer to *page 209*.

2.4 Connection of stand-alone option units

The inverter accepts a variety of stand-alone option units as required.
Incorrect connection will cause inverter damage or accident. Connect and operate the option unit carefully in accordance with the corresponding option unit manual.

2.4.1 Connection of the brake unit (FR-BU2)

Connect the brake unit (FR-BU2) as shown below to improve the braking capability at deceleration.

(1) Connection example with the GRZG type discharging resistor

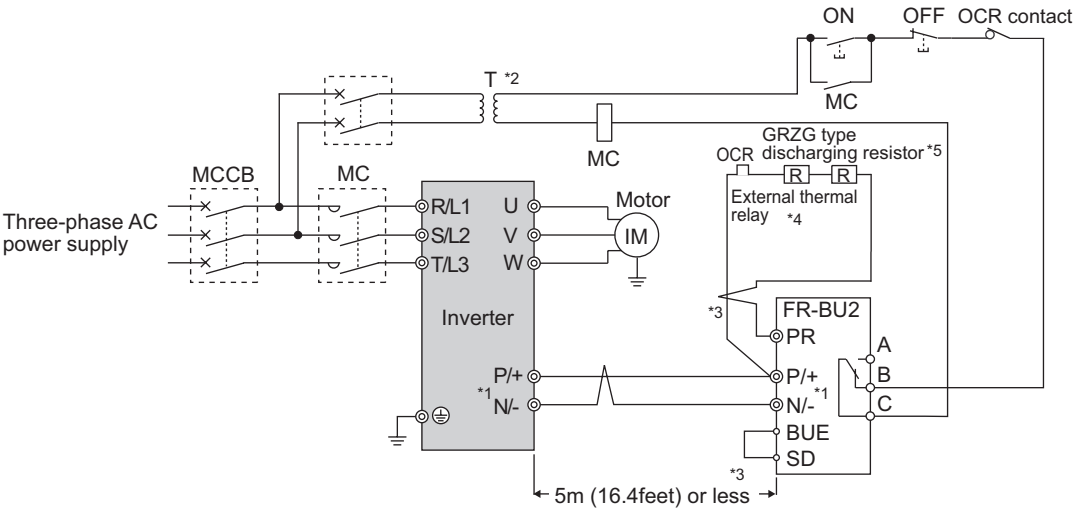

*1 Connect the inverter terminals (P/+, N/-) and brake unit (FR-BU2) terminals so that their terminal names match with each other. (Incorrect connection will damage the inverter and brake unit.)
*2 When the power supply is 400V class, install a step-down transformer.
*3 Keep a wiring distance of within 5m (16.4feet) between the inverter, brake unit (FR-BU2) and discharging resistor. Even when the wiring is twisted, the cable length must not exceed 10m (32.8feet).
*4 It is recommended to install an external thermal relay to prevent overheat of discharging resistors.
*5 Refer to FR-BU2 manual for connection method of discharging resistor.

<Recommended external thermal relay>

Brake Unit	Discharging Resistor	Recommended External Thermal Relay
FR-BU2-1.5K	GZG 300W-50Ω (one)	TH-N20CXHZ 1.3A
FR-BU2-3.7K	GRZG 200-10Ω (three in series)	TH-N20CXHZ 3.6A
FR-BU2-7.5K	GRZG 300-5Ω (four in series)	TH-N20CXHZ 6.6A
FR-BU2-15K	GRZG 400-2Ω (six in series)	TH-N20CXHZ 11A
FR-BU2-H7.5K	GRZG 200-10Ω (six in series)	TH-N20CXHZ 3.6A
FR-BU2-H15K	GRZG 300-5Ω (eight in series)	TH-N20CXHZ 6.6A
FR-BU2-H30K	GRZG 400-2Ω (twelve in series)	TH-N20CXHZ 11A

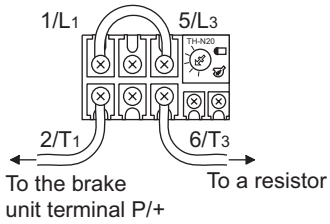

CAUTION

- Set "1" in *Pr. 0 Brake mode selection* of the FR-BU2 to use GRZG type discharging resistor.
- Do not remove a jumper across terminal P/+ and P1 except when connecting a DC reactor.

(2) FR-BR-(H) connection example with resistor unit

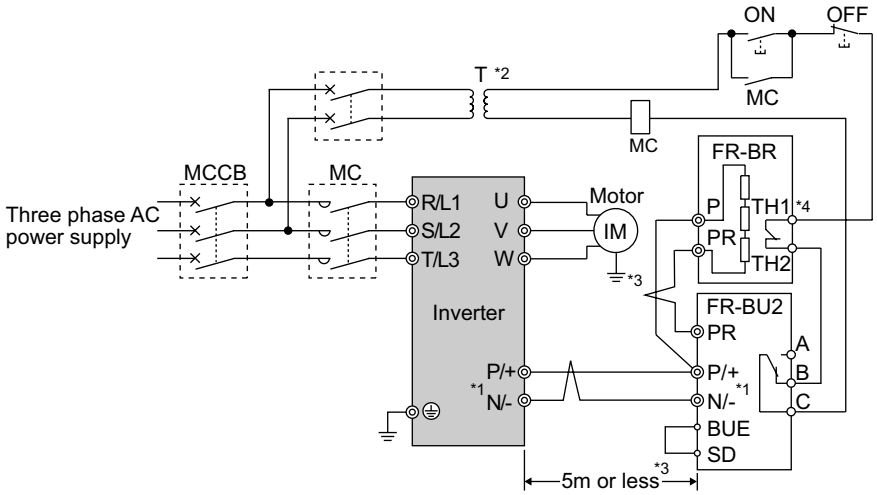

*1 Connect the inverter terminals (P/+, N/-) and brake unit (FR-BU2) terminals so that their terminal names match with each other. (Incorrect connection will damage the inverter and brake unit.)
*2 When the power supply is 400V class, install a step-down transformer.
*3 The wiring distance between the inverter, brake unit (FR-BU) and resistor unit (FR-BR) should be within 5m (16.4feet). Even when the wiring is twisted, the cable length must not exceed 10m (32.8feet).
*4 Normal: across TH1 and TH2...close, Alarm: across TH1 and TH2...open

CAUTION

- Do not remove a jumper across terminal P/+ and P1 except when connecting a DC reactor.

(3) Connection example with MT-BR5 type resistor unit

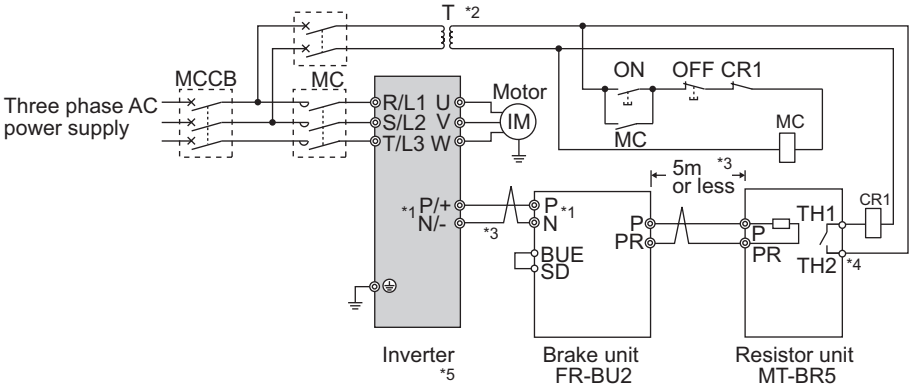

*1 Connect the inverter terminals (P/+, N/-) and brake unit (FR-BU2) terminals so that their terminal names match with each other. (Incorrect connection will damage the inverter and brake unit.)
*2 When the power supply is 400V class, install a step-down transformer.
*3 The wiring distance between the inverter, brake unit (FR-BU2) and resistor unit (MT-BR5) should be within 5m (16.4feet). If twisted wires are used, the distance should be within 10m (32.8feet).
*4 Normal: across TH1 and TH2...open, Alarm: across TH1 and TH2...close
*5 CN8 connector used with the MT-BU5 type brake unit is not used.

CAUTION

- Set "2" in *Pr. 0 Brake mode selection* of the FR-BU2 to use MT-BR5 type resistor unit.

2.4.2 Connection of the brake unit (FR-BU/MT-BU5)

When connecting the brake unit (FR-BU(H)/MT-BU5) to improve the brake capability at deceleration, make connection as shown below.

(1) Connection with the FR-BU (FR-F720-02330 (FR-F740-01160) or less)

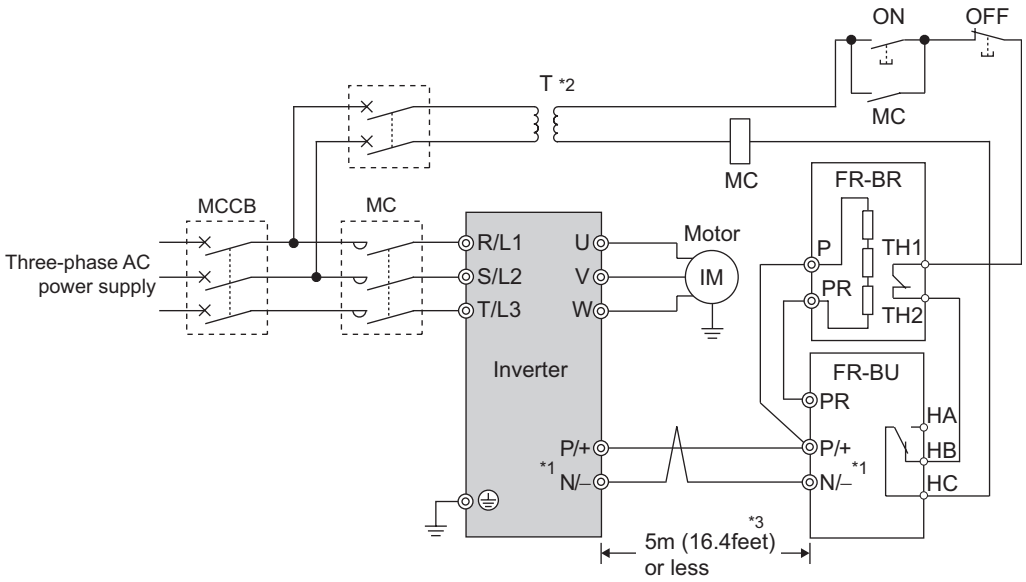

*1 Connect the inverter terminals (P/+, N/-) and brake unit (FR-BU (H)) terminals so that their terminal signals match with each other. (Incorrect connection will damage the inverter.)
*2 When the power supply is 400V class, install a step-down transformer.
*3 The wiring distance between the inverter, brake unit (FR-BU) and resistor unit (FR-BR) should be within 5m(16.4 feet). If twisted wires are used, the distance should be within 10m(32.8feet).

CAUTION

- If the transistors in the brake unit should become faulty, the resistor can be unusually hot, causing a fire. Therefore, install a magnetic contactor on the inverter's input side to configure a circuit so that a current is shut off in case of fault.
- Do not remove a jumper across terminal P/+ and P1 except when connecting a DC reactor.

(2) Connection with the MT-BU5 (FR-F720-03160 (FR-F740-01800) or more)

After making sure that the wiring is correct, set "1" in *Pr.30 Regenerative function selection*. (*Refer to page 114*)

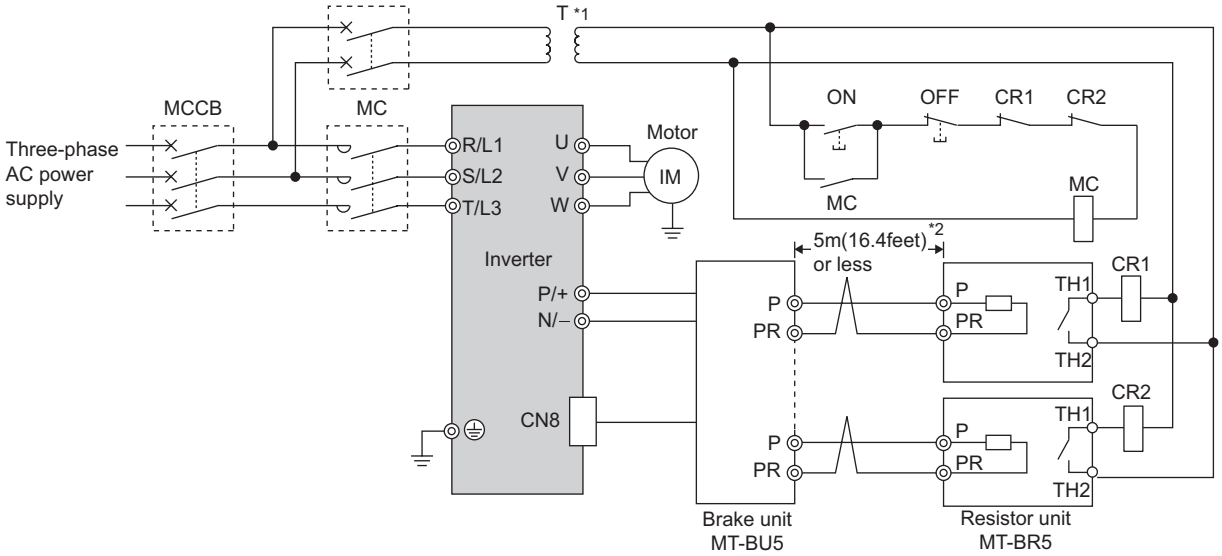

*1 When the power supply is 400V class, install a step-down transformer.
*2 The wiring length between the resistor unit and brake resistor should be 10m(32.8feet) maximum when wires are twisted and 5m(16.4feet) maximum when wires are not twisted.

CAUTION

- Install the brake unit in a place where a cooling air reaches the brake unit heatsink and within a distance of the cable supplied with the brake unit reaches the inverter.
- For wiring of the brake unit and inverter, use an accessory cable supplied with the brake unit. Connect the main circuit cable to the inverter terminals P/+ and N/- and connect the control circuit cable to the CN8 connector inside by making cuts in the rubber bush at the top of the inverter for leading the cable.
- The brake unit which uses multiple resistor units has terminals equal to the number of resistor units. Connect one resistor unit to one pair of terminal (P, PR).

<Inserting the CN8 connector>

Make cuts in rubber bush of the upper portion of the inverter and lead a cable.

1) Make cuts in the rubber bush for leading the CN8 connector cable with a nipper or cutter knife.

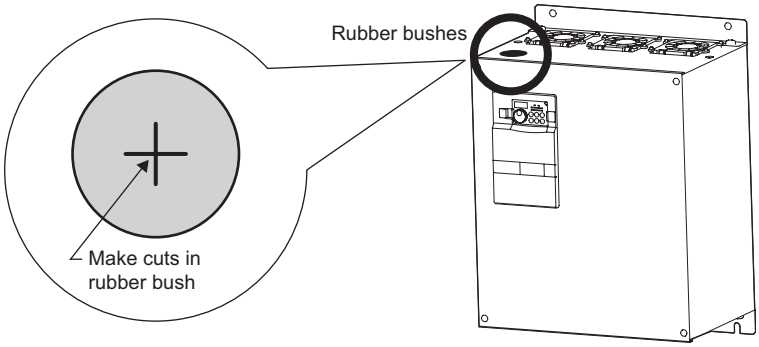

2) Insert a connector on the MT-BU5 side through a rubber bush to connect to a connector on the inverter side.

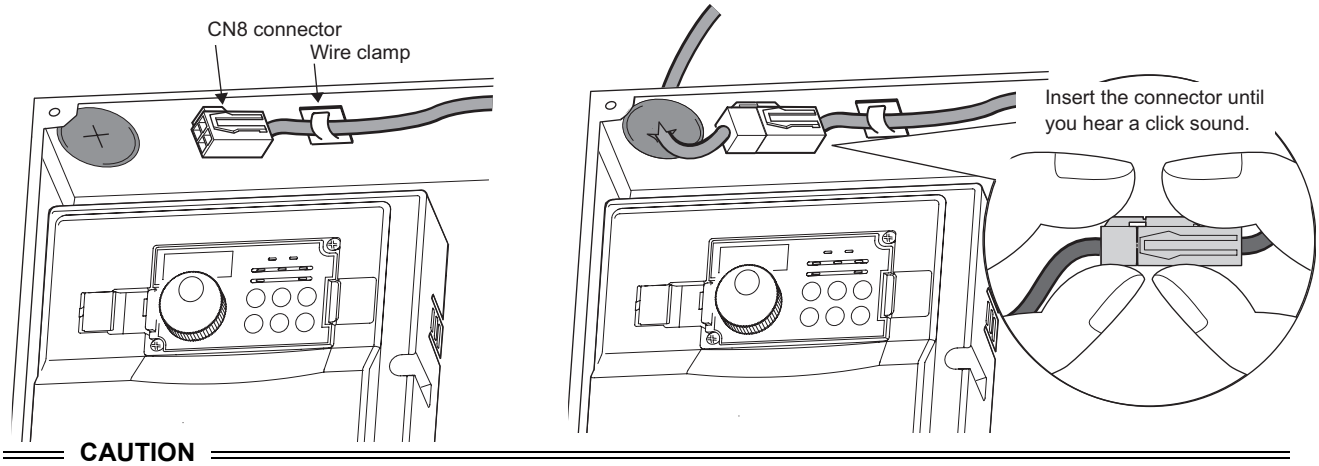

CAUTION

Clamp the CN8 connector cable on the inverter side with a wire clamp securely.

♦ Parameters referred to

Pr. 30 Regenerative function selection ☞ *Refer to page 114*
Pr. 70 Special regenerative brake duty ☞ *Refer to page 114*

2.4.3 Connection of the brake unit (BU type)

Connect the brake unit (BU type) correctly as shown below. Incorrect connection will damage the inverter. Remove the jumper across terminals HB and PC and terminals TB and HC of the brake unit and fit it to across terminals PC and TB.

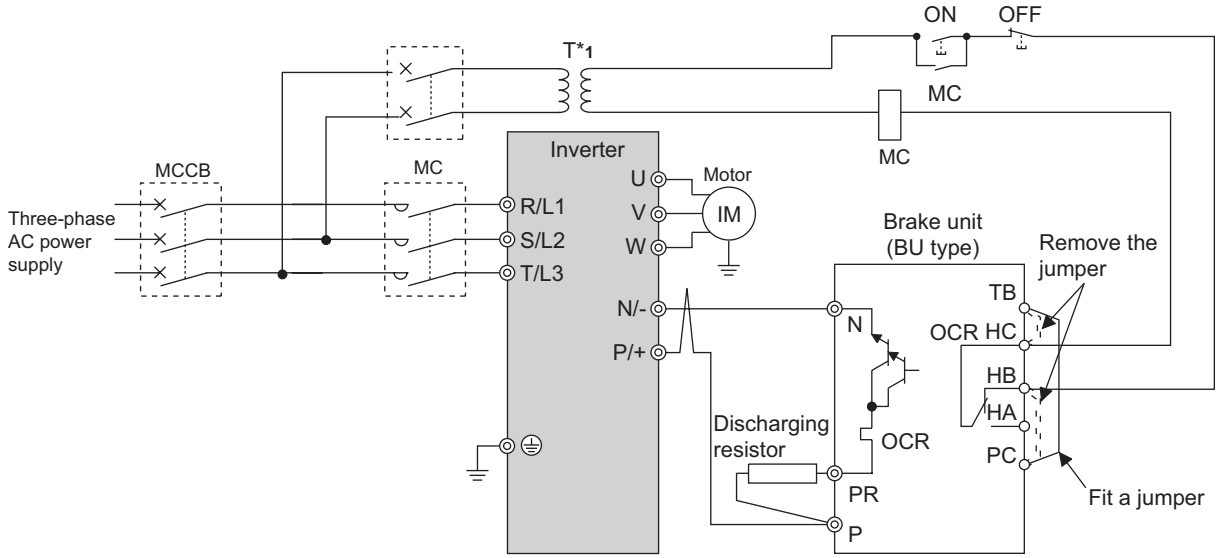

*1 When the power supply is 400V class, install a step-down transformer.

CAUTION

- The wiring distance between the inverter, brake unit and discharging resistor should be within 2m(6.56feet). If twisted wires are used, the distance should be within 5m(16.4feet).
- If the transistors in the brake unit should become faulty, the resistor can be unusually hot, causing a fire. Therefore, install a magnetic contactor on the inverter's power supply side to shut off a current in case of fault.
- Do not remove a jumper across terminal P/+ and P1 except when connecting a DC reactor.

2.4.4 Connection of the high power factor converter (FR-HC/MT-HC)

When connecting the high power factor converter (FR-HC) to suppress power harmonics, perform wiring securely as shown below. Incorrect connection will damage the high power factor converter and inverter.
After making sure that the wiring is correct, set "2" in *Pr. 30 Regenerative function selection*. (*Refer to page 114*.)

(1) Connection with the FR-HC (FR-F720-02330 (FR-F740-01160) or less)

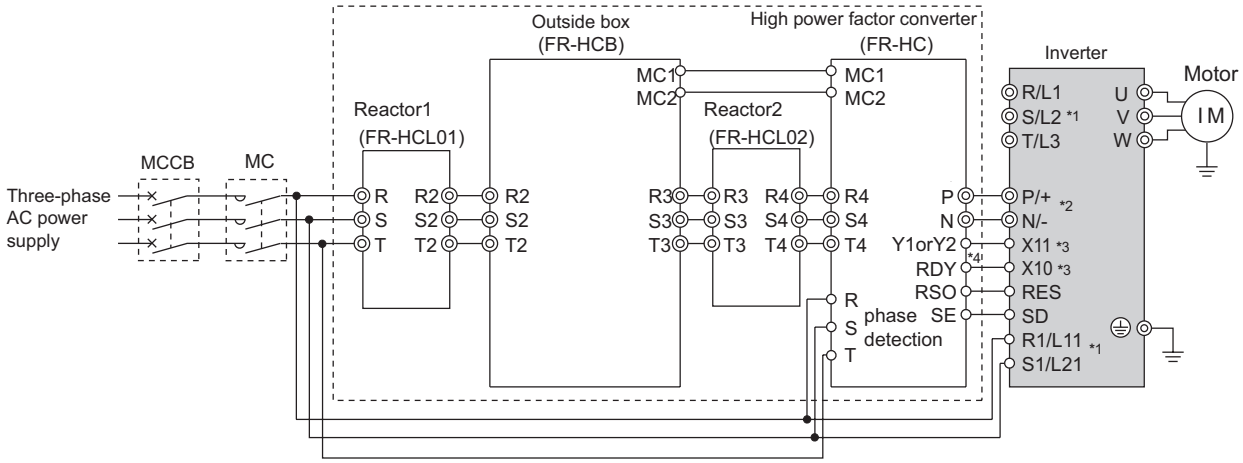

*1 Remove the jumpers across the inverter terminals R/L1 and R1/L11, S/L2 and S1/L21, and connect the control circuit power supply to the R1/L11 and S1/L21 terminals. Do not connect anything to the power input terminals R/L1, S/L2, T/L3. Incorrect connection will damage the inverter. (E.OPT (option fault) will occur. (*Refer to page 342.*))

*2 Do not insert the MCCB between terminals P/+ and N/- (P/+ and P/+, N/- and N/-). Opposite polarity of terminals N/-, P/+ will damage the inverter.

*3 Use *Pr. 178 to Pr. 189 (input terminal function selection)* to assign the terminals used for the X10 (X11) signal. (*Refer to page 122.)*
For communication where the start command is sent only once, e.g. RS-485 communication operation, use the X11 signal when making setting to hold the mode at occurrence of an instantaneous power failure. (*Refer to page 114.)*

*4 Be sure to connect terminal RDY of the FR-HC to the X10 signal or MRS signal assigned terminal of the inverter, and connect terminal SE of the FR-HC to terminal SD of the inverter. Without proper connecting, FR-HC will be damaged.

CAUTION

- The voltage phases of terminals R/L1, S/L2, T/L3 and terminals R4, S4, T4 must be matched.
- Use sink logic (initial setting) when the FR-HC is connected. The FR-HC cannot be connected when source logic is selected.
- Do not remove a jumper across terminal P/+ and P1 except when connecting a DC reactor.

(2) Connection with the MT-HC (FR-F720-03160 (FR-F740-01800) or more)

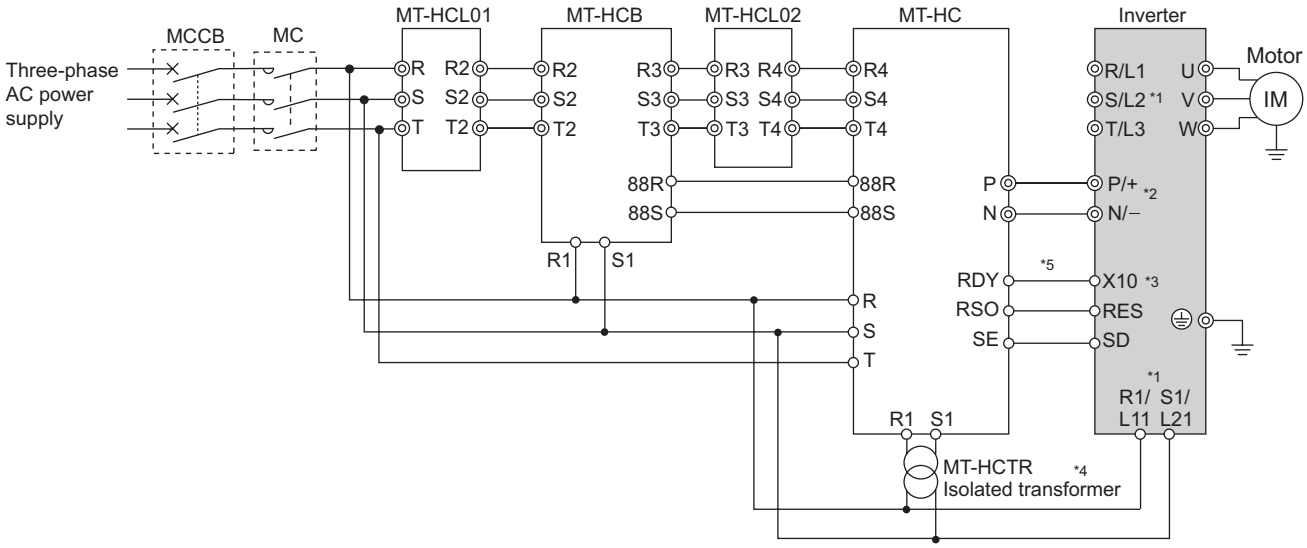

*1 Remove the jumper across terminals R and R1, S and S1 of the inverter, and connect the control circuit power supply to the R1 and S1 terminals. Do not connect anything to the power input terminals R/L1, S/L2, T/L3. Incorrect connection will damage the inverter. (E.OPT (option fault) will occur. (*Refer to page 342.*)

*2 Do not insert the MCCB between terminals P/+ and N/- (P/+ and P/+, N/- and N/-). Opposite polarity of terminals N, P will damage the inverter.

*3 Use *Pr. 178 to Pr. 189 (input terminal function selection)* to assign the terminals used for the X10 (X11) signal. (*Refer to page 122.)* For communication where the start command is sent only once, e.g. RS-485 communication operation, use the X11 signal when making setting to hold the mode at occurrence of an instantaneous power failure. *(Refer to page 114.)*

*4 Connect the power supply to terminals R1 and S1 of the MT-HC via an isolated transformer.

*5 Be sure to connect terminal RDY of the MT-HC to the X10 signal or MRS signal assigned terminal of the inverter, and connect terminal SE of the MT-HC to terminal SD of the inverter. Without proper connecting, MT-HC will be damaged.

CAUTION

- Use sink logic (initial setting) when the MT-HC is connected. The MT-HC cannot be connected when source logic is selected.
- The voltage phases of terminals R/L1, S/L2, T/L3 and terminals R4, S4, T4 must be matched.
- When connecting the inverter to the MT-HC, do not connect the DC reactor provided to the inverter.

♦ Parameters referred to

Pr. 30 Regenerative function selection ☞ *Refer to page 114*

2.4.5 Connection of the power regeneration common converter (FR-CV) (FR-F720-02330 (FR-F740-01160) or less)

When connecting the power regeneration common converter (FR-CV), make connection so that the inverter terminals (P/+, N/-) and the terminal symbols of the power regeneration common converter (FR-CV) are the same.
After making sure that the wiring is correct, set "2" in *Pr. 30 Regenerative function selection*. *(Refer to page 114.)*

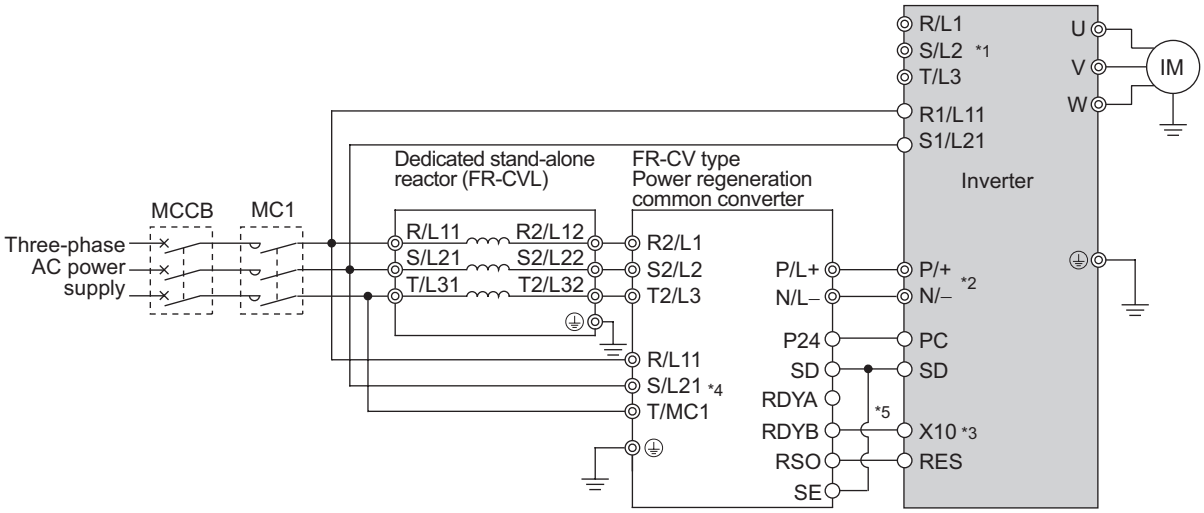

*1 Remove the jumpers across terminals R/L1 and R1/L11, S/L2 and S1/L21 of the inverter, and connect the control circuit power supply across terminals R1/L11 and S1/L21. Do not connect anything to the power input terminals R/L1, S/L2, T/L3. Incorrect connection will damage the inverter. (E.OPT (option fault) will occur. *(Refer to page 342.)*)

*2 Do not insert an MCCB between the terminals P/+ and N/- (between P/L+ and P/+, between N/L- and N/-). Opposite polarity of terminals N/-, P/+ will damage the inverter.

*3 Assign the terminal for X10 signal using any of *Pr. 178 to Pr. 189 (input terminal function selection)*. *(Refer to page 122)*

*4 Be sure to connect the power supply and terminals R/L11, S/L21, T/MC1.
Operating the inverter without connecting them will damage the power regeneration common converter.

*5 Be sure to connect terminal RDYB of the FR-CV to the X10 signal or MRS signal assigned terminal of the inverter, and connect terminal SE of the FR-CV to terminal SD of the inverter. Without proper connecting, FR-CV will be damaged.

CAUTION

- The voltage phases of terminals R/L11, S/L21, T/MC1 and terminals R2/L1, S2/L2, T2/L3 must be matched.
- Use sink logic (initial setting) when the FR-CV is connected. The FR-CV cannot be connected when source logic is selected.
- Do not remove a jumper across terminal P/+ and P1.

♦ Parameters referred to

Pr. 30 Regenerative function selection ☞ *Refer to page 114*

2.4.6 Connection of the power regeneration converter (MT-RC) (FR-F720-03160 (FR-F740-01800) or more)

When connecting a power regeneration converter (MT-RC), perform wiring securely as shown below. Incorrect connection will damage the regeneration converter and inverter. After connecting securely, set "1" in *Pr. 30 Regenerative function selection* and "0" in *Pr. 70 Special regenerative brake duty*.

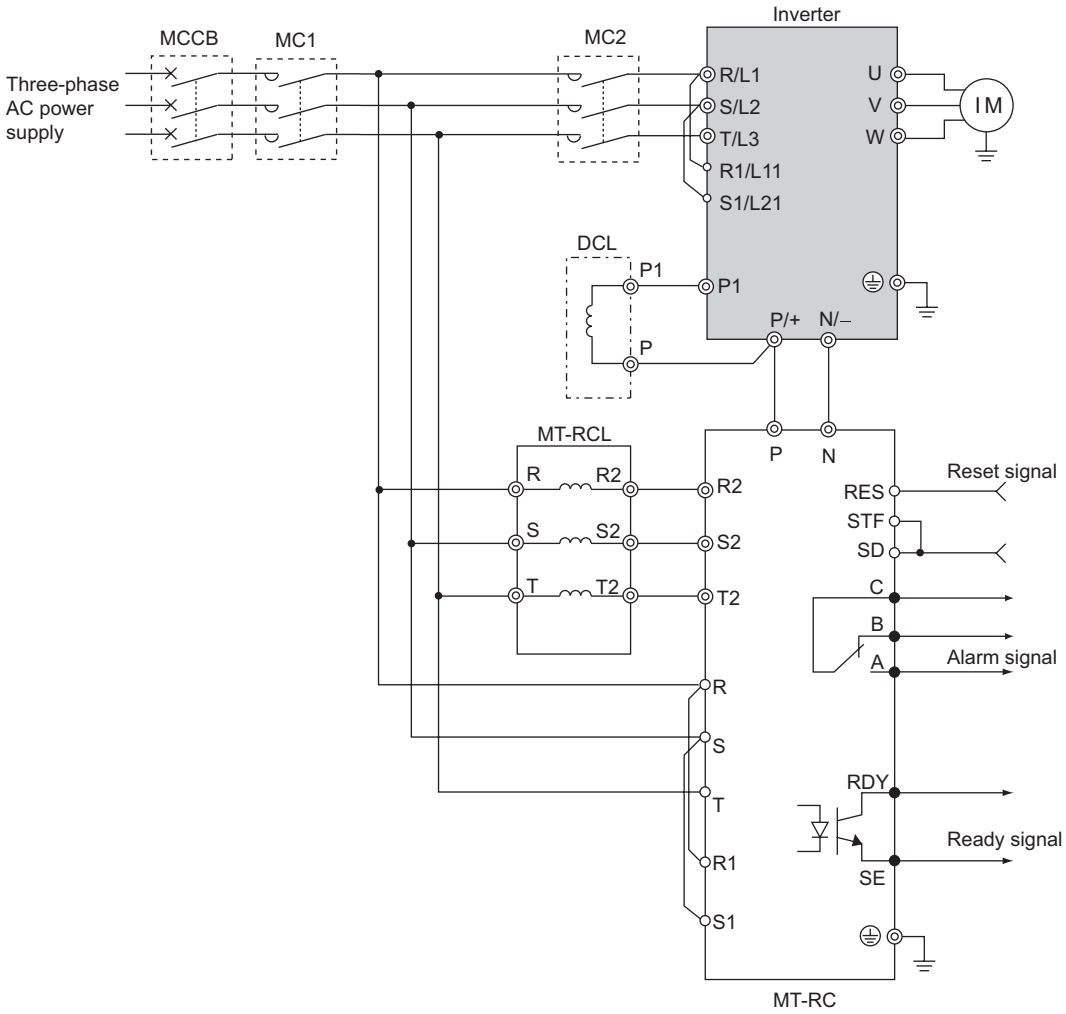

CAUTION

- When using the FR-F700 series together with the MT-RC, install a magnetic contactor (MC) at the input side of the inverter so that power is supplied to the inverter after 1s or more has elapsed after powering ON the MT-RC. When power is supplied to the inverter prior to the MT-RC, the inverter and the MT-RC may be damaged or the MCCB may trip or be damaged.
- Refer to the MT-RC manual for precautions for connecting the power coordination reactor and others.

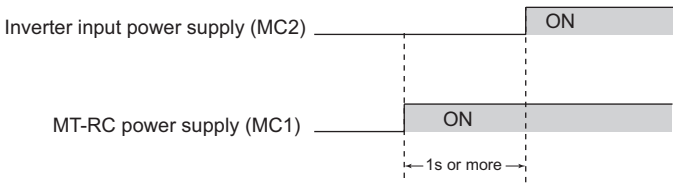

♦ Parameters referred to

Pr. 30 Regenerative function selection ☞ *Refer to page 114*
Pr. 70 Special regenerative brake duty ☞ *Refer to page 114*

2.4.7 Connection of the power factor improving DC reactor (FR-HEL)

(1) Keep the surrounding air temperature within the permissible range (-10°C to +50°C). Keep enough clearance around the reactor because it heats up. (Take 10cm (3.94 inches) or more clearance on top and bottom and 5cm (1.97 inches) or more on left and right regardless of the installation direction.)

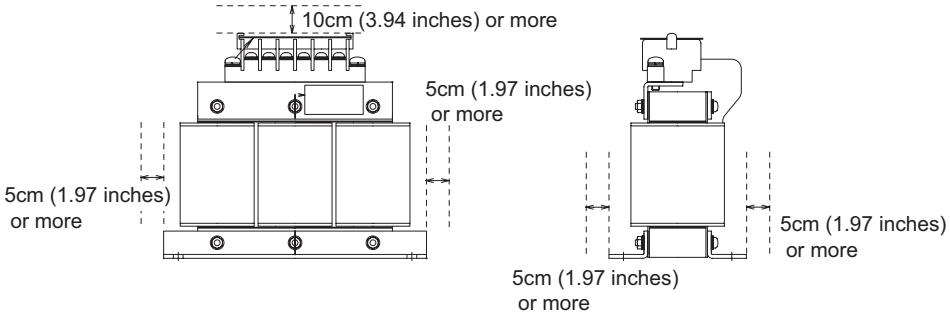

(2) When using the DC reactor (FR-HEL), connect it between terminals P1 and P/+.
For the FR-F720-02330 (FR-F740-01160) or less, the jumper connected across terminals P1 and P/+ must be removed. Otherwise, the reactor will not exhibit its performance.
For the FR-F720-03160 (FR-F740-01800) or more, a DC reactor is supplied. Always install the reactor.

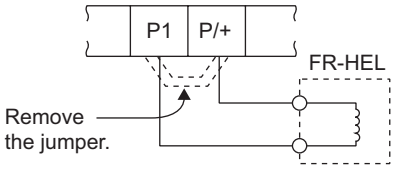

CAUTION

- The wiring distance should be within 5m(16.4feet).
- The size of the cables used should be equal to or larger than that of the power supply cables (R/L1, S/L2, T/L3). *(Refer to page 21)*

3 PRECAUTIONS FOR USE OF THE INVERTER

This chapter explains the "PRECAUTIONS FOR USE OF THE INVERTER" for use of this product.
Always read the instructions before using the equipment.

3.1 EMC and leakage currents 46
3.2 Installation of a reactor 51
3.3 Power-OFF and magnetic contactor (MC)..... 51
3.4 Inverter-driven 400V class motor..... 52
3.5 Precautions for use of the inverter..... 53
3.6 Failsafe of the system which uses the inverter..... 55

3.1 EMC and leakage currents

3.1.1 Leakage currents and countermeasures

Capacitances exist between the inverter I/O cables, other cables and earth and in the motor, through which a leakage current flows. Since its value depends on the static capacitances, carrier frequency, etc., low acoustic noise operation at the increased carrier frequency of the inverter will increase the leakage current. Therefore, take the following measures. Select the earth leakage circuit breaker according to its rated sensitivity current, independently of the carrier frequency setting.

(1) To-ground leakage currents

Leakage currents may flow not only into the inverter's own line but also into the other lines through the ground cable, etc. These leakage currents may operate ground leakage circuit breakers and earth leakage relays unnecessarily.

- Suppression technique
  - If the carrier frequency setting is high, decrease the *Pr. 72 PWM frequency selection* setting. Note that motor noise increases.Selecting *Pr. 240 Soft-PWM operation selection* makes the sound inoffensive.
  - By using earth leakage circuit breakers designed for harmonic and surge suppression in the inverter's own line and other line, operation can be performed with the carrier frequency kept high (with low noise).
- To-ground leakage currents
  - Take caution as long wiring will increase the leakage current. Decreasing the carrier frequency of the inverter reduces the leakage current.
  - Increasing the motor capacity increases the leakage current. The leakage current of the 400V class is larger than that of the 200V class.

(2) Line-to-line leakage currents

Harmonics of leakage currents flowing in static capacitances between the inverter output cables may operate the external thermal relay unnecessarily. When the wiring length is long (50m (164.04feet) or more) for the 400V class small-capacity model (FR-F740-00170 or less), the external thermal relay is likely to operate unnecessarily because the ratio of the leakage current to the rated motor current increases.

- Line-to-line leakage current data example(200V class)

Motor Capacity (kW(HP))	Rated Motor Current(A)	Leakage Currents(mA)	
		Wiring length 50m(164.04feet)	Wiring length 100m(328.08feet)
0.4(1/2)	1.8	310	500
0.75(1)	3.2	340	530
1.5(2)	5.8	370	560
2.2(3)	8.1	400	590
3.7(5)	12.8	440	630
5.5(7.5)	19.4	490	680
7.5(10)	25.6	535	725

·Motor: SF-JR 4P
·Carrier frequency: 14.5kHz
·Used wire: 2mm^2, 4cores Cabtyre cable

*The leakage currents of the 400V class are about twice as large.

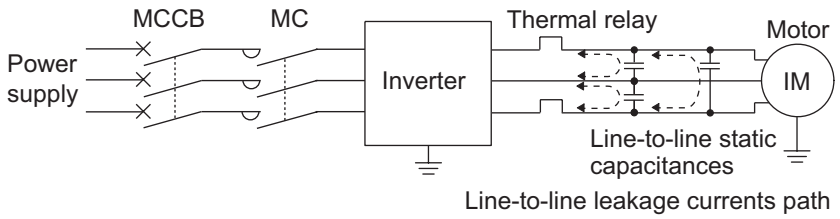

- Measures
  - Use *Pr. 9 Electronic thermal O/L relay*.
  - If the carrier frequency setting is high, decrease the *Pr. 72 PWM frequency selection* setting. Note that motor noise increases. Selecting *Pr. 240 Soft-PWM operation selection* makes the sound inoffensive. To ensure that the motor is protected against line-to-line leakage currents, it is recommended to use a temperature sensor to directly detect motor temperature.
- Installation and selection of moulded case circuit breaker

  Install a moulded case circuit breaker (MCCB) on the power receiving side to protect the wiring of the inverter input side. Select the MCCB according to the inverter input side power factor (which depends on the power supply voltage, output frequency and load). Especially for a completely electromagnetic MCCB, one of a slightly large capacity must be selected since its operation characteristic varies with harmonic currents. (Check it in the data of the corresponding breaker.) As an earth leakage circuit breaker, use the Mitsubishi earth leakage circuit breaker designed for harmonics and surge suppression.

(3) Selection of rated sensitivity current of earth leakage circuit breaker

When using the earth leakage current breaker with the inverter circuit, select its rated sensitivity current as follows, independently of the PWM carrier frequency:

- Breaker designed for harmonic and surge suppression
  Rated sensitivity current:
  $I\Delta n \geq 10 \times (Ig1 + Ign + Igi + Ig2 + Igm)$
- Standard breaker
  Rated sensitivity current:
  $I\Delta n \geq 10 \times \{Ig1 + Ign + Igi + 3 \times (Ig2 + Igm)\}$

Ig1, Ig2: Leakage currents in wire path during commercial power supply operation
Ign: Leakage current of inverter input side noise filter
Igm: Leakage current of motor during commercial power supply operation
Igi: Leakage current of inverter unit

Example of leakage current of cable path per 1km during the commercial power supply operation when the CV cable is routed in metal conduit (200V 60Hz)

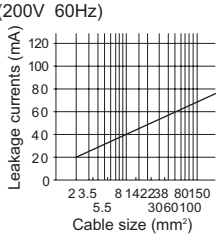

Leakage current example of three-phase induction motor during the commercial power supply operation (200V 60Hz)

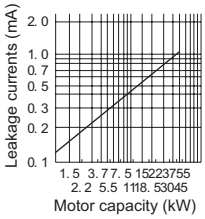

Example of leakage current per 1km during the commercial power supply operation when the CV cable is routed in metal conduit (Three-phase three-wire delta connection 400V60Hz)

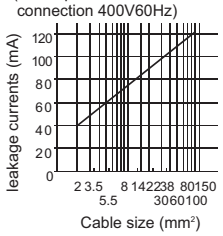

Leakage current example of three-phase induction motor during the commercial power supply operation (Totally-enclosed fan-cooled type motor 400V60Hz)

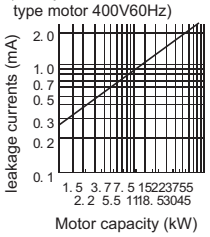

For "⅄" connection, the amount of leakage current is appox.1/3 of the above value.

Example

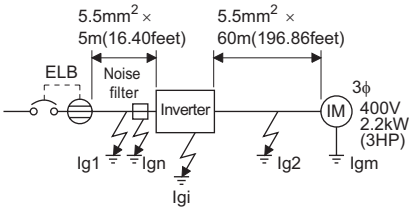

●Selection example (in the case of the left figure (400V class ⅄ connection))

	Breaker Designed for Harmonic and Surge Suppression	Standard Breaker
Leakage current Ig1 (mA)	$\frac{1}{3} \times 66 \times \frac{5m(16.40feet)}{1000m(3280.80feet)} = 0.11$	
Leakage current Ign (mA)	0 (without noise filter)	
Leakage current Igi (mA)	1 (without EMC filter) Refer to the following table for the leakage current of the inverter*	
Leakage current Ig2 (mA)	$\frac{1}{3} \times 66 \times \frac{60m(196.86feet)}{1000m(3280.80feet)} = 1.32$	
Motor leakage current Igm (mA)	0.36	
Total leakage current (mA)	2.79	6.15
Rated sensitivity current (mA)	30	100

* *Refer to page 15* for the presence/absence of the EMC filter.

●Inverter leakage current (with and without EMC filter)

Input power conditions
(200V class: 220V/60Hz, 400V class: 440V/60Hz, power supply unbalance within 3%)

	Voltage (V)	EMC Filter	
		ON (mA)	OFF (mA)
Phase grounding	200	22(1)*	1
	400	30	1
Earthed-neutral system 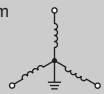	400	1	1

*For the FR-F720-00046 and FR-F720-00077, the EMC filter is always valid. The leakage current is 1mA.

CAUTION

- Install the earth leakage circuit breaker (ELB) on the input side of the inverter.
- In the ⅄ connection earthed-neutral system, the sensitivity current is blunt against an ground fault in the inverter output side. Grounding must conform to the requirements of national and local safety regulations and electrical codes. (NEC section 250, IEC 536 class 1 and other applicable standards)
- When the breaker is installed on the output side of the inverter, it may be unnecessarily operated by harmonics even if the effective value is less than the rating. In this case, do not install the breaker since the eddy current and hysteresis loss will increase, leading to temperature rise.
- The following models are standard breakers....BV-C1, BC-V, NVB, NV-L, NV-G2N, NV-G3NA and NV-2F earth leakage relay (except NV-ZHA), NV with AA neutral wire open-phase protection
  The other models are designed for harmonic and surge suppression....NV-C/NV-S/MN series, NV30-FA, NV50-FA, BV-C2, earth leakage alarm breaker (NF-Z), NV-ZHA, NV-H

3.1.2 EMC measures

Some electromagnetic noises enter the inverter to malfunction it and others are radiated by the inverter to malfunction peripheral devices. Though the inverter is designed to have high immunity performance, it handles low-level signals, so it requires the following basic techniques. Also, since the inverter chops outputs at high carrier frequency, that could generate electromagnetic noises. If these electromagnetic noises cause peripheral devices to malfunction, EMI measures should be taken to suppress noises. These techniques differ slightly depending on EMI paths.

1) Basic techniques
- Do not run the power cables (I/O cables) and signal cables of the inverter in parallel with each other and do not bundle them.
- Use twisted pair shielded cables for the detector connection and control signal cables, and connect the sheathes of the shield cables to terminal SD.
- Ground the inverter, motor, etc. at one point.

2) Techniques to reduce electromagnetic noises that enter and malfunction the inverter (Immunity measures)
When devices that generate many electromagnetic noises (which use magnetic contactors, magnetic brakes, many relays, for example) are installed near the inverter and the inverter may be malfunctioned by electromagnetic noises, the following measures must be taken:
- Provide surge suppressors for devices that generate many electromagnetic noises to suppress electromagnetic noises.
- Fit data line filters to signal cables.
- Ground the shields of the detector connection and control signal cables with cable clamp metal.

3) Techniques to reduce electromagnetic noises that are radiated by the inverter to malfunction peripheral devices (EMI measures)
Inverter-generated electromagnetic noises are largely classified into those radiated by the cables connected to the inverter and inverter main circuits (I/O), those electromagnetically and electrostatically induced to the signal cables of the peripheral devices close to the main circuit power supply, and those transmitted through the power supply cables.

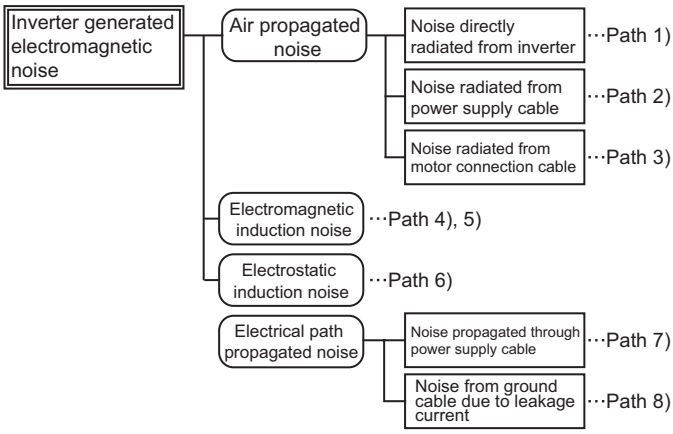

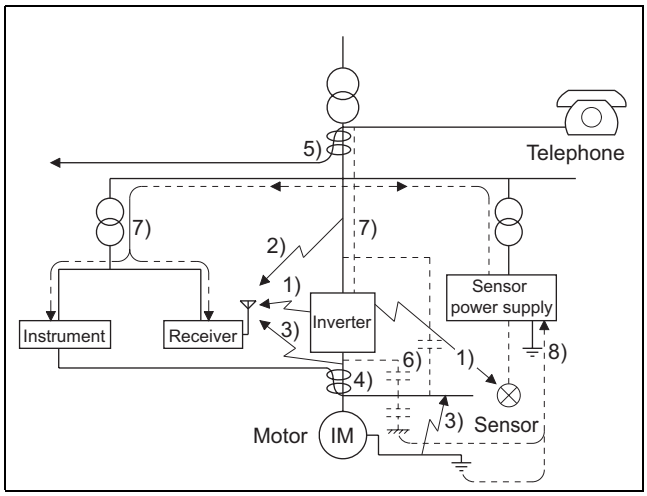

Propagation Path	Measures
1) 2) 3)	When devices that handle low-level signals and are liable to malfunction due to electromagnetic noises, e.g. instruments, receivers and sensors, are contained in the enclosure that contains the inverter or when their signal cables are run near the inverter, the devices may be malfunctioned by air-propagated electromagnetic noises. The following measures must be taken: (1) Install easily affected devices as far away as possible from the inverter. (2) Run easily affected signal cables as far away as possible from the inverter and its I/O cables. (3) Do not run the signal cables and power cables (inverter I/O cables) in parallel with each other and do not bundle them. (4) Set the EMC filter ON/OFF connector of the inverter to the ON position. *(Refer to page 15)* (5) Insert a common mode filters into I/O and capacitors between the input lines to suppress cable-radiated noises. (6) Use shield cables as signal cables and power cables and run them in individual metal conduits to produce further effects.
4) 5) 6)	When the signal cables are run in parallel with or bundled with the power cables, magnetic and static induction noises may be propagated to the signal cables to malfunction the devices and the following measures must be taken: (1) Install easily affected devices as far away as possible from the inverter. (2) Run easily affected signal cables as far away as possible from the I/O cables of the inverter. (3) Do not run the signal cables and power cables (inverter I/O cables) in parallel with each other and do not bundle them. (4) Use shield cables as signal cables and power cables and run them in individual metal conduits to produce further effects.
7)	When the power supplies of the peripheral devices are connected to the power supply of the inverter in the same line, inverter-generated noises may flow back through the power supply cables to malfunction the devices and the following measures must be taken: (1) Set the EMC filter ON/OFF connector of the inverter to the ON position. *(Refer to page 15)* (2) Install the common mode filter (FR-BLF, FR-BSF01) to the power cables (output cable) of the inverter.
8)	When a closed loop circuit is formed by connecting the peripheral device wiring to the inverter, leakage currents may flow through the ground cable of the inverter to malfunction the device. In such a case, disconnection of the ground cable of the device may cause the device to operate properly.

● Data line filter

Data line filter is effective as an EMC measure. Provide a data line filter for the detector cable, etc.

● EMC measures

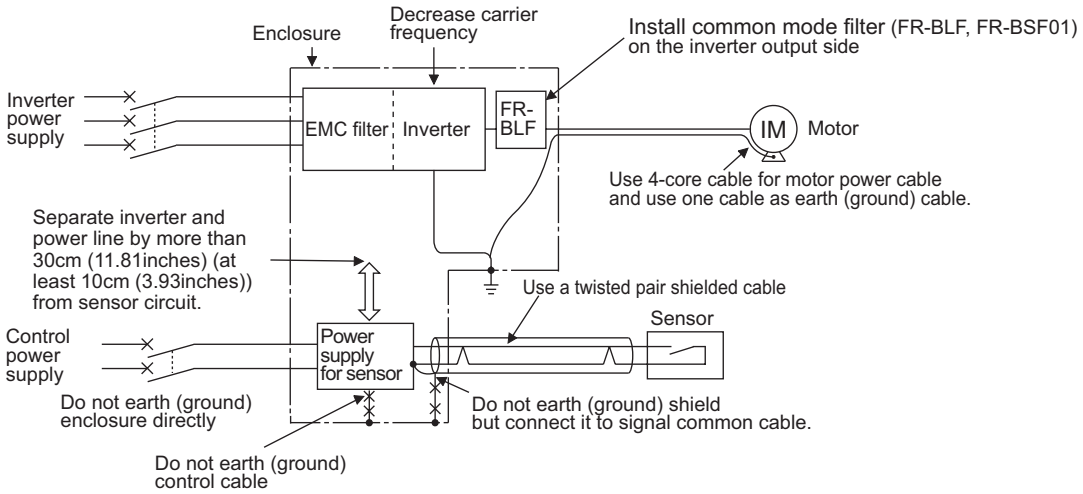

REMARKS

•For compliance with the EU EMC directive, refer to the *Installation Guideline*.

3.1.3 Power supply harmonics

The inverter may generate power supply harmonics from its converter circuit to affect the power generator, power capacitor etc. Power supply harmonics are different from noise and leakage currents in source, frequency band and transmission path. Take the following countermeasure suppression techniques.

● The differences between harmonics and noises are indicated below:

Item	Harmonics	Noise
Frequency	Normally number 40 to 50 max. (3kHz or less)	High frequency (several 10kHz to 1GHz order)
Environment	To-electric channel, power impedance	To-space, distance, wiring path
Quantitative understanding	Theoretical calculation possible	Random occurrence, quantitative grasping difficult
Generated amount	Nearly proportional to load capacity	Depending on the current fluctuation ratio (larger as switching is faster)
Affected equipment immunity	Specified in standard per equipment	Different depending on maker's equipment specifications
Suppression example	Provide reactor.	Increase distance.

● Measures

The harmonic current generated from the inverter to the input side differs according to various conditions such as the wiring impedance, whether a reactor is used or not, and output frequency and output current on the load side.

For the output frequency and output current, we understand that they should be calculated in the conditions under the rated load at the maximum operating frequency.

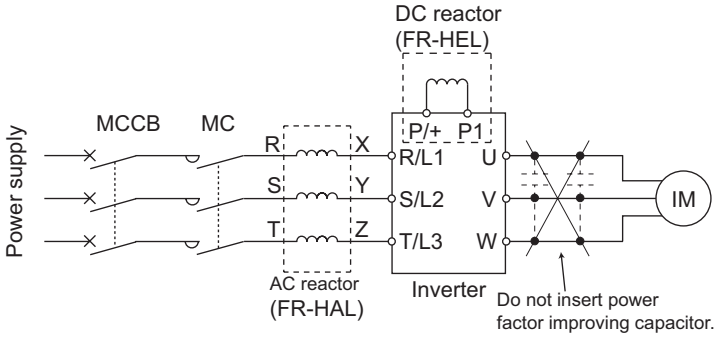

CAUTION

The power factor improving capacitor and surge suppressor on the inverter output side may be overheated or damaged by the high frequency components of the inverter output. Also, since an excessive current flows in the inverter to activate overcurrent protection, do not provide a capacitor and surge suppressor on the inverter output side when the motor is driven by the inverter. For power factor improvement, install a reactor on the inverter input side or in the DC circuit.

3.2 Installation of a reactor

When the inverter is connected near a large-capacity power transformer (1000kVA or more) or when a power capacitor is to be switched over, an excessive peak current may flow in the power input circuit, damaging the converter circuit. To prevent this, always install the AC reactor (FR-HAL)

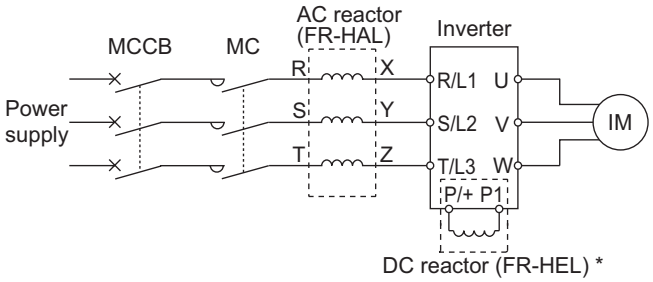

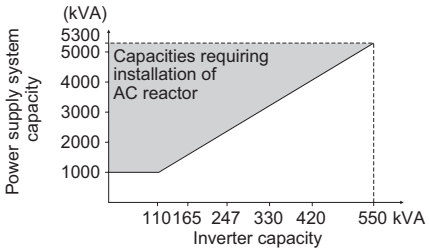

* When connecting the FR-HEL to the FR-F720-02330 (FR-F740-01160) or less, remove the jumper across terminals P/+ and P1. For the FR-F720-03160 (FR-F740-01800) or more, a DC reactor is supplied. Always install the reactor.

REMARKS

The wiring length between the FR-HEL and inverter should be 5m maximum and minimized. Use the same wire size as that of the power supply wire (R/L1, S/L2, T/L3). *(Refer to page 21)*

3.3 Power-OFF and magnetic contactor (MC)

(1) Inverter input side magnetic contactor (MC)

On the inverter input side, it is recommended to provide an MC for the following purposes.

(*Refer to page 4* for selection.)

1) To release the inverter from the power supply when the fault occurs or when the drive is not functioning (e.g. emergency stop operation).
2) To prevent any accident due to an automatic restart at restoration of power after an inverter stop made by a power failure
3) To separate the inverter from the power supply to ensure safe maintenance and inspection work
   The inverter's input side MC is used for the above purpose, select class JEM1038-AC3MC for the inverter input side current when making an emergency stop during normal operation.

REMARKS

Since repeated inrush current at power ON will shorten the life of the converter circuit (switching life is 100 million times (about 500,000 times for FR-F720-01540 or more)), frequent starts/stops must be avoided. Turn ON/OFF the inverter start controlling terminals (STF, STR) to run/stop the inverter.

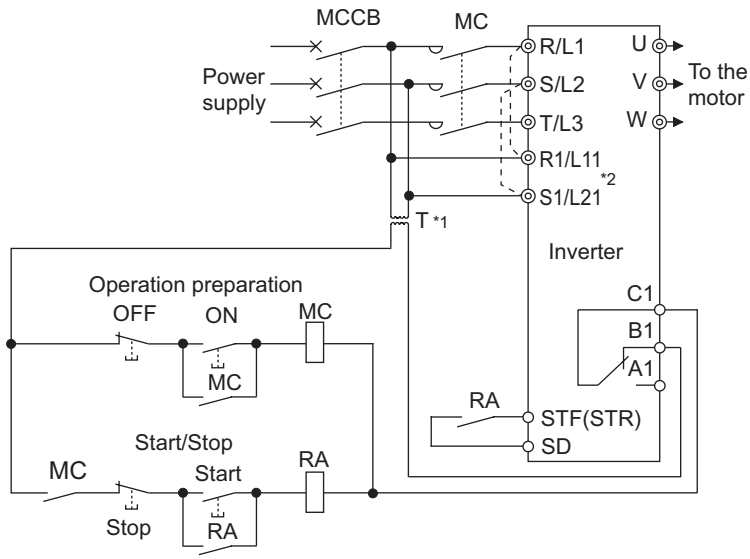

• Inverter start/stop circuit example

As shown on the left, always use the start signal (ON or OFF of STF (STR) signal) to make a start or stop. *(Refer to page 126)*

*1 When the power supply is 400V class, install a step-down transformer.

*2 Connect the power supply terminals R1/L11, S1/L21 of the control circuit to the primary side of the MC to hold an alarm signal when the inverter's protective circuit is activated. At this time, remove jumpers across terminals R/L1 and R1/L11 and S/L2 and S1/L21. (*Refer to page 25* for removal of the jumper.)

(2) Handling of the inverter output side magnetic contactor

Switch the magnetic contactor between the inverter and motor only when both the inverter and motor are at a stop. When the magnetic contactor is turned ON while the inverter is operating, overcurrent protection of the inverter and such will activate. When an MC is provided to switch to a commercial power supply, for example, it is recommended to use bypass operation *Pr. 135 to Pr. 139 (Refer to page 293)*.

3.4 Inverter-driven 400V class motor

In the PWM type inverter, a surge voltage attributable to wiring constants is generated at the motor terminals. Especially for a 400V class motor, the surge voltage may deteriorate the insulation. When the 400V class motor is driven by the inverter, consider the following measures:

● Measures

It is recommended to take either of the following measures:

(1) Rectifying the motor insulation and limiting the PWM carrier frequency according to the wiring length
For the 400V class motor, use an insulation-enhanced motor.
Specifically,
1)Specify the "400V class inverter-driven insulation-enhanced motor".
2)For the dedicated motor such as the constant-torque motor and low-vibration motor, use the "inverter-driven, dedicated motor".
3)Set *Pr. 72 PWM frequency selection* as indicated below according to the wiring length

	Wiring Length		
	50m or less	**50m to 100m**	**exceeding 100m**
Pr. 72 PWM frequency selection	15(14.5kHz) or less	9(9kHz) or less	4(4kHz) or less

(2) Suppressing the surge voltage on the inverter side
Connect the surge voltage suppression filter (FR-ASF-H) to the FR-F720-02330 (FR-F740-01160) or less and the sine wave filter (MT-BSL/BSC) to the FR-F720-03160 (FR-F740-01800) or more on the inverter output side.

CAUTION

- For details of *Pr. 72 PWM frequency selection , refer to page 169*. (When using an optional sine wave filter (MT-BSL/BSC) for the or more, set "25" in *Pr.72* (2.5kHz).)
- For explanation of surge voltage suppression filter (FR-ASF-H) and sine wave filter (MT-BSL/BSC), refer to the manual of each option.

3.5 Precautions for use of the inverter

The FR-F700 series is a highly reliable product, but incorrect peripheral circuit making or operation/handling method may shorten the product life or damage the product.
Before starting operation, always recheck the following items.

(1) Use crimping terminals with insulation sleeve to wire the power supply and motor.

(2) Application of power to the output terminals (U, V, W) of the inverter will damage the inverter. Never perform such wiring.

(3) After wiring, wire offcuts must not be left in the inverter.
Wire offcuts can cause an alarm, failure or malfunction. Always keep the inverter clean. When drilling mounting holes in an enclosure etc., take care not to allow chips and other foreign matter to enter the inverter.

(4) Use cables of the size to make a voltage drop 2% or less.
If the wiring distance is long between the inverter and motor, a main circuit cable voltage drop will cause the motor torque to decrease especially at the output of a low frequency.
Refer to page 21 for the recommended cable sizes.

(5) The overall wiring length should be 500m (1640.4 feet) maximum.
Especially for long distance wiring, the fast-response current limit function may decrease or the equipment connected to the secondary side may malfunction or become faulty under the influence of a charging current due to the stray capacity of the wiring. Therefore, note the overall wiring length. *(Refer to page 24.)*

(6) Electromagnetic wave interference
The input/output (main circuit) of the inverter includes high frequency components, which may interfere with the communication devices (such as AM radios) used near the inverter. In this case, set the EMC filter valid to minimize interference. *(Refer to page 15)*

(7) Do not install a power factor correction capacitor, surge suppressor or capacitor type filter on the inverter output side.
This will cause the inverter to trip or the capacitor and surge suppressor to be damaged. If any of the above devices is installed, immediately remove it.

(8) For some short time after the power is switched OFF, a high voltage remains in the smoothing capacitor.
When accessing the inverter for inspection, wait for at least 10 minutes after the power supply has been switched OFF, and then make sure that the voltage across the main circuit terminals P/+ and N/- of the inverter is not more than 30VDC using a tester, etc.

(9) A short circuit or earth (ground) fault on the inverter output side may damage the inverter modules.
- Fully check the insulation resistance of the circuit prior to inverter operation since repeated short circuits caused by peripheral circuit inadequacy or an earth (ground) fault caused by wiring inadequacy or reduced motor insulation resistance may damage the inverter modules.
- Fully check the to-earth (ground) insulation and phase to phase insulation of the inverter output side before power-ON. Especially for an old motor or use in hostile atmosphere, securely check the motor insulation resistance etc.

(10) Do not use the inverter input side magnetic contactor to start/stop the inverter.
Since repeated inrush currents at power ON will shorten the life of the converter circuit (switching life is about 1,000,000 times (about 500,000 times for FR-F720-01540 or more).), frequent starts and stops of the MC must be avoided. Always use the start signal (ON/OFF of STF and STR signals) to start/stop the inverter. *(Refer to page 14)*

(11) Do not apply a voltage higher than the permissible voltage to the inverter I/O signal circuits.
Application of a voltage higher than the permissible voltage to the inverter I/O signal circuits or opposite polarity may damage the I/O devices. Especially check the wiring to prevent the speed setting potentiometer from being connected incorrectly to short terminals 10E and 5.

(12) Provide electrical and mechanical interlocks for MC1 and MC2 which are used for bypass operation.

When the wiring is incorrect or if there is an electronic bypass circuit as shown on the right, the inverter will be damaged when the power supply is connected to the inverter U, V, W terminals due to arcs generated at the time of switch-over or chattering caused by a sequence error.

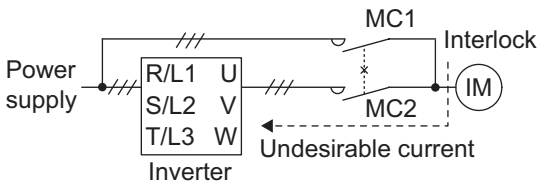

(13) If the machine must not be restarted when power is restored after a power failure, provide a magnetic contactor in the inverter's input side and also make up a sequence which will not switch on the start signal.

If the start signal (start switch) remains on after a power failure, the inverter will automatically restart as soon as the power is restored.

(14) Inverter input side magnetic contactor (MC)

On the inverter input side, provide MC for the following purposes. (*Refer to page 4* for selection.)

1) To release the inverter from the power supply when a fault occurs or when the drive is not functioning (e.g. emergency stop operation). For example, MC avoids overheat or burnout of the brake resistor when heat capacity of the resistor is insufficient or brake regenerative transistor is damaged with short while connecting an optional brake resistor.
2) To prevent any accident due to an automatic restart at restoration of power after an inverter stop made by a power failure
3) To separate the inverter from the power supply to ensure safe maintenance and inspection work.
   The inverter's input side MC is used for the above purpose, select class JEM1038-AC3 MC for the inverter input side current when making an emergency stop during normal operation.

(15) Handling of inverter output side magnetic contactor

Switch the magnetic contactor between the inverter and motor only when both the inverter and motor are at a stop. When the magnetic contactor is turned ON while the inverter is operating, overcurrent protection of the inverter and such will activate. When MC is provided for switching to the commercial power supply, for example, switch it ON/OFF after the inverter and motor have stopped.

(16) Countermeasures against inverter-generated EMI

If electromagnetic noise generated from the inverter causes frequency setting signal to fluctuate and motor rotation speed to be unstable when changing motor speed with analog signal, the following countermeasures are effective.

- Do not run the signal cables and power cables (inverter I/O cables) in parallel with each other and do not bundle them.
- Run signal cables as far away as possible from power cables (inverter I/O cables).
- Use shield cables as signal cables.
- Install a ferrite core on the signal cable (Example: ZCAT3035-1330 TDK).

(17) Instructions for overload operation

When performing an operation of frequent start/stop of the inverter, increase/decrease in the temperature of the transistor element of the inverter may repeat due to a continuous flow of large current, shortening the life from thermal fatigue. Since thermal fatigue is related to the amount of current, the life can be increased by reducing bound current, starting current, etc. Decreasing current may increase the life. However, decreasing current will result in insufficient torque and the inverter may not start. Therefore, increase the inverter capacity to have enough allowance for current.

(18) Make sure that the specifications and rating match the system requirements.

3.6 Failsafe of the system which uses the inverter

When a fault occurs, the inverter trips to output a fault signal. However, a fault output signal may not be output at an inverter fault occurrence when the detection circuit or output circuit fails, etc. Although Mitsubishi assures best quality products, provide an interlock which uses inverter status output signals to prevent accidents such as damage to machine when the inverter fails for some reason and at the same time consider the system configuration where failsafe from outside the inverter, without using the inverter, is enabled even if the inverter fails.

(1) Interlock method which uses the inverter status output signals
By combining the inverter status output signals to provide an interlock as shown below, an inverter alarm can be detected.

No	Interlock Method	Check Method	Used Signals	Refer to Page
1)	Inverter protective function operation	Operation check of an alarm contact Circuit error detection by negative logic	Fault output signal ALM signal	128
2)	Inverter running status	Operation ready signal check	Operation ready signal (RY signal)	128
3)	Inverter running status	Logic check of the start signal and running signal	Start signal (STF signal, STR signal) Running signal (RUN signal)	126, 128
4)	Inverter running status	Logic check of the start signal and output current	Start signal (STF signal, STR signal) Output current detection signal Y12 signal	126, 135

1) Check by the output of the inverter fault signal
When the fault occurs and the inverter trips, the fault output signal (ALM signal) is output (ALM signal is assigned to terminal A1B1C1 in the initial setting).
Check that the inverter functions properly.
In addition, negative logic can be set (ON when the inverter is normal, OFF when the fault occurs).

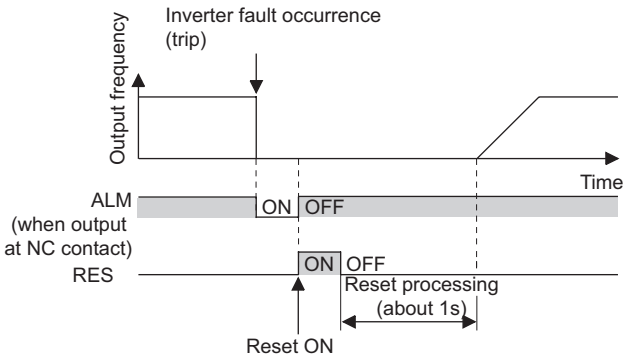

2) Checking the inverter operating status by the inverter operation ready completion signal
Operation ready signal (RY signal) is output when the inverter power is ON and the inverter becomes operative.
Check if the RY signal is output after powering ON the inverter.

3) Checking the inverter operating status by the start signal input to the inverter and inverter running signal.
The inverter running signal (RUN signal) is output when the inverter is running (RUN signal is assigned to terminal RUN in the initial setting).
Check if RUN signal is output when inputting the start signal to the inverter (forward signal is STF signal and reverse signal is STR signal). For logic check, note that RUN signal is output for the period from the inverter decelerates until output to the motor is stopped, configure a sequence considering the inverter deceleration time

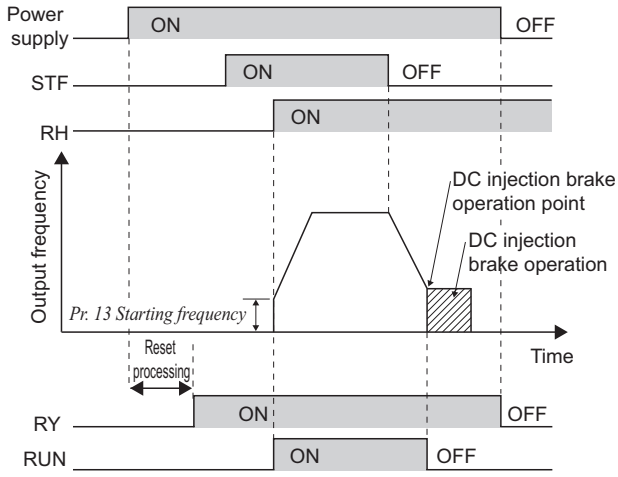

4) Checking the motor operating status by the start signal input to the inverter and inverter output current detection signal.
The output current detection signal (Y12 signal) is output when the inverter operates and currents flows in the motor. Check if Y12 signal is output when inputting the start signal to the inverter (forward signal is STF signal and reverse signal is STR signal). Note that the current level at which Y12 signal is output is set to 110% of the inverter rated current in the initial setting, it is necessary to adjust the level to around 20% using no load current of the motor as reference with *Pr.150 Output current detection level*.
For logic check, as same as the inverter running signal (RUN signal), the inverter outputs for the period from the inverter decelerates until output to the motor is stopped, configure a sequence considering the inverter deceleration time.

Output Signal	*Pr. 190 to Pr. 196* Setting	
	Positive logic	Negative logic
ALM	99	199
RY	11	111
RUN	0	100
Y12	12	112

- When using various signals, assign functions to *Pr. 190 to Pr. 196 (output terminal function selection)* referring to the table on the left.

CAUTION

· Changing the terminal assignment using *Pr. 190 to Pr. 196 (output terminal function selection)* may affect the other functions. Set parameters after confirming the function of each terminal.

(2) Backup method outside the inverter
Even if the interlock is provided by the inverter status signal, enough failsafe is not ensured depending on the failure status of the inverter itself. For example, when the inverter CPU fails, even if the interlock is provided using the inverter fault signal, start signal and RUN signal, there is a case where a fault signal is not output and RUN signal is kept output even if an inverter fault occurs.
Provide a speed detector to detect the motor speed and current detector to detect the motor current and consider the backup system such as checking up as below according to the level of importance of the system.

1) Start signal and actual operation check
Check the motor running and motor current while the start signal is input to the inverter by comparing the start signal to the inverter and detected speed of the speed detector or detected current of the current detector. Note that the motor current runs as the motor is running for the period until the motor stops since the inverter starts decelerating even if the start signal turns off. For the logic check, configure a sequence considering the inverter deceleration time. In addition, it is recommended to check the three-phase current when using the current detector.

2) Command speed and actual operation check
Check if there is no gap between the actual speed and commanded speed by comparing the inverter speed command and detected speed of the speed detector.

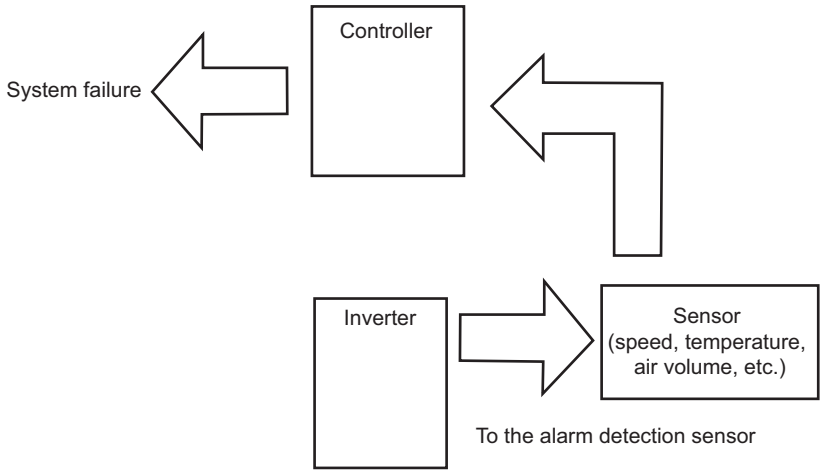

4 PARAMETERS

This chapter explains the "PARAMETERS" for use of this product.
Always read the instructions before using the equipment.

4.1 Operation panel (FR-DU07)

4.1.1 Component of the operation panel (FR-DU07)

To mount the operation panel (FR-DU07) on the enclosure surface, *refer to page 34*.

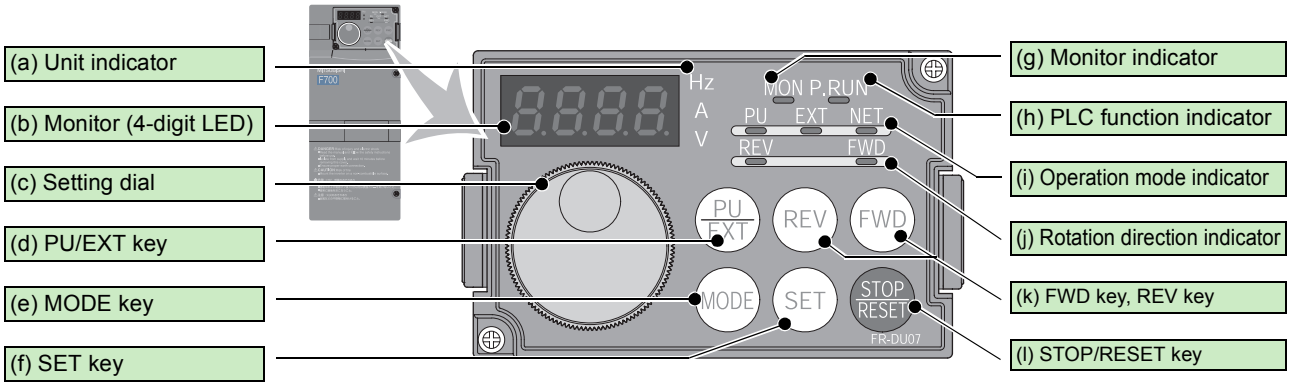

No.	Component	Name	Description
(a)	Hz A V	Unit indicator	Hz: Lit to indicate frequency. (Flickers when the set frequency monitor is displayed.) A: Lit to indicate current. V: Lit to indicate voltage.
(b)	8.8.8.8.	Monitor (4-digit LED)	Shows the frequency, parameter number, etc. (To monitor the output power, the set frequency and other items, set *Pr. 52, Pr. 774 to Pr. 776*.)
(c)		Setting dial	The dial of the Mitsubishi inverters. The setting dial is used to change the frequency and parameter settings. Press the setting dial to perform the following operations: · To display a set frequency in the monitor mode · To display the present setting during calibration · To display a fault history number in the faults history mode
(d)	PU/EXT	PU/EXT key	Used to switch between the PU and External operation modes. To use the External operation mode (operation using a separately connected frequency setting potentiometer and start signal), press this key to light up the EXT indicator. (Press MODE simultaneously (0.5s), or change the *Pr.79* setting to change to the combined operation mode.) PU: PU operation mode EXT: External operation mode Used to cancel the PU stop also.
(e)	MODE	MODE key	Used to switch among different setting modes. Pressing PU/EXT simultaneously changes the operation mode. Holding this key for 2 seconds locks the operation panel.
(f)	SET	SET key	Used to enter a setting. If pressed during the operation, monitored item changes as the following: Output frequency → Output current → Output voltage* * Energy saving monitor is displayed when the energy saving monitor is set with *Pr. 52*.
(g)	MON	Monitor indicator	Lit to indicate the monitor mode.
(h)	P.RUN	PLC function indicator	Lit to indicate that the PLC function is active.
(i)	PU EXT NET	Operation mode indicator	PU: Lit to indicate the PU operation mode. EXT: Lit to indicate the External operation mode. (EXT is lit at power-ON in the initial setting.) NET: Lit to indicate the Network operation mode. PU and EXT: Lit to indicate EXT/PU combined operation mode 1 and 2
(j)	REV FWD	Rotation direction indicator	FWD: Lit to indicate the forward rotation. REV: Lit to indicate the reverse rotation. Lit: When the forward/reverse operation is being performed. Flickers: When the frequency command is not given even if the forward/reverse command is given. When the frequency command is lower than the starting frequency. When the MRS signal is being input.
(k)	FWD REV	FWD key, REV key	FWD key: Used to give a start command in forward rotation. REV key: Used to give a start command in reverse rotation.
(l)	STOP RESET	STOP/RESET key	Used to stop operation commands. Used to reset a fault when the protective function (fault) is activated.

4.1.2 Basic operation (factory setting)

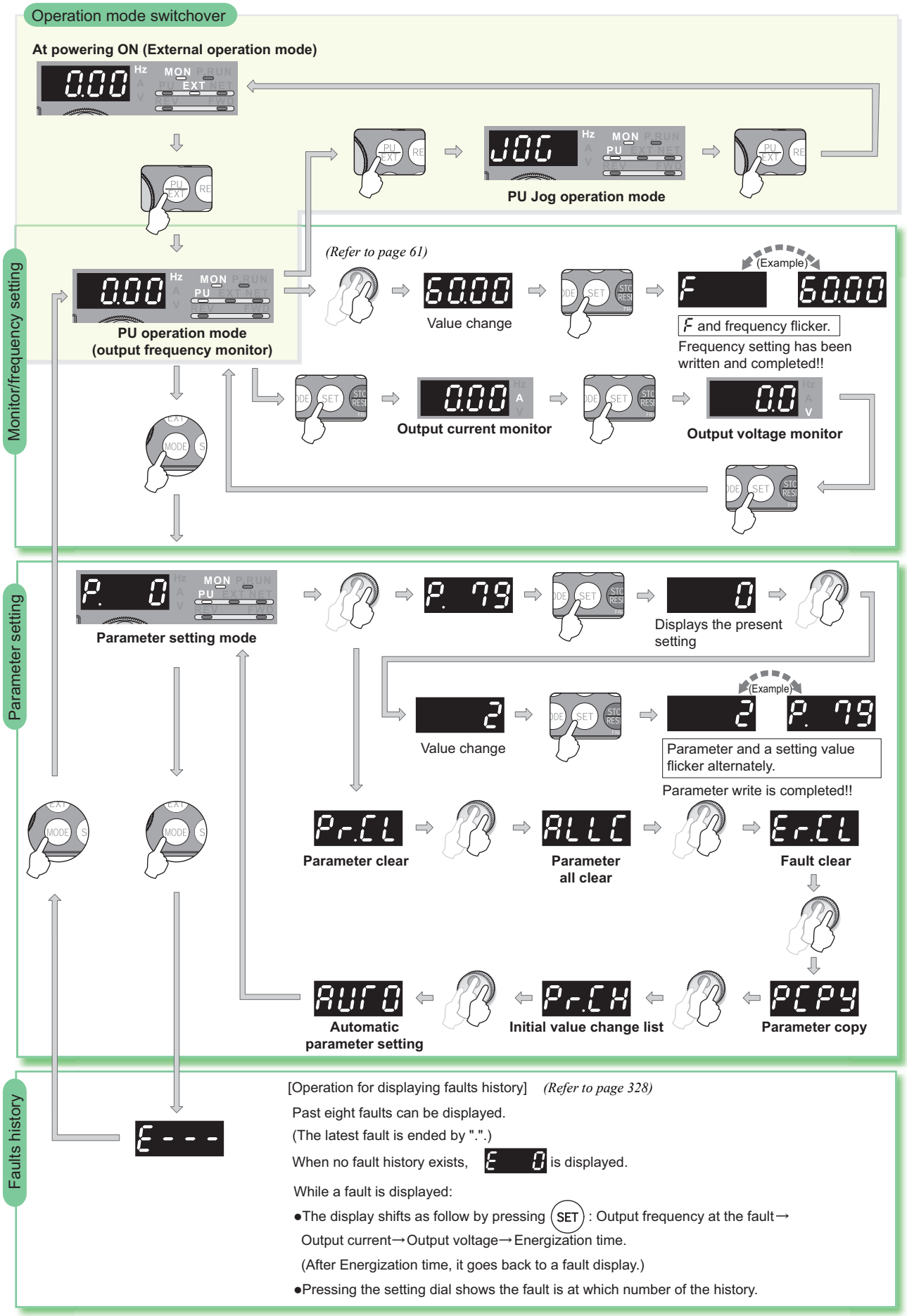

4.1.3 Easy operation mode setting (easy setting mode)

Setting of *Pr. 79 Operation mode selection* according to combination of the start command and speed command can be easily made.

Operation example

Start command: external (STF/STR), frequency command: operate with

Operation — **Display**

1. Screen at powering ON
   The monitor display appears.

2. Press PU/EXT and MODE for 0.5s.

3. Turn until 79-3 appears.
   (refer to the table below for other settings)

Operation Panel Indication	Operation Method	
	Start command	Frequency command
79-1 Flickering	FWD, REV	*
79-2 Flickering	External (STF, STR)	Analog voltage input
79-3 Flickering	External (STF, STR)	*
79-4 Flickering	FWD, REV	Analog voltage input

* To use as a potentiometer, *refer to page 316*.

4. Press SET to set.

Flicker ··· Parameter setting complete!!
The monitor display appears after 3s.

REMARKS

? Er1 is displayed ... Why?
- *Pr. 79* is not registered in user group with "1" in *Pr. 160 User group read selection*.
- Parameter write is disabled with "1" set in *Pr. 77*.

? Er2 is displayed ... Why?
- Setting cannot be changed during operation. Turn the start command (FWD or REV, STF or STR) OFF.

- If MODE is pressed before pressing SET, the easy setting mode is terminated and the display goes back to the monitor display. If the easy setting mode is terminated while *Pr. 79* = "0 (initial setting)," the operation mode switches between the PU operation mode and the External operation mode. Check the operation mode.
- Reset can be made with STOP/RESET.
- The priorities of the frequency commands when *Pr. 79* = "3" are "Multi-speed operation (RL/RM/RH/REX) > PID control (X14) > terminal 4 analog input (AU) > digital input from the operation panel".

4.1.4 Changing the parameter setting value

Changing example | Change the *Pr. 1 Maximum frequency* .

Operation	Display
1. Screen at powering ON The monitor display appears.	0.00 Hz MON EXT
2. Press PU/EXT to choose the PU operation mode.	PU indication is lit. 0.00 PU EXT NET
3. Press MODE to choose the parameter setting mode.	P. 0 (The parameter number read previously appears.)
4. Turn ◎ until P. 1 (*Pr. 1*) appears.	P. 1
5. Press SET to read the present set value. " 120.0"(initial value) appears.	120.0 Hz
6. Turn ◎ to change it to the set value "60.00".	60.00 Hz
7. Press SET to set.	60.00 Hz P. 1

Flicker ··· Parameter setting complete!!

- Turn ◎ to read another parameter.
- Press SET to show the setting again.
- Press SET twice to show the next parameter.
- Press MODE twice to return the monitor to frequency monitor.

? Er 1 to Er 4 are displayed ... Why?

☞ Er 1 appears. ..... Write disable error
Er 2 appears. ..... Write error during operation
Er 3 appears. ..... Calibration error
Er 4 appears. ..... Mode designation error

For details refer to *page 334*.

REMARKS

- The number of digits displayed on the operation panel (FR-DU07) is four. Only the upper four digits of values can be displayed and set. If the values to be displayed have five digits or more including decimal places, the fifth or later numerals cannot be displayed nor set.

  (Example) When *Pr.1*
  When 60Hz is set, 60.00 is displayed.
  When 120Hz is set, 120.0 is displayed. The second decimal places cannot be displayed nor set.

POINT

When *Pr. 77 Parameter write selection* = "0 (initial setting)," the parameter setting change is only available while the inverter is stopped under the PU operation mode. To enable the parameter setting change while the inverter is running or under the operation mode other than PU operation mode, change the *Pr. 77* setting.

4.1.5 Displaying the set frequency

During PU operation mode and External/PU combined operation mode (*Pr. 79* = "3"), push the setting dial ( ) to display the set frequency currently set.

4.2 Parameter list

4.2.1 Parameter list

In the initial setting, only the simple mode parameters are displayed.
Set *Pr. 160 User group read selection* as required.

Parameter	Name	Initial Value	Setting Range	Remarks
160	User group read selection	0	9999	Only the simple mode parameters can be displayed.
			0	Simple mode and extended mode parameters can be displayed.
			1	Only the parameters registered in the user group can be displayed.

REMARKS

- The parameters marked ◎ are the simple mode parameters.
- The parameters marked with [ ] in the table allow its setting to be changed during operation even if "0" (initial value) is set in *Pr. 77 Parameter write selection*.
- Refer to the appendix 2 *(page 390)* for instruction codes for communication and availability of parameter clear, all clear, and parameter copy of each parameter.
- Parameters with Ver.UP have different specifications according to the date assembled. *Refer to page 400* to check the SERIAL number.

Function	Parameters	Name	Setting Range	Minimum Setting Increments	Initial Value	Refer to Page	Customer Setting
Basic functions	◎ 0	Torque boost	0 to 30%	0.1%	6/4/3/2/ 1.5/1% *1	78	
	◎ 1	Maximum frequency	0 to 120Hz	0.01Hz	120/60Hz *2	87	
	◎ 2	Minimum frequency	0 to 120Hz	0.01Hz	0Hz	87	
	◎ 3	Base frequency	0 to 400Hz	0.01Hz	60Hz	89	
	◎ 4	Multi-speed setting (high speed)	0 to 400Hz	0.01Hz	60Hz	93	
	◎ 5	Multi-speed setting (middle speed)	0 to 400Hz	0.01Hz	30Hz	93	
	◎ 6	Multi-speed setting (low speed)	0 to 400Hz	0.01Hz	10Hz	93	
	◎ 7	Acceleration time	0 to 3600/ 360s	0.1/0.01s	5s/15s *3	101	
	◎ 8	Deceleration time	0 to 3600/ 360s	0.1/0.01s	10s/30s *3	101	
	◎ 9	Electronic thermal O/L relay	0 to 500/0 to 3600A	0.01/0.1A	Rated inverter current	107	
DC injection brake	10	DC injection brake operation frequency	0 to 120Hz, 9999	0.01Hz	3Hz	112	
	11	DC injection brake operation time	0 to 10s, 8888	0.1s	0.5s	112	
	12	DC injection brake operation voltage	0 to 30%	0.1%	4/2/1% *4	112	
—	13	Starting frequency	0 to 60Hz	0.01Hz	0.5Hz	104	
—	14	Load pattern selection	0, 1	1	1	91	
Jog operation	15	Jog frequency	0 to 400Hz	0.01Hz	5Hz	95	
	16	Jog acceleration/deceleration time	0 to 3600/360s	0.1/0.01s	0.5s	95	
—	17	MRS input selection	0, 2	1	0	124	
—	18	High speed maximum frequency	120 to 400Hz	0.01Hz	120/60Hz *2	87	
—	19	Base frequency voltage	0 to 1000V, 8888, 9999	0.1V	9999	89	

Function	Parameters	Name	Setting Range	Minimum Setting Increments	Initial Value	Refer to Page	Customer Setting
Acceleration/ deceleration times	20	Acceleration/deceleration reference frequency	1 to 400Hz	0.01Hz	60Hz	101	
	21	Acceleration/deceleration time increments	0, 1	1	0	101	
Stall prevention	22	Stall prevention operation level	0 to 120%, 9999	0.1%	110%	81	
	23	Stall prevention operation level compensation factor at double speed	0 to 150%, 9999	0.1%	9999	81	
Multi-speed setting	24 to 27	Multi-speed setting (4 speed to 7 speed)	0 to 400Hz, 9999	0.01Hz	9999	93	
—	28	Multi-speed input compensation selection	0, 1	1	0	97	
—	29 Ver.UP	Acceleration/deceleration pattern selection	0, 1, 2, 3, 6	1	0	105	
—	30 Ver.UP	Regenerative function selection	0, 2, 10, 20, 100, 120/ 0, 1, 2, 10, 11, 20, 21, 100, 101, 120, 121 *2	1	0	114	
Frequency jump	31	Frequency jump 1A	0 to 400Hz, 9999	0.01Hz	9999	88	
	32	Frequency jump 1B	0 to 400Hz, 9999	0.01Hz	9999	88	
	33	Frequency jump 2A	0 to 400Hz, 9999	0.01Hz	9999	88	
	34	Frequency jump 2B	0 to 400Hz, 9999	0.01Hz	9999	88	
	35	Frequency jump 3A	0 to 400Hz, 9999	0.01Hz	9999	88	
	36	Frequency jump 3B	0 to 400Hz, 9999	0.01Hz	9999	88	
—	37	Speed display	0, 1 to 9998	1	0	139	
Frequency detection	41	Up-to-frequency sensitivity	0 to 100%	0.1%	10%	133	
	42	Output frequency detection	0 to 400Hz	0.01Hz	6Hz	133	
	43	Output frequency detection for reverse rotation	0 to 400Hz, 9999	0.01Hz	9999	133	
Second functions	44	Second acceleration/deceleration time	0 to 3600/360s	0.1/0.01s	5s	101	
	45	Second deceleration time	0 to 3600/360s, 9999	0.1/0.01s	9999	101	
	46	Second torque boost	0 to 30%, 9999	0.1%	9999	78	
	47	Second V/F (base frequency)	0 to 400Hz, 9999	0.01Hz	9999	89	
	48	Second stall prevention operation current	0 to 120%	0.1%	110%	81	
	49	Second stall prevention operation frequency	0 to 400Hz, 9999	0.01Hz	0Hz	81	
	50	Second output frequency detection	0 to 400Hz	0.01Hz	30Hz	133	
	51	Second electronic thermal O/L relay	0 to 500A, 9999/ 0 to 3600A, 9999 *2	0.01/0.1A *2	9999	107	
Monitor functions	52 Ver.UP	DU/PU main display data selection	0, 5, 6, 8 to 14, 17, 20, 23 to 25, 50 to 57, 67, 81 to 86, 100	1	0	141	
	54 Ver.UP	CA terminal function selection	1 to 3, 5, 6, 8 to 14, 17, 21, 24, 50, 52, 53, 67, 70, 85	1	1	141	
	55	Frequency monitoring reference	0 to 400Hz	0.01Hz	60Hz	147	
	56	Current monitoring reference	0 to 500A/0 to 3600A *2	0.01/0.1A *2	Rated inverter current	147	

Function	Parameters	Name	Setting Range	Minimum Setting Increments	Initial Value	Refer to Page	Customer Setting
Automatic restart functions	57	Restart coasting time	0, 0.1 to 5s, 9999/ 0, 0.1 to 30s, 9999 *2	0.1s	9999	152	
	58	Restart cushion time	0 to 60s	0.1s	1s	152	
—	59 Ver.UP	Remote function selection	0, 1, 2, 3, 11, 12, 13	1	0	98	
—	◎ 60	Energy saving control selection	0, 4, 9	1	0	163	
—	65	Retry selection	0 to 5	1	0	159	
—	66	Stall prevention operation reduction starting frequency	0 to 400Hz	0.01Hz	60Hz	81	
Retry	67	Number of retries at fault occurrence	0 to 10, 101 to 110	1	0	159	
	68	Retry waiting time	0 to 10s	0.1s	1s	159	
	69	Retry count display erase	0	1	0	159	
—	70	Special regenerative brake duty	0 to 10%	0.1%	0%	114	
—	71	Applied motor	0, 1, 2, 20	1	0	111	
—	72	PWM frequency selection	0 to 15/0 to 6, 25 *2	1	2	169	
—	73	Analog input selection	0 to 7, 10 to 17	1	1	171	
—	74	Input filter time constant	0 to 8	1	1	176	
—	75	Reset selection/disconnected PU detection/PU stop selection	0 to 3, 14 to 17, 100 to 103, 114 to 117	1	14	186	
—	76	Fault code output selection	0, 1, 2	1	0	161	
—	77	Parameter write selection	0, 1, 2	1	0	189	
—	78	Reverse rotation prevention selection	0, 1, 2	1	0	190	
—	◎ 79	Operation mode selection	0, 1, 2, 3, 4, 6, 7	1	0	195	
Simple magnetic flux vector control	80	Motor capacity	0.4 to 55kW, 9999/ 0 to 3600kW, 9999 *2	0.01/0.1kW	9999	79	
	90	Motor constant (R1)	0 to 50Ω, 9999/ 0 to 400mΩ, 9999 *2	0.001Ω/ 0.01mΩ	9999	79	
Adjustable 5 points V/F	100	V/F1(first frequency)	0 to 400Hz, 9999	0.01Hz	9999	92	
	101	V/F1(first frequency voltage)	0 to 1000V	0.1V	0V	92	
	102	V/F2(second frequency)	0 to 400Hz, 9999	0.01Hz	9999	92	
	103	V/F2(second frequency voltage)	0 to 1000V	0.1V	0V	92	
	104	V/F3(third frequency)	0 to 400Hz, 9999	0.01Hz	9999	92	
	105	V/F3(third frequency voltage)	0 to 1000V	0.1V	0V	92	
	106	V/F4(fourth frequency)	0 to 400Hz, 9999	0.01Hz	9999	92	
	107	V/F4(fourth frequency voltage)	0 to 1000V	0.1V	0V	92	
	108	V/F5(fifth frequency)	0 to 400Hz, 9999	0.01Hz	9999	92	
	109	V/F5(fifth frequency voltage)	0 to 1000V	0.1V	0V	92	
PU connector communication	117	PU communication station number	0 to 31	1	0	214	
	118	PU communication speed	48, 96, 192, 384	1	192	214	
	119	PU communication stop bit length	0, 1, 10, 11	1	1	214	
	120	PU communication parity check	0, 1, 2	1	2	214	
	121	Number of PU communication retries	0 to 10, 9999	1	1	214	
	122	PU communication check time interval	0, 0.1 to 999.8s, 9999	0.1s	9999	214	
	123	PU communication waiting time setting	0 to 150ms, 9999	1	9999	214	
	124	PU communication CR/LF selection	0, 1, 2	1	1	214	

Function	Parameters	Name	Setting Range	Minimum Setting Increments	Initial Value	Refer to Page	Customer Setting
—	◎ 125	Terminal 2 frequency setting gain frequency	0 to 400Hz	0.01Hz	60Hz	177	
—	◎ 126	Terminal 4 frequency setting gain frequency	0 to 400Hz	0.01Hz	60Hz	177	
PID control	127	PID control automatic switchover frequency	0 to 400Hz, 9999	0.01Hz	9999	261	
	128 Ver.UP	PID action selection	10, 11, 20, 21, 50, 51, 60, 61, 70, 71, 80, 81, 90, 91, 100, 101, 110, 111, 120, 121	1	10	261	
	129	PID proportional band	0.1 to 1000%, 9999	0.1%	100%	261	
	130	PID integral time	0.1 to 3600s, 9999	0.1s	1s	261	
	131	PID upper limit	0 to 100%, 9999	0.1%	9999	261	
	132	PID lower limit	0 to 100%, 9999	0.1%	9999	261	
	133	PID action set point	0 to 100%, 9999	0.01%	9999	261	
	134	PID differential time	0.01 to 10.00s, 9999	0.01s	9999	261	
Bypass	135	Electronic bypass sequence selection	0, 1	1	0	293	
	136	MC switchover interlock time	0 to 100s	0.1s	1s	293	
	137	Start waiting time	0 to 100s	0.1s	0.5s	293	
	138	Bypass selection at a fault	0, 1	1	0	293	
	139	Automatic switchover frequency from inverter to bypass operation	0 to 60Hz, 9999	0.01Hz	9999	293	
Backlash measures	140	Backlash acceleration stopping frequency	0 to 400Hz	0.01Hz	1Hz	105	
	141	Backlash acceleration stopping time	0 to 360s	0.1s	0.5s	105	
	142	Backlash deceleration stopping frequency	0 to 400Hz	0.01Hz	1Hz	105	
	143	Backlash deceleration stopping time	0 to 360s	0.1s	0.5s	105	
—	144	Speed setting switchover	0, 2, 4, 6, 8, 10, 102, 104, 106, 108, 110	1	4	139	
PU	145	PU display language selection	0 to 7	1	1	315	
—	147 Ver.UP	Acceleration/deceleration time switching frequency	0 to 400Hz, 9999	0.01Hz	9999	101	
Current detection	148	Stall prevention level at 0V input	0 to 120%	0.1%	110%	81	
	149	Stall prevention level at 10V input	0 to 120%	0.1%	120%	81	
	150	Output current detection level	0 to 120%	0.1%	110%	135	
	151	Output current detection signal delay time	0 to 10s	0.1s	0s	135	
	152	Zero current detection level	0 to 150%	0.1%	5%	135	
	153 Ver.UP	Zero current detection time	0 to 10s	0.01s	0.5s	135	
—	154	Voltage reduction selection during stall prevention operation	0, 1	1	1	81	
—	155	RT signal function validity condition selection	0, 10	1	0	125	
—	156	Stall prevention operation selection	0 to 31, 100, 101	1	0	81	
—	157	OL signal output timer	0 to 25s, 9999	0.1s	0s	81	

Function	Parameters	Name	Setting Range	Minimum Setting Increments	Initial Value	Refer to Page	Customer Setting
—	158 Ver.UP	**AM terminal function selection**	1 to 3, 5, 6, 8 to 14, 17, 21, 24, 50, 52, 53, 67, 70, 86	1	1	141	
—	159	**Automatic switchover frequency range from bypass to inverter operation**	0 to 10Hz, 9999	0.01Hz	9999	293	
—	◎160	**User group read selection**	0, 1, 9999	1	0	190	
—	161	**Frequency setting/key lock operation selection**	0, 1, 10, 11	1	0	315	
Automatic restart functions	162	**Automatic restart after instantaneous power failure selection**	0, 1, 10, 11	1	0	152	
	163	**First cushion time for restart**	0 to 20s	0.1s	0s	152	
	164	**First cushion voltage for restart**	0 to 100%	0.1%	0%	152	
	165	**Stall prevention operation level for restart**	0 to 120%	0.1%	110%	152	
Current detection	166	**Output current detection signal retention time**	0 to 10s, 9999	0.1s	0.1s	135	
	167 Ver.UP	**Output current detection operation selection**	0, 1, 10, 11	1	0	135	
—	168	Parameter for manufacturer setting. Do not set.					
—	169						
Cumulative monitor clear	170	**Watt-hour meter clear**	0, 10, 9999	1	9999	141	
	171	**Operation hour meter clear**	0, 9999	1	9999	141	
User group	172	**User group registered display/batch clear**	9999, (0 to 16)	1	0	190	
	173	**User group registration**	0 to 999, 9999	1	9999	190	
	174	**User group clear**	0 to 999, 9999	1	9999	190	

Function	Parameters	Name	Setting Range	Minimum Setting Increments	Initial Value	Refer to Page	Customer Setting
Input terminal function assignment	178 Ver.UP	STF terminal function selection	0 to 8, 10 to 14, 16, 24, 25, 50, 51, 60, 62, 64 to 67, 70 to 72, 77, 78, 9999	1	60	122	
	179 Ver.UP	STR terminal function selection	0 to 8, 10 to 14, 16, 24, 25, 50, 51, 61, 62, 64 to 67, 70 to 72, 77, 78, 9999	1	61	122	
	180 Ver.UP	RL terminal function selection	0 to 8, 10 to 14, 16, 24, 25, 50, 51, 62, 64 to 67, 70 to 72, 77, 78, 9999	1	0	122	
	181 Ver.UP	RM terminal function selection		1	1	122	
	182 Ver.UP	RH terminal function selection		1	2	122	
	183 Ver.UP	RT terminal function selection		1	3	122	
	184 Ver.UP	AU terminal function selection	0 to 8, 10 to 14, 16, 24, 25, 50, 51, 62 to 67, 70 to 72, 77, 78, 9999	1	4	122	
	185 Ver.UP	JOG terminal function selection	0 to 8, 10 to 14, 16, 24, 25, 50, 51, 62, 64 to 67, 70 to 72, 77, 78, 9999	1	5	122	
	186 Ver.UP	CS terminal function selection		1	6	122	
	187 Ver.UP	MRS terminal function selection		1	24	122	
	188 Ver.UP	STOP terminal function selection		1	25	122	
	189 Ver.UP	RES terminal function selection		1	62	122	
Output terminal function assignment	190 Ver.UP	RUN terminal function selection	0 to 5, 7, 8, 10 to 19, 25, 26, 45 to 54, 64, 67, 70 to 79, 82, 85, 90 to 96, 98, 99, 100 to 105, 107, 108, 110 to 116, 125, 126, 145 to 154, 164, 167, 170, 179, 182, 185, 190 to 196, 198, 199, 9999	1	0	128	
	191 Ver.UP	SU terminal function selection		1	1	128	
	192 Ver.UP	IPF terminal function selection		1	2	128	
	193 Ver.UP	OL terminal function selection		1	3	128	
	194 Ver.UP	FU terminal function selection		1	4	128	
	195 Ver.UP	ABC1 terminal function selection	0 to 5, 7, 8, 10 to 19, 25, 26, 45 to 54, 64, 67, 70 to 79, 82, 85, 90, 91, 94 to 96, 98, 99, 100 to 105, 107, 108, 110 to 116, 125, 126, 145 to 154, 164, 167, 170, 179, 182, 185, 190, 191, 194 to 196, 198, 199, 9999	1	99	128	
	196 Ver.UP	ABC2 terminal function selection		1	9999	128	
Multi-speed setting	232 to 239	Multi-speed setting (8 speed to 15 speed)	0 to 400Hz, 9999	0.01Hz	9999	93	
—	240	Soft-PWM operation selection	0, 1	1	1	169	
—	241	Analog input display unit switchover	0, 1	1	0	177	

Function	Parameters	Name	Setting Range	Minimum Setting Increments	Initial Value	Refer to Page	Customer Setting
—	242	Terminal 1 added compensation amount (terminal 2)	0 to 100%	0.1%	100%	175	
—	243	Terminal 1 added compensation amount (terminal 4)	0 to 100%	0.1%	75%	175	
—	244	Cooling fan operation selection	0, 1	1	1	300	
Slip compensation	245	Rated slip	0 to 50%, 9999	0.01%	9999	80	
	246	Slip compensation time constant	0.01 to 10s	0.01s	0.5s	80	
	247	Constant-power range slip compensation selection	0, 9999	1	9999	80	
—	250	Stop selection	0 to 100s, 1000 to 1100s, 8888, 9999	0.1s	9999	119	
—	251	Output phase loss protection selection	0, 1	1	1	162	
Frequency compensation function	252	Override bias	0 to 200%	0.1%	50%	175	
	253	Override gain	0 to 200%	0.1%	150%	175	
Life check	255	Life alarm status display	(0 to 15)	1	0	301	
	256	Inrush current limit circuit life display	(0 to 100%)	1%	100%	301	
	257	Control circuit capacitor life display	(0 to 100%)	1%	100%	301	
	258	Main circuit capacitor life display	(0 to 100%)	1%	100%	301	
	259	Main circuit capacitor life measuring	0, 1	1	0	301	
—	260	PWM frequency automatic switchover	0, 1	1	1	169	
Power failure stop	261 Ver. UP	Power failure stop selection	0, 1, 2, 21, 22	1	0	156	
	262	Subtracted frequency at deceleration start	0 to 20Hz	0.01Hz	3Hz	156	
	263	Subtraction starting frequency	0 to 400Hz, 9999	0.01Hz	60Hz	156	
	264	Power-failure deceleration time 1	0 to 3600/ 360s	0.1/0.01s	5s	156	
	265	Power-failure deceleration time 2	0 to 3600/ 360s, 9999	0.1/0.01s	9999	156	
	266	Power failure deceleration time switchover frequency	0 to 400Hz	0.01Hz	60Hz	156	
—	267	Terminal 4 input selection	0, 1, 2	1	0	171	
—	268	Monitor decimal digits selection	0, 1, 9999	1	9999	141	
—	269	Parameter for manufacturer setting. Do not set.					
Password function	296 Ver. UP	Password lock level	0 to 6, 99, 101 to 106, 199, 9999	1	9999	192	
	297 Ver. UP	Password lock/unlock	(0 to 5), 1000 to 9998, 9999	1	9999	192	
—	299	Rotation direction detection selection at restarting	0, 1, 9999	1	9999	152	

Function	Parameters	Name	Setting Range	Minimum Setting Increments	Initial Value	Refer to Page	Customer Setting
RS-485 communication	331 Ver.UP	RS-485 communication station number	0 to 31 (0 to 127, 0 to 247)	1	0	214	
	332 Ver.UP	RS-485 communication speed	3, 6, 12, 24, 48, 96, 192, 384 (96, 192, 384, 768)	1	96	214	
	333	RS-485 communication stop bit length	0, 1, 10, 11	1	1	214	
	334	RS-485 communication parity check selection	0, 1, 2	1	2	214	
	335	RS-485 communication retry count	0 to 10, 9999	1	1	214	
	336	RS-485 communication check time interval	0 to 999.8s, 9999	0.1s	0s	214	
	337	RS-485 communication waiting time setting	0 to 150ms, 9999	1	9999	214	
	338	Communication operation command source	0, 1	1	0	204	
	339	Communication speed command source	0, 1, 2	1	0	204	
	340	Communication startup mode selection	0, 1, 2, 10, 12	1	0	203	
	341	RS-485 communication CR/LF selection	0, 1, 2	1	1	214	
	342	Communication EEPROM write selection	0, 1	1	0	216	
	343	Communication error count	—	1	0	232	
—	390 Ver.UP	% setting reference frequency	1 to 400Hz	0.01Hz	60Hz	247	
PLC function	414 Ver.UP	PLC function operation selection	0, 1	1	0	260	
	415 Ver.UP	Inverter operation lock mode setting	0, 1	1	0	260	
Remote output	495 Ver.UP	Remote output selection	0, 1, 10, 11	1	0	137	
	496	Remote output data 1	0 to 4095	1	0	137	
	497	Remote output data 2	0 to 4095	1	0	137	
—	498 Ver.UP	PLC function flash memory clear	0 to 9999	1	0	260	
—	502 Ver.UP	Stop mode selection at communication error	0 to 3	1	0	216	
Maintenance	503	Maintenance timer	0 (1 to 9998)	1	0	304	
	504	Maintenance timer alarm output set time	0 to 9998, 9999	1	9999	304	
—	505 Ver.UP	Speed setting reference	1 to 120Hz	0.01Hz	60Hz	139	
PLC function	506 to 515 Ver.UP	Parameter 1 to 10 for user	0 to 65535	1	0	260	
—	522 Ver.UP	Output stop frequency	0 to 400Hz, 9999	0.01Hz	9999	120	
—	539	Modbus-RTU communication check time interval	0 to 999.8s, 9999	0.1s	9999	232	

Function	Parameters	Name	Setting Range	Minimum Setting Increments	Initial Value	Refer to Page	Customer Setting
Communication	549 Ver.UP	Protocol selection	0, 1, 2	1	1	232	
	550	NET mode operation command source selection	0, 1, 9999	1	9999	204	
	551	PU mode operation command source selection	1, 2	1	2	204	
PID control	553 Ver.UP	PID deviation limit	0 to 100.0%, 9999	0.1%	9999	261	
	554 Ver.UP	PID signal operation selection	0 to 3, 10 to 13	1	0	261, 283	
Current average monitor	555	Current average time	0.1 to 1.0s	0.1s	1s	305	
	556	Data output mask time	0.0 to 20.0s	0.1s	0s	305	
	557	Current average value monitor signal output reference current	0 to 500A/0 to 3600A *2	0.01/0.1A *2	Rated inverter current	305	
—	563	Energization time carrying-over times	(0 to 65535)	1	0	141	
—	564	Operating time carrying-over times	(0 to 65535)	1	0	141	
Multiple rating	570	Multiple rating setting	0, 1	1	0	86	
—	571	Holding time at a start	0.0 to 10.0s, 9999	0.1s	9999	104	
—	573 Ver.UP	4mA input check selection	1, 2, 3, 4, 9999	1	9999	182	
PID control	575	Output interruption detection time	0 to 3600s, 9999	0.1s	1s	261, 283	
	576	Output interruption detection level	0 to 400Hz	0.01Hz	0Hz	261, 283	
	577	Output interruption cancel level	900 to 1100%	0.1%	1000%	261, 283	
Pump function	578	Auxiliary motor operation selection	0 to 3	1	0	283	
	579	Motor connection function selection	0 to 3	1	0	283	
	580	MC switching interlock time	0 to 100s	0.1s	1s	283	
	581	Start waiting time	0 to 100s	0.1s	1s	283	
	582	Auxiliary motor connection-time deceleration time	0 to 3600/360s, 9999	0.1/0.01s	1s	283	
	583	Auxiliary motor disconnection-time acceleration time	0 to 3600/360s, 9999	0.1/0.01s	1s	283	
	584	Auxiliary motor 1 starting frequency	0 to 400Hz	0.01Hz	60Hz	283	
	585	Auxiliary motor 2 starting frequency	0 to 400Hz	0.01Hz	60Hz	283	
	586	Auxiliary motor 3 starting frequency	0 to 400Hz	0.01Hz	60Hz	283	
	587	Auxiliary motor 1 stopping frequency	0 to 400Hz	0.01Hz	0Hz	283	
	588	Auxiliary motor 2 stopping frequency	0 to 400Hz	0.01Hz	0Hz	283	
	589	Auxiliary motor 3 stopping frequency	0 to 400Hz	0.01Hz	0Hz	283	
	590	Auxiliary motor start detection time	0 to 3600s	0.1s	5s	283	
	591	Auxiliary motor stop detection time	0 to 3600s	0.1s	5s	283	
—	611	Acceleration time at a restart	0 to 3600s, 9999	0.1s	5/15s *2	152	
Speed smoothing control	653 Ver.UP	Speed smoothing control	0 to 200%	0.1%	0	170	
	654 Ver.UP	Speed smoothing cutoff frequency	0 to 120Hz	0.01Hz	20Hz	170	
—	665 Ver.UP	Regeneration avoidance frequency gain	0 to 200%	0.1%	100%	298	

Function	Parameters	Name	Setting Range	Minimum Setting Increments	Initial Value	Refer to Page	Customer Setting
BACnet MS/TP protocol	726 Ver.UP	Auto Baudrate/Max Master	0 to 255	1	255	247	
	727 Ver.UP	Max Info Frames	1 to 255	1	1	247	
	728 Ver.UP	Device instance number (Upper 3 digit)	0 to 419 (0 to 418)	1	0	247	
	729 Ver.UP	Device instance number (Lower 4 digit)	0 to 9999 (0 to 4302)	1	0	247	
PID control	753 Ver.UP	Second PID action selection	10, 11, 20, 21, 50, 51, 60, 61, 70, 71, 80, 81, 90, 91, 100, 101, 110, 111, 120, 121, 9999	1	9999	281	
	754 Ver.UP	Second PID control automatic switchover frequency	0 to 400Hz, 9999	0.01Hz	9999	281	
	755 Ver.UP	Second PID action set point	0 to 100%, 9999	0.01%	9999	281	
	756 Ver.UP	Second PID proportional band	0.1 to 1000%, 9999	0.1%	100%	281	
	757 Ver.UP	Second PID integral time	0.1 to 3600s, 9999	0.1s	1s	281	
	758 Ver.UP	Second PID differential time	0.01 to 10.00s, 9999	0.01s	9999	281	
	759 Ver.UP	PID unit selection	0 to 43, 9999	1	9999	320	
	760 Ver.UP	Pre-charge fault selection	0, 1	1	0	275	
	761 Ver.UP	Pre-charge ending level	0 to 100%, 9999	0.1%	9999	275	
	762 Ver.UP	Pre-charge ending time	0 to 3600s, 9999	0.1s	9999	275	
	763 Ver.UP	Pre-charge upper detection level	0 to 100%, 9999	0.1%	9999	275	
	764 Ver.UP	Pre-charge time limit	0 to 3600s, 9999	0.1s	9999	275	
	765 Ver.UP	Second pre-charge fault selection	0, 1	1	0	275, 281	
	766 Ver.UP	Second pre-charge ending level	0 to 100%, 9999	0.1%	9999	275, 281	
	767 Ver.UP	Second pre-charge ending time	0 to 3600s, 9999	0.1s	9999	275, 281	
	768 Ver.UP	Second pre-charge upper detection level	0 to 100%, 9999	0.1%	9999	275, 281	
	769 Ver.UP	Second pre-charge time limit	0 to 3600s, 9999	0.1s	9999	275, 281	
PU	774 Ver.UP	PU/DU monitor selection 1	1 to 3, 5, 6, 8 to 14, 17, 20, 23 to 25, 40 to 42, 50 to 57, 67, 81 to 86, 100, 9999	1	9999	322	
	775 Ver.UP	PU/DU monitor selection 2				322	
	776 Ver.UP	PU/DU monitor selection 3				322	

Function	Parameters	Name	Setting Range	Minimum Setting Increments	Initial Value	Refer to Page	Customer Setting
—	777 Ver.UP	4mA input fault operation frequency	0 to 400Hz, 9999	0.01Hz	9999	182	
	778 Ver.UP	Current input check filter	0 to 10s	0.01s	0	182	
—	779 Ver.UP	Operation frequency during communication error	0 to 400Hz, 9999	0.01Hz	9999	216	
—	799 Ver.UP	Pulse increment setting for output power	0.1kWh, 1kWh, 10kWh, 100kWh, 1000kWh	0.1	1kWh	138	
PLC function	826 to 865 Ver.UP	Parameter 11 to 50 for user	0 to 65535	1	0	260	
—	867	AM output filter	0 to 5s	0.01s	0.01s	147	
—	869	Current output filter	0 to 5s	0.01s	0.02s	147	
—	870 Ver.UP	Speed detection hysteresis	0 to 5Hz	0.01Hz	0Hz	133	
—	872	Input phase loss protection selection	0, 1	1	0	162	
Regeneration avoidance function	882	Regeneration avoidance operation selection	0, 1, 2	1	0	298	
	883	Regeneration avoidance operation level	300 to 800V	0.1V	380V/ 760VDC*5	298	
	884	Regeneration avoidance at deceleration detection sensitivity	0 to 5	1	0	298	
	885 Ver.UP	Regeneration avoidance compensation frequency limit value	0 to 30Hz, 9999	0.01Hz	6Hz	298	
	886	Regeneration avoidance voltage gain	0 to 200%	0.1%	100%	298	
Free parameter	888	Free parameter 1	0 to 9999	1	9999	307	
	889	Free parameter 2	0 to 9999	1	9999	307	
Energy saving monitor	891	Cumulative power monitor digit shifted times	0 to 4, 9999	1	9999	164	
	892	Load factor	30 to 150%	0.1%	100%	164	
	893	Energy saving monitor reference (motor capacity)	0.1 to 55kW/ 0 to 3600kW *2	0.01/0.1kW *2	SLD/LD value of Applied motor Capacity	164	
	894	Control selection during commercial power-supply operation	0, 1, 2, 3	1	0	164	
	895	Power saving rate reference value	0, 1, 9999	1	9999	164	
	896	Power unit cost	0 to 500, 9999	0.01	9999	164	
	897	Power saving monitor average time	0, 1 to 1000h, 9999	1h	9999	164	
	898	Power saving cumulative monitor clear	0, 1, 10, 9999	1	9999	164	
	899	Operation time rate (estimated value)	0 to 100%, 9999	0.1%	9999	164	

Function	Parameters	Name	Setting Range	Minimum Setting Increments	Initial Value	Refer to Page	Customer Setting
Calibration parameters	C0 (900) *6	CA terminal calibration	—	—	—	149	
	C1 (901) *6	AM terminal calibration	—	—	—	149	
	C2 (902) *6	Terminal 2 frequency setting bias frequency	0 to 400Hz	0.01Hz	0Hz	177	
	C3 (902) *6	Terminal 2 frequency setting bias	0 to 300%	0.1%	0%	177	
	125 (903) *6	Terminal 2 frequency setting gain frequency	0 to 400Hz	0.01Hz	60Hz	177	
	C4 (903) *6	Terminal 2 frequency setting gain	0 to 300%	0.1%	100%	177	
	C5 (904) *6	Terminal 4 frequency setting bias frequency	0 to 400Hz	0.01Hz	0Hz	177	
	C6 (904) *6	Terminal 4 frequency setting bias	0 to 300%	0.1%	20%	177	
	126 (905) *6	Terminal 4 frequency setting gain frequency	0 to 400Hz	0.01Hz	60Hz	177	
	C7 (905) *6	Terminal 4 frequency setting gain	0 to 300%	0.1%	100%	177	
Analog output current calibration	C8 (930) *6	Current output bias signal	0 to 100%	0.1%	0%	149	
	C9 (930) *6	Current output bias current	0 to 100%	0.1%	0%	149	
	C10 (931) *6	Current output gain signal	0 to 100%	0.1%	100%	149	
	C11 (931) *6	Current output gain current	0 to 100%	0.1%	100%	149	
PID control	◎ C42 (934) *6 Ver.UP	PID display bias coefficient	0 to 500.00, 9999	0.01	9999	261	
	◎ C43 (934) *6 Ver.UP	PID display bias analog value	0 to 300.0%	0.1%	20%	261	
	◎ C44 (935) *6 Ver.UP	PID display gain coefficient	0 to 500.00, 9999	0.01	9999	261	
	◎ C45 (935) *6 Ver.UP	PID display gain analog value	0 to 300.0%	0.1%	100%	261	
—	989	Parameter copy alarm release	10/100	1	10/100	325	
PU	990	PU buzzer control	0, 1	1	1	317	
	991	PU contrast adjustment	0 to 63	1	58	317	
—	997 Ver.UP	Fault initiation	16 to 18, 32 to 34, 48, 49, 64, 80 to 82, 96, 112, 128, 129, 144, 145, 160, 161, 162, 164 to 168, 176 to 179, 192 to 194, 196 to 199, 228, 229, 230, 241, 242, 245 to 247, 253, 9999	1	9999	308	
—	◎ 999 Ver.UP	Automatic parameter setting	1, 2, 10, 11, 20, 21, 30, 31, 9999	1	9999	309	

Function	Parameters	Name	Setting Range	Minimum Setting Increments	Initial Value	Refer to Page	Customer Setting
Clear parameter	Pr.CL	Parameter clear	0, 1	1	0	323	
	ALLC	All parameter clear	0, 1	1	0	324	
	Er.CL	Faults history clear	0, 1	1	0	328	
—	PCPY	Parameter copy	0, 1, 2, 3	1	0	325	
—	Pr.CH Ver.UP	Initial value change list	—	—	—	327	
—	AUTO Ver.UP	Automatic parameter setting	—	—	—	309	

*1 Differ according to capacities.
6%: FR-F720-00046, FR-F740-00023
4%: FR-F720-00077 to 00167, FR-F740-00038 to 00083
3%: FR-F720-00250 and 00340, FR-F740-00126 and 00170
2%: FR-F720-00490 to 01540, FR-F740-00250 to 00770
1.5%: FR-F720-01870 and 02330, FR-F740-00930 and 01160
1%: FR-F720-03160 or more, FR-F740-01800 or more

*2 Differ according to capacities.
FR-F720-02330 or less / FR-F720-03160 or more
FR-F740-01160 or less / FR-F740-01800 or more

*3 Differ according to capacities.
FR-F720-00340 or less / FR-F720-00490 or more
FR-F740-00170 or less / FR-F740-00250 or more

*4 Differ according to capacities.
4%: FR-F720-00340 or less, FR-F740-00170 or less
2%: FR-F720-00490 to 02330, FR-F740-00250 to 01160
1%: FR-F720-03160 or more, FR-F740-01800 or more

*5 Differs according to the voltage class. (200V class/400V class).

*6 The parameter number in parentheses is the one for use with the parameter unit (FR-PU04/FR-PU07).

4.3 Adjustment of the output torque (current) of the motor 78

4.3.1 Manual torque boost (Pr. 0, Pr. 46) ... 78
4.3.2 Simple magnetic flux vector control (Pr.80, Pr.90) ... 79
4.3.3 Slip compensation (Pr. 245 to Pr. 247) ... 80
4.3.4 Stall prevention operation (Pr. 22, Pr. 23, Pr. 48, Pr. 49, Pr. 66, Pr. 148, Pr. 149, Pr. 154, Pr. 156, Pr. 157) ... 81
4.3.5 Multiple rating (Pr. 570) ... 86

4.4 Limiting the output frequency 87

4.4.1 Maximum/minimum frequency (Pr. 1, Pr. 2, Pr. 18) ... 87
4.4.2 Avoiding mechanical resonance points (Frequency jump) (Pr. 31 to Pr. 36) ... 88

4.5 V/F pattern 89

4.5.1 Base frequency, voltage (Pr. 3, Pr. 19, Pr. 47) ... 89
4.5.2 Load pattern selection (Pr. 14) ... 91
4.5.3 Adjustable 5 points V/F (Pr. 71, Pr. 100 to Pr. 109) ... 92

4.6 Frequency setting by external terminals 93

4.6.1 Multi-speed setting operation (Pr. 4 to Pr. 6, Pr. 24 to Pr. 27, Pr. 232 to Pr. 239) ... 93
4.6.2 Jog operation (Pr. 15, Pr. 16) ... 95
4.6.3 Input compensation of multi-speed and remote setting (Pr. 28) ... 97
4.6.4 Remote setting function (Pr. 59) ... 98

4.7 Setting of acceleration/deceleration time and acceleration/deceleration pattern 101

4.7.1 Setting of the acceleration and deceleration time (Pr. 7, Pr. 8, Pr. 20, Pr. 21, Pr. 44, Pr. 45, Pr. 147) ... 101
4.7.2 Starting frequency and start-time hold function (Pr. 13, Pr. 571) ... 104
4.7.3 Acceleration/deceleration pattern (Pr. 29, Pr. 140 to Pr. 143) ... 105

4.8 Selection and protection of a motor 107

4.8.1 Motor protection from overheat (Electronic thermal relay function) (Pr. 9, Pr. 51) ... 107
4.8.2 Applied motor (Pr. 71) ... 111

4.9 Motor brake and stop operation 112

4.9.1 DC injection brake (Pr. 10 to Pr. 12) ... 112
4.9.2 Selection of a regenerative brake and DC feeding (Pr. 30, Pr. 70) ... 114
4.9.3 Stop selection (Pr. 250) ... 119
4.9.4 Output stop function (Pr. 522) ... 120

4.10 Function assignment of external terminal and control 122

4.10.1 Input terminal function selection (Pr. 178 to Pr. 189) ... 122
4.10.2 Inverter output shutoff signal (MRS signal, Pr. 17) ... 124
4.10.3 Condition selection of function validity by the second function selection signal (RT) (RT signal, Pr. 155) ... 125
4.10.4 Start signal selection (STF, STR, STOP signal, Pr. 250) ... 126
4.10.5 Output terminal function selection (Pr. 190 to Pr. 196) ... 128
4.10.6 Detection of output frequency (SU, FU, FU2 signal, Pr. 41 to Pr. 43, Pr. 50, Pr. 870) ... 133
4.10.7 Output current detection function (Y12 signal, Y13 signal, Pr. 150 to Pr. 153, Pr. 166, Pr. 167) ... 135
4.10.8 Remote output function (REM signal, Pr. 495 to Pr. 497) ... 137
4.10.9 Pulse train output of output power (Y79 signal, Pr. 799) ... 138

4.11 Monitor display and monitor output signal 139

4.11.1 Speed display and speed setting (Pr. 37, Pr. 144, Pr. 505) ... 139
4.11.2 DU/PU monitor display selection (Pr. 52, Pr. 54, Pr. 158, Pr. 170, Pr. 171, Pr. 268, Pr. 563, Pr. 564, Pr. 891) ... 141
4.11.3 CA, AM terminal function selection (Pr.55, Pr.56, Pr.867, Pr.869) ... 147
4.11.4 Terminal CA, AM calibration (Calibration parameter C0 (Pr. 900), C1 (Pr. 901), C8 (Pr.930) to C11 (Pr. 931)) ... 149
4.11.5 How to calibrate the terminal CA when using the operation panel (FR-DU07) ... 151

4.12 Operation selection at power failure and instantaneous power failure 152

4.12.1 Automatic restart after instantaneous power failure / flying start (Pr. 57, Pr. 58, Pr. 162 to Pr. 165, Pr. 299, Pr. 611) ... 152
4.12.2 Power failure signal (Y67 signal) ... 155
4.12.3 Power failure-time deceleration-to-stop function (Pr. 261 to Pr. 266) ... 156

4.13 Operation setting at fault occurrence 159

4.13.1 Retry function (Pr. 65, Pr. 67 to Pr. 69) ... 159
4.13.2 Fault code output selection (Pr. 76) ... 161
4.13.3 Input/output phase loss protection selection (Pr. 251, Pr. 872) ... 162

4.14 Energy saving operation and energy saving monitor 163

4.14.1 Energy saving control and Optimum excitation control (Pr. 60) ... 163
4.14.2 Energy saving monitor (Pr. 891 to Pr. 899) ... 164

4.15 Motor noise, EMI measures, mechanical resonance 169

4.15.1 PWM carrier frequency and Soft-PWM control (Pr. 72, Pr. 240, Pr. 260) ... 169
4.15.2 Speed smoothing control (Pr. 653, Pr. 654) ... 170

4.16 Frequency setting by analog input (terminal 1, 2, 4) 171

4.16.1 Analog input selection (Pr. 73, Pr. 267) ... 171
4.16.2 Analog input compensation (Pr. 73, Pr. 242, Pr. 243, Pr. 252, Pr. 253) ... 175
4.16.3 Response level of analog input and noise elimination (Pr. 74) ... 176
4.16.4 Bias and gain of frequency setting voltage (current) (Pr. 125, Pr. 126, Pr. 241, C2(Pr. 902) to C7(Pr. 905)) ... 177
4.16.5 4mA input check of current input (Pr. 573, Pr. 777, Pr. 778) ... 182

4.17 Misoperation prevention and parameter setting restriction 186

4.17.1 Reset selection/disconnected PU detection/PU stop selection (Pr. 75) ... 186
4.17.2 Parameter write selection (Pr. 77) ... 189
4.17.3 Reverse rotation prevention selection (Pr. 78) ... 190
4.17.4 Display of applied parameters and user group function (Pr. 160, Pr. 172 to Pr. 174) ... 190
4.17.5 Password function (Pr. 296, Pr. 297) ... 192

4.18 Selection of operation mode and operation location 195

4.18.1 Operation mode selection (Pr. 79) ... 195
4.18.2 Operation mode at power ON (Pr. 79, Pr. 340) ... 203
4.18.3 Start command source and speed command source during communication operation (Pr. 338, Pr. 339, Pr. 550, Pr. 551) ... 204

4.19 Communication operation and setting 209

4.19.1 Wiring and configuration of PU connector ... 209
4.19.2 Wiring and arrangement of RS-485 terminals ... 211
4.19.3 Initial settings and specifications of RS-485 communication (Pr. 117 to Pr. 124, Pr. 331 to Pr. 337, Pr. 341, Pr. 549) ... 214
4.19.4 Communication EEPROM write selection (Pr. 342) ... 216
4.19.5 Operation selection at communication error (Pr.502, Pr.779) ... 216
4.19.6 Mitsubishi inverter protocol (computer link communication) ... 219
4.19.7 Modbus-RTU communication specifications (Pr. 331, Pr. 332, Pr. 334, Pr. 343, Pr. 502, Pr. 539, Pr. 549, Pr.779) ... 232
4.19.8 BACnet MS/TP protocol ... 247
4.19.9 Operation by PLC function (Pr. 414, Pr. 415, Pr. 498, Pr. 506 to Pr. 515, Pr. 826 to Pr. 865) ... 260

4.20 PID control 261

4.20.1 Outline of PID control (Pr. 127 to Pr. 134, Pr. 241, Pr. 553, Pr. 554, Pr. 575 to Pr. 577) ... 261
4.20.2 Bias and gain calibration for PID displayed values (Pr. 241, Pr. 759, C42(Pr. 934) to C45(Pr. 935)) ... 273
4.20.3 Pre-charge function (Pr.760 to Pr. 769) ... 275
4.20.4 Second PID function (Pr.753 to Pr. 758, Pr.765 to Pr.769) ... 281
4.20.5 Advanced PID function (pump function) (Pr. 554, Pr. 575 to Pr. 591) ... 283

4.21 Special operation and frequency control 293

4.21.1 Bypass-inverter switchover function (Pr. 57, Pr. 58, Pr. 135 to Pr. 139, Pr. 159) ... 293
4.21.2 Regeneration avoidance function (Pr. 665, Pr. 882 to Pr. 886) ... 298

4.22 Useful functions 300

4.22.1 Cooling fan operation selection (Pr. 244) ... 300
4.22.2 Display of the life of the inverter parts (Pr. 255 to Pr .259) ... 301
4.22.3 Maintenance timer alarm (Pr. 503, Pr. 504) ... 304
4.22.4 Current average value monitor signal (Pr. 555 to Pr. 557) ... 305
4.22.5 Free parameter (Pr. 888, Pr. 889) ... 307
4.22.6 Initiating a fault (Pr.997) ... 308

4.22.7 Setting multiple parameters as a batch (Pr.999) 309

4.23 Setting from the parameter unit, operation panel 315

4.23.1 PU display language selection (Pr. 145) 315
4.23.2 Setting dial potentiometer mode/key lock selection (Pr. 161) 315
4.23.3 Buzzer control (Pr. 990) 317
4.23.4 PU contrast adjustment (Pr. 991) 317

4.24 Setting of FR-PU07-01 318

4.24.1 PID display bias/gain setting menu 319
4.24.2 Unit selection for the PID parameter/PID monitored items (Pr. 759) 320
4.24.3 PID set point direct setting menu 321
4.24.4 3-line monitor selection (Pr. 774 to Pr.776) 322

4.25 Parameter clear 323

4.26 All parameter clear 324

4.27 Parameter copy and parameter verification 325

4.27.1 Parameter copy 325
4.27.2 Parameter verification 326

4.28 Initial value change list 327

4.29 Check and clear of the faults history 328

4.3 Adjustment of the output torque (current) of the motor

Purpose	Parameter that must be Set		Refer to Page
Set starting torque manually	**Manual torque boost**	**Pr. 0, Pr. 46**	78
Automatically control output current according to load	**Simple magnetic flux vector control**	**Pr. 71, Pr. 80, Pr. 90**	79
Compensate for motor slip to secure low-speed torque	**Slip compensation**	**Pr. 245 to Pr. 247**	80
Limit output current to prevent inverter trip	**Stall prevention operation**	**Pr. 22, Pr. 23, Pr. 66, Pr. 154, Pr. 156, Pr. 157**	81
Change the overload current rating specifications	**Multiple rating setting**	**Pr. 570**	86

4.3.1 Manual torque boost (Pr. 0, Pr. 46)

You can compensate for a voltage drop in the low-frequency range to improve motor torque reduction in the low-speed range.
●Motor torque in the low-frequency range can be adjusted to the load to increase the starting motor torque.
●The starting torque boost can be changed by switching terminals.

Parameter Number	Name	Initial Value 200V class (400V class)		Setting Range	Description
0	**Torque boost**	00046 (00023)	6%	0 to 30%	Set the output voltage at 0Hz as %.
		00077 to 00167 (00038 to 00083)	4%		
		00250, 00340 (00126, 00170)	3%		
		00490 to 01540 (00250 to 00770)	2%		
		01870,02330 (00930, 01160)	1.5%		
		03160 (01800) or more	1%		
46 *1	**Second torque boost**	9999		0 to 30%	Set the torque boost value when the RT signal is ON.
				9999	Without second torque boost

*1 They can be set when *Pr. 160 User group read selection* = "0". *(Refer to page 190.)*

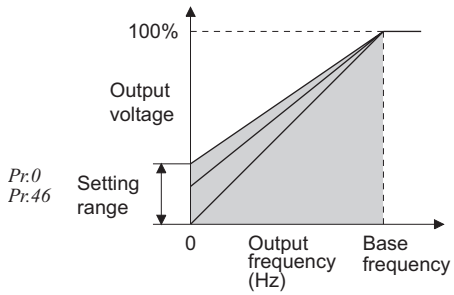

(1) Starting torque adjustment

· On the assumption that *Pr. 19 Base frequency voltage* is 100%, set the output voltage at 0Hz in % in *Pr. 0* (*Pr. 46*).
· Adjust the parameter little by little (about 0.5%), and check the motor status each time. If the setting is too large, the motor will overheat. The guideline is about 10% at the greatest.

(2) Set multiple torque boost (RT signal, *Pr. 46*)

· Use the second torque boost when changing the torque boost according to application or when using multiple motors by switching between them by one inverter.
· *Pr. 46 Second torque boost* is valid when the RT signal turns ON.

REMARKS

· The RT signal acts as the second function selection signal and makes the other second functions valid. *(Refer to page 124)*
· The RT signal is assigned to the RT terminal in the default setting. By setting "3" to any of *Pr. 178 to Pr. 189 (Input terminal function selection)*, you can assign the RT signal to the other terminal.

CAUTION

· Increase the setting when the distance between the inverter and motor is long or when motor torque is insufficient in the low-speed range. If the setting is too large, an overcurrent trip may occur.
· The *Pr. 0* and *Pr. 46* settings are valid only when V/F control is selected.
· When using the inverter dedicated motor (constant-torque motor) with the FR-F720-00250 or 00340 and FR-F740-00126 or 00170, set the torque boost value to 2%. If the initial set *Pr. 71* value is changed to the setting for use with a constant-torque motor, the *Pr. 0* setting changes to the corresponding value in above.
· Changing the terminal assignment using *Pr. 178 to Pr. 189 (input terminal function selection)* may affect the other functions. Please set parameters after confirming the function of each terminal.

♦ Parameters referred to ♦

Pr. 3 Base frequency, Pr. 19 Base frequency voltage ☞ *Refer to page 89*
Pr. 71 Applied motor ☞ *Refer to page 111*
Pr. 80 Motor capacity ☞ *Refer to page 79*
Pr. 178 to Pr. 189 (Input terminal function selection) ☞ *Refer to page 122*

4.3.2 Simple magnetic flux vector control (Pr.80, Pr.90)

Providing optimum excitation to the motor can also produce high torque in a low-speed range.
(Simple magnetic flux vector control)

Parameter Number	Name	Initial Value	Setting Range 200V class (400V class)		Description
80	Motor capacity	9999	02330 (01160) or less	0.4 to 55kW	Set the capacity of the motor used to select Simple magnetic flux vector control.
			03160 (01800) or more	0 to 3600kW	
			9999		V/F control is performed
90	Motor constant (R1)	9999	02330 (01160) or less	0 to 50Ω	Used to set the motor primary resistance value. (Normally setting is not necessary.)
			03160 (01800) or more	0 to 400mΩ	
			9999		Use the Mitsubishi motor (SF-JR, SF-HRCA) constants

The above parameters can be set when *Pr. 160 User group read selection* = "0". *(Refer to page 190)*

POINT

- The number of motor poles should be any of 2, 4 and 6 poles.
- Single-motor operation (One motor for one inverter)
- The wiring length from inverter to motor should be within 30m

(1) Automatically control optimum torque *(Pr.80)*

- When Simple magnetic flux vector control is not used, set "9999" (initial value) in *Pr.80*.
- Set the used motor capacity (equal to or one rank higher than the inverter capacity).

REMARKS

When using a constant-torque motor, set *Pr. 71 Applied motor* to "1" (constant-torque motor).

CAUTION

- When Simple magnetic flux vector control is selected, the rated motor frequency is set in *Pr. 3* and the rated motor voltage is set in *Pr. 19*. The base frequency voltage is handled as 200V class : 200V, 400V class : 400V when "9999" or "8888" is set in *Pr. 19* .
- Adjustable 5 points V/F, energy saving operation mode, Optimum excitation control function only under V/F control. They do not function for Simple magnetic flux vector control.

(2) Set the motor constant *(Pr.90)*

- Normally setting is not necessary. When you need more torque under Simple magnetic flux vector control for other manufacturer's motor, set the motor primary resistance value (R1) for 人connection. When the setting value is "9999" (initial value), the motor constant is based on the Mitsubishi motor constant (SF-JR, SF-HRCA).

♦ Parameters referred to ♦

Pr. 3 Base frequency, Pr. 19 Base frequency voltage ☞ *Refer to page 89*
Pr. 60 Energy saving control selection ☞ *Refer to page 163*
Pr. 71 Applied motor ☞ *Refer to page 111*
Pr. 77 Parameter write selection ☞ *Refer to page 189*

4.3.3 Slip compensation (Pr. 245 to Pr. 247)

The inverter output current may be used to assume motor slip to keep the motor speed constant.

Parameter Number	Name	Initial Value	Setting Range	Description
245	**Rated slip**	9999	0.01 to 50%	Used to set the rated motor slip.
			0, 9999	No slip compensation
246	**Slip compensation time constant**	0.5s	0.01 to 10s	Used to set the slip compensation response time. When the value is made smaller, response will be faster. However, as load inertia is greater, a regenerative overvoltage (E.OV□) fault is more liable to occur.
247	**Constant-power range slip compensation selection**	9999	0	Slip compensation is not made in the constant power range (frequency range above the frequency set in *Pr. 3*)
			9999	Slip compensation is made in the constant power range.

The above parameters can be set when *Pr. 160 User group read selection* = "0". *(Refer to page 190)*

· Slip compensation is validated when the motor rated slip calculated by the following formula is set in *Pr. 245*. Slip compensation is not used when *Pr. 245* = "0" or "9999".

$$\textbf{Rated slip} = \frac{\textbf{Synchronous speed at base frequency - rated speed}}{\textbf{Synchronous speed at base frequency}} \times \textbf{100[\%]}$$

REMARKS

When performing slip compensation, the output frequency may become greater than the set frequency. Set the *Pr. 1 Maximum frequency* value a little higher than the set frequency.

♦ Parameters referred to ♦

Pr. 1 Maximum frequency ☞ *Refer to page 87*
Pr. 3 Base frequency ☞ *Refer to page 89*

4.3.4 Stall prevention operation (Pr. 22, Pr. 23, Pr. 48, Pr. 49, Pr. 66, Pr. 148, Pr. 149, Pr. 154, Pr. 156, Pr. 157)

This function monitors the output current and automatically changes the output frequency to prevent the inverter from coming to trip due to overcurrent, overvoltage, etc. It can also limit stall prevention and fast-response current limit operation during acceleration/deceleration, driving or regeneration.

- Stall prevention
  If the output current exceeds the stall prevention operation level, the output frequency of the inverter is automatically varied to reduce the output current.
  Also the second stall prevention function can restrict the output frequency range in which the stall prevention function is valid.
- Fast-response current limit
  If the current exceeds the limit value, the output of the inverter is shut off to prevent an overcurrent.

Parameter Number	Name	Initial Value	Setting Range	Description	
22 *1	Stall prevention operation level	110% *2	0	Stall prevention operation selection becomes invalid.	
			0.1 to 120% *2	Set the current value at which stall prevention operation will be started.	
			9999	Analog variable	
23	Stall prevention operation level compensation factor at double speed	9999	0 to 150% *2	The stall operation level can be reduced when operating at a high speed above the rated frequency.	
			9999	Constant according to *Pr. 22*	
48	Second stall prevention operation current	110% *2	0	Second stall prevention operation invalid	
			0.1 to 120% *2	The second stall prevention operation level can be set.	
49	Second stall prevention operation frequency	0Hz	0	Second stall prevention operation invalid	
			0.01 to 400Hz	Set the frequency at which stall prevention operation of *Pr. 48* is started.	
			9999	*Pr. 48* is valid when the RT signal is ON.	
66	Stall prevention operation reduction starting frequency	60Hz	0 to 400Hz	Set the frequency at which the stall operation level is started to reduce.	
148	Stall prevention level at 0V input	110% *2	0 to 120% *2	Stall prevention operation level can be changed by the analog signal input to terminal 1.	
149	Stall prevention level at 10V input	120% *2	0 to 120% *2		
154	Voltage reduction selection during stall prevention operation	1	0	With voltage reduction	You can select whether to use output voltage reduction during stall prevention operation or not.
			1	Without voltage reduction	
156	Stall prevention operation selection	0	0 to 31, 100, 101	You can select whether stall prevention operation and fast-response current limit operation will be performed or not.	
157	OL signal output timer	0s	0 to 25s	Set the output start time of the OL signal output when stall prevention is activated.	
			9999	Without the OL signal output	

The above parameters can be set when *Pr. 160 User group read selection* = "0". *(Refer to page 190)*

*1 This parameter allows its setting to be changed during operation in any operation mode even if "0" (initial value) is set in *Pr. 77 Parameter write selection*.

*2 When *Pr. 570 Multiple rating setting* = "1", performing inverter reset and all parameter clear changes the initial value and setting range. *(Refer to page 86)*

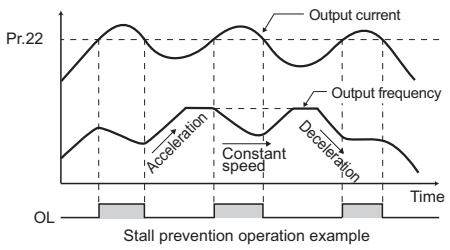

Stall prevention operation example

(1) Setting of stall prevention operation level *(Pr. 22)*

- Set in *Pr. 22* the ratio of the output current to the rated inverter current at which stall prevention operation will be performed. Normally set 110% (initial value).
- Stall prevention operation stops acceleration (makes deceleration) during acceleration, makes deceleration during constant speed, and stops deceleration during deceleration.
- When stall prevention operation is performed, the OL signal is output.

CAUTION

- If an overload status lasts long, an inverter trip (e.g. electronic thermal relay function (E.THM)) may occur.
- When *Pr. 156* has been set to activate the fast-response current limit (initial setting), the *Pr. 22* setting should not be higher than 140%. The torque will not be developed by doing so. (When *Pr. 570* = "1")

(2) Stall prevention operation signal output and output timing adjustment (OL signal, *Pr. 157*)

- When the output current exceeds the stall prevention operation level and stall prevention is activated, the stall prevention operation signal (OL signal) turns ON for longer than 100ms. When the output current falls to or below the stall prevention operation level, the output signal turns OFF.
- Use *Pr. 157 OL signal output timer* to set whether the OL signal is output immediately or after a preset period of time.
- This operation is also performed when the regeneration avoidance function oL (overvoltage stall) is executed.

Pr. 157 Setting	Description
0 (initial value)	Output immediately.
0.1 to 25	Output after the set time (s) has elapsed.
9999	Not output.

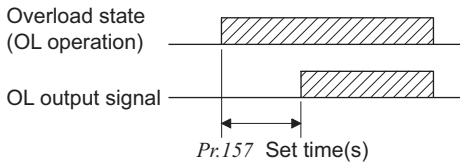

REMARKS

- The OL signal is assigned to the terminal OL in the initial setting. The OL signal can also be assigned to the other terminal by setting "3 (positive logic) or 103 (negative logic)" to any of *Pr. 190 to Pr. 196 (output terminal function selection)*.

CAUTION

- If the frequency has fallen to 0.5Hz by stall prevention operation and remains for 3s, a fault (E.OLT) appears to shutoff the inverter output.
- Changing the terminal assignment using *Pr. 190 to Pr. 196 (output terminal function selection)* may affect the other functions. Please set parameters after confirming the function of each terminal.

(3) Setting of stall prevention operation in high frequency range *(Pr. 22, Pr. 23, Pr. 66)*

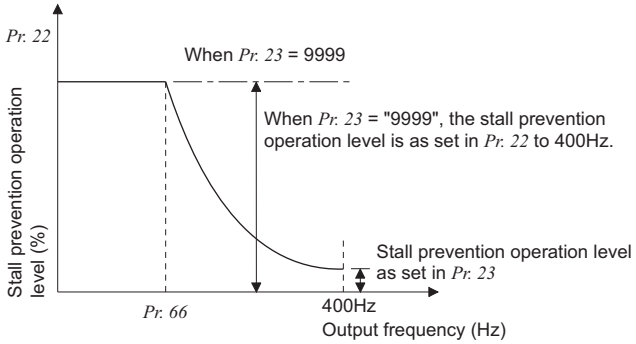

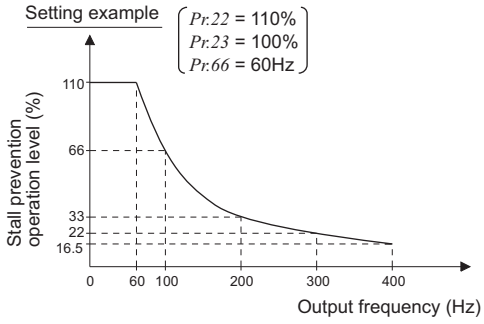

- During high-speed operation above the rated motor frequency, acceleration may not be made because the motor current does not increase. If operation is performed in a high frequency range, the current at motor lockup becomes smaller than the rated output current of the inverter, and the protective function (OL) is not executed if the motor is at a stop.
  To improve the operating characteristics of the motor in this case, the stall prevention level can be reduced in the high frequency range. This function is effective for performing operation up to the high-speed range on a centrifugal separator etc. Normally, set 60Hz in *Pr. 66* and 100% in *Pr. 23*.
- Formula for stall prevention operation level

$$\text{Stall prevention operation level in high frequency range (\%)} = A + B \times \left[\frac{Pr.\ 22 - A}{Pr.\ 22 - B}\right] \times \left[\frac{Pr.\ 23 - 100}{100}\right]$$

$$\text{However, } A = \frac{Pr.\ 66(\text{Hz}) \times Pr.\ 22(\%)}{\text{Output frequency (H)}},\quad B = \frac{Pr.\ 66(\text{Hz}) \times Pr.\ 22(\%)}{400\text{Hz}}$$

- When *Pr. 23 Stall prevention operation level compensation factor at double speed* = "9999" (initial value), the stall prevention operation level is kept constant at the *Pr. 22* setting up to 400Hz.

(4) Set multiple stall prevention operation levels *(Pr. 48, Pr. 49)*

- Setting "9999" in *Pr. 49 Second stall prevention operation frequency* and turning the RT signal ON make *Pr. 48 Second stall prevention operation current* valid.
- In *Pr. 48*, you can set the stall prevention operation level at the output frequency from 0Hz to that set in *Pr. 49*. During acceleration, however, the operation level is as set in *Pr. 22*.
- This function can also be used for stop-on-contact or similar operation by decreasing the *Pr. 48* setting to weaken the deceleration torque (stopping torque).

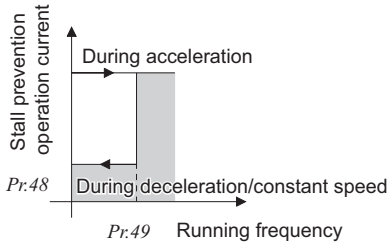

Pr. 49 Setting	Operation
0(initial value)	The second stall prevention operation is not performed.
0.01Hz to 400Hz	If the output frequency is equal to or less than the frequency set in *Pr. 49*, the second stall prevention function activates. (during constant speed or deceleration)*1
9999 *2	The second stall prevention function is performed according to the RT signal. RT signal ON ... Stall level *Pr. 48* RT signal OFF ... Stall level *Pr. 22*

*1 The smaller setting of the stall prevention operation levels set in *Pr. 22* and *Pr. 48* has a higher priority.

*2 When *Pr. 22* = "9999" (Stall prevention operation level analog input), the stall prevention operation level also switches from the analog input (terminal 1 input) to the stall prevention operation level of *Pr. 48* when the RT signal turns ON.
(The second stall prevention operation level cannot be input in an analog form.)

Set frequency exceeds *Pr. 49*

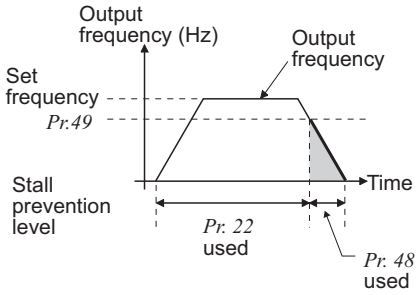

Set frequency is *Pr. 49* or less

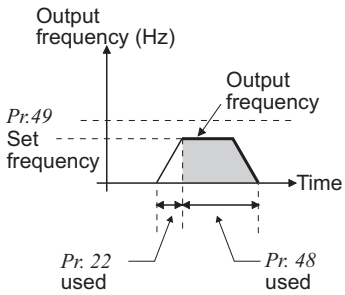

REMARKS

- When *Pr. 49* ≠ "9999" (level changed according to frequency) and *Pr. 48* = "0%", the stall prevention operation level is 0% at or higher than the frequency set in *Pr. 49*.
- In the initial setting, the RT signal is assigned to the RT terminal. By setting "3" to any of *Pr. 178 to Pr. 189 (input terminal function selection)*, you can assign the RT signal to the other terminal.

CAUTION

- Changing the terminal assignment using *Pr. 178 to Pr. 189 (input terminal function selection)* may affect the other functions. Please set parameters after confirming the function of each terminal.
- The RT signal acts as the second function selection signal and makes the other second functions valid. *(Refer to page 125)*

(5) Stall prevention operation level setting by terminal 1 (analog variable) *(Pr. 148, Pr. 149)*

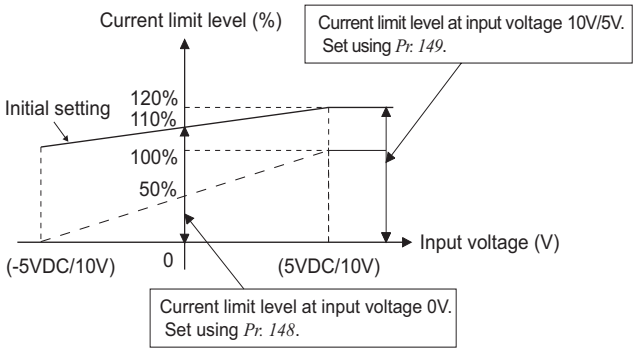

- Set *Pr. 22 Stall prevention operation level* to "9999". Input 0 to 5V (or 0 to 10V) to terminal 1. Select 5V or 10V using *Pr. 73 Analog input selection*. When *Pr. 73* = "1" (initial value), 0 to ±10V is input.
- Set the current limit level at the input voltage of 0V in *Pr. 148 Stall prevention level at 0V input.*
- Set the current limit level at the input voltage of 10V or 5V in *Pr. 149 Stall prevention level at 10V input*

REMARKS

- The fast-response current limit level cannot be set.
- When *Pr. 22* = 9999 (analog variable), functions other than the terminal 1 (auxiliary input, override function, PID control) are not executed.

(6) To further prevent a trip *(Pr. 154)*

- When *Pr. 154* is set to "0", the output voltage reduces during stall prevention operation. By making setting to reduce the output voltage, an overcurrent trip can further become difficult to occur.
- Use this function where a torque decrease will not pose a problem.

Pr. 154 Setting	Description
0	Output voltage reduced
1 (initial value)	Output voltage not reduced

(7) Limit the stall prevention operation and fast-response current limit operation according to the operating status *(Pr. 156)*

- Refer to the following table and select whether fast-response current limit operation will be performed or not and the operation to be performed at OL signal output.

Pr. 156 Setting		Fast-response Current Limit ○: Activated ●: Not activated	Stall Prevention Operation Selection ○:Activated ●:Not activated			OL Signal Output ○:Operation continued ●:Operation not continued *1
			Acceleration	Constant speed	Deceleration	
0 (initial value)		○	○	○	○	○
1		●	○	○	○	○
2		○	●	○	○	○
3		●	●	○	○	○
4		○	○	●	○	○
5		●	○	●	○	○
6		○	●	●	○	○
7		●	●	●	○	○
8		○	○	○	●	○
9		●	○	○	●	○
10		○	●	○	●	○
11		●	●	○	●	○
12		○	○	●	●	○
13		●	○	●	●	○
14		○	●	●	●	○
15		●	●	●	●	— *2
100 *3	Driving	○	○	○	○	○
	Regeneration	●	●	●	●	— *2

Pr. 156 Setting		Fast-response Current Limit ○:Activated ●: Not activated	Stall Prevention Operation Selection ○:Activated ●:Not activated			OL Signal Output ○:Operation continued ●:Operation not continued *1
			Acceleration	Constant speed	Deceleration	
16		○	○	○	○	●
17		●	○	○	○	●
18		○	●	○	○	●
19		●	●	○	○	●
20		○	○	●	○	●
21		●	○	●	○	●
22		○	●	●	○	●
23		●	●	●	○	●
24		○	○	○	○	●
25		●	○	○	●	●
26		○	●	○	●	●
27		●	●	○	●	●
28		○	○	●	●	●
29		●	○	●	●	●
30		○	●	●	●	●
31		●	●	●	●	— *2
101 *3	Driving	●	○	○	○	○
	Regeneration	●	●	●	●	— *2

*1 When "Operation not continued at signal output" is selected, the " E.OLT " fault code (stopped by stall prevention) is displayed and operation stopped.
*2 Since both fast-response current limit and stall prevention are not activated, OL signal and E.OLT are not output.
*3 The settings "100" and "101" allow operations to be performed in the driving and regeneration modes, respectively. The setting "101" disables the fast-response current limit in the driving mode.

CAUTION

- When the load is heavy, the elevator is predetermined, or the acceleration/deceleration time is short, stall prevention is activated and acceleration/deceleration may not be made according to the preset acceleration/deceleration time. Set *Pr. 156* and stall prevention operation level to the optimum values.
- In vertical lift applications, make setting so that the fast-response current limit is not activated. Torque may not be produced, causing a drop due to gravity.

⚠ CAUTION

⚠ Do not set a small value as the stall prevention operation current.
Otherwise, torque generated will reduce.

⚠ Always perform test operation.
Stall prevention operation during acceleration may increase the acceleration time.
Stall prevention operation performed during constant speed may cause sudden speed changes.
Stall prevention operation during deceleration may increase the deceleration time, increasing the deceleration distance.

♦ Parameters referred to ♦

- *Pr. 73 Analog input selection* ☞ *Refer to page 171*
- *Pr. 178 to Pr. 189 (Input terminal function selection)* ☞ *Refer to page 122*
- *Pr. 190 to Pr. 196 (output terminal function selection)* ☞ *Refer to page 128*
- *Pr. 570 Multiple rating setting* ☞ *Refer to page 86*

4.3.5 Multiple rating (Pr. 570)

You can use the inverter by changing the overload current rating specifications according to load applications. Note that the control rating of each function changes.

Parameter Number	Name	Initial Value	Setting Range	Description
570	Multiple rating setting	0	0	SLD Surrounding air temperature 40°C (104°F), Overload current rating 110% 60s, 120% 3s (Inverse time characteristics)
			1	LD Surrounding air temperature 50°C (122°F), Overload current rating 120% 60s, 150% 3s (Inverse time characteristics)

The above parameters can be set when *Pr. 160 User group read selection* = "0". *(Refer to page 190)*

- The initial value and setting range of the following parameters are changed by performing reset and all parameter clear after changing this parameter setting.
- Reflect the *Pr. 570* setting in the following procedure.
  1) Change the *Pr. 570* setting.
  2) Reset the inverter.
  3) Perform all parameter clear.

Parameter Number	Name		*Pr. 570* Setting		Refer to Page
			0 (initial value)	1	
9	Electronic thermal O/L relay	Initial Value	SLD rated current *1	LD rated current *1	107
22	Stall prevention operation level	Setting Range	0, 0.1 to 120%, 9999	0, 0.1 to 150%, 9999	81
		Initial Value	110%	120%	
23	Stall prevention operation level compensation factor at double speed	Setting Range	0 to 150%, 9999	0 to 200%, 9999	81
		Initial Value	9999	9999	
48	Second stall prevention operation current	Setting Range	0, 0.1 to 120%	0, 0.1 to 150%	81
		Initial Value	110%	120%	
56	Current monitoring reference	Initial Value	SLD rated current *1	LD rated current *1	147
148	Stall prevention level at 0V input	Setting Range	0 to 120%	0 to 150%	81
		Initial Value	110%	120%	
149	Stall prevention level at 10V input	Setting Range	0 to 120%	0 to 150%	81
		Initial Value	120%	150%	
150	Output current detection level	Setting Range	0 to 120%	0 to 150%	135
		Initial Value	110%	120%	
165	Stall prevention operation level for restart	Setting Range	0 to 120%	0 to 150%	152
		Initial Value	110%	120%	
557	Current average value monitor signal output reference current	Initial Value	SLD rated current *1	LD rated current *1	305
893	Energy saving monitor reference (motor capacity)	Initial Value	SLD value of applied motor capacity *2	LD value of applied motor capacity *2	164

*1 The rated current differs according to the inverter capacity. *Refer to rated specifications (page 370)*.
*2 For the FR-F720-02330(FR-F740-01160) or less, SLD/LD value of applied motor capacity is the same. *Refer to rated specifications (page 370)*.

CAUTION

When *Pr. 570* = "0" (initial value), *Pr.260 PWM frequency automatic switchover* becomes invalid. *(Refer to page 169.)*

4.4 Limiting the output frequency

Purpose	Parameter that must be Set		Refer to Page
Set upper limit and lower limit of output frequency	**Maximum/minimum frequency**	**Pr. 1, Pr. 2, Pr. 18**	87
Perform operation by avoiding mechanical resonance points	**Frequency jump**	**Pr. 31 to Pr. 36**	88

4.4.1 Maximum/minimum frequency (Pr. 1, Pr. 2, Pr. 18)

You can limit the motor speed. Clamp the upper and lower limits of the output frequency.

Parameter Number	Name	Initial Value 200V class (400V class)		Setting Range	Description
1	**Maximum frequency**	02330 (01160) or less	120Hz	0 to 120Hz	Set the upper limit of the output frequency.
		03160 (01800) or more	60Hz		
2	**Minimum frequency**	0Hz		0 to 120Hz	Set the lower limit of the output frequency.
18 *	**High speed maximum frequency**	02330 (01160) or less	120Hz	120 to 400Hz	Set when performing the operation at 120Hz or more.
		03160 (01800) or more	60Hz		

* The parameters can be set when *Pr. 160 User group read selection* = "0". *(Refer to page 190)*

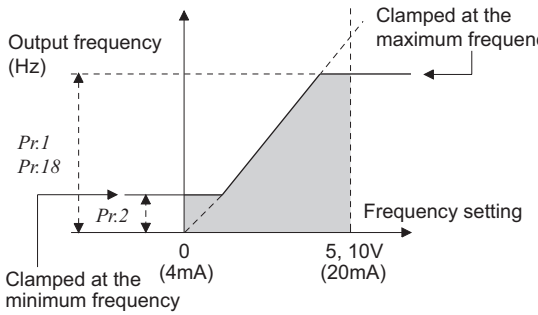

(1) Set maximum frequency

- Set the upper limit of the output frequency in *Pr. 1 Maximum frequency*. If the value of the frequency command entered is higher than the setting, the output frequency is clamped at the maximum frequency.
- When you want to perform operation above 120Hz, set the upper limit of the output frequency to *Pr. 18 High speed maximum frequency*. (When *Pr. 18* is set, *Pr. 1* automatically switches to the frequency of *Pr. 18*. When *Pr. 18* is set, *Pr. 18* automatically switches to the frequency of *Pr. 1*.)

REMARKS

- When performing operation above 60Hz using the frequency setting analog signal, change *Pr. 125 (Pr. 126) (frequency setting gain)*. If only *Pr. 1* or *Pr. 18* is changed, operation above 60Hz cannot be performed

(2) Set minimum frequency

- Use *Pr. 2 Minimum frequency* to set the lower limit of the output frequency.
- The output frequency is clamped by the *Pr. 2* setting even the set frequency is lower than the *Pr. 2* setting (The frequency will not decrease to the *Pr. 2* setting.)

REMARKS

- When *Pr. 15 Jog frequency* is equal to or less than *Pr. 2*, the *Pr. 15* setting has precedence over the *Pr. 2* setting.
- When stall prevention is activated to decrease the output frequency, the output frequency may drop to *Pr. 2* or below.

⚠ CAUTION

⚠ If the *Pr. 2* setting is higher than the *Pr. 13 Starting frequency* value, note that the motor will run at the set frequency according to the acceleration time setting by merely switching the start signal ON, without entry of the command frequency.

♦ Parameters referred to ♦

Pr. 13 Starting frequency ☞ *Refer to page 104*
Pr. 15 Jog frequency ☞ *Refer to page 95*
Pr. 125 Terminal 2 frequency setting gain frequency, Pr. 126 Terminal 4 frequency setting gain frequency ☞ *Refer to page 177*

4.4.2 Avoiding mechanical resonance points (Frequency jump) (Pr. 31 to Pr. 36)

When it is desired to avoid resonance attributable to the natural frequency of a mechanical system, these parameters allow resonant frequencies to be jumped.

Parameter Number	Name	Initial Value	Setting Range	Description
31	**Frequency jump 1A**	9999	0 to 400Hz, 9999	1A to 1B, 2A to 2B, 3A to 3B is frequency jumps 9999: Function invalid
32	**Frequency jump 1B**	9999	0 to 400Hz, 9999	
33	**Frequency jump 2A**	9999	0 to 400Hz, 9999	
34	**Frequency jump 2B**	9999	0 to 400Hz, 9999	
35	**Frequency jump 3A**	9999	0 to 400Hz, 9999	
36	**Frequency jump 3B**	9999	0 to 400Hz, 9999	

The above parameters can be set when *Pr. 160 User group read selection* = "0". *(Refer to page 190)*

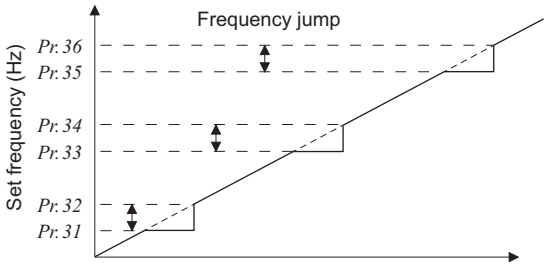

- Up to three areas may be set, with the jump frequencies set to either the top or bottom point of each area.
- The settings of frequency jumps 1A, 2A, 3A are jump points, and operation is performed at these frequencies in the jump areas.

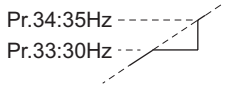

Example 1 To fix the frequency to 30Hz in the range 30Hz to 35Hz, set 35Hz in *Pr. 34* and 30Hz in *Pr. 33*.

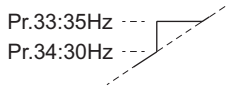

Example 2 To jump the frequency to 35Hz in the range 30Hz to 35Hz, set 35Hz in *Pr. 33* and 30Hz in *Pr. 34*.

CAUTION

- During acceleration/deceleration, the running frequency within the set area is valid.

4.5 V/F pattern

Purpose	Parameter that must be Set		Refer to Page
Set motor ratings	**Base frequency, base frequency voltage**	**Pr. 3, Pr. 19, Pr. 47**	89
Select a V/F pattern according to applications	**Load pattern selection**	**Pr. 14**	91
Use special motor	**Adjustable 5 points V/F**	**Pr. 71, Pr. 100 to Pr. 109**	92

4.5.1 Base frequency, voltage (Pr. 3, Pr. 19, Pr. 47)

Used to adjust the inverter outputs (voltage, frequency) to the motor rating.

Parameter Number	Name	Initial Value	Setting Range	Description
3	**Base frequency**	60Hz	0 to 400Hz	Set the frequency when the motor rated torque is generated. (50Hz/60Hz)
19 *	**Base frequency voltage**	9999	0 to 1000V	Set the base voltage.
			8888	95% of power supply voltage
			9999	Same as power supply voltage
47 *	**Second V/F (base frequency)**	9999	0 to 400Hz	Set the base frequency when the RT signal is ON.
			9999	Second V/F invalid

* The parameters can be set when *Pr. 160 User group read selection* = "0" *(Refer to page 190)*

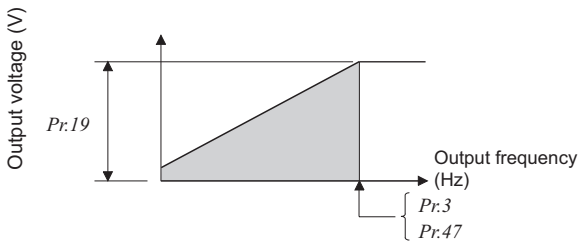

(1) Setting of base frequency *(Pr. 3)*

- When operating a standard motor, generally set the rated frequency of the motor to *Pr. 3 Base frequency*. When running the motor using bypass operation, set *Pr. 3* to the same value as the power supply frequency.
- If the frequency given on the motor rating plate is "50Hz" only, always set to "50Hz". Leaving the base frequency unchanged from "60Hz" may make the voltage too low and the torque insufficient. It may result in an inverter trip due to overload. Caution must be taken especially when *Pr. 14 Load pattern selection* = "1" (variable torque load).
- When using the Mitsubishi constant-torque motor, set *Pr. 3* to 60Hz.

(2) Set multiple base frequencies *(Pr. 47)*

- When you want to change the base frequency when switching two motors with one inverter, use the *Pr. 47 Second V/F (base frequency)*.
- *Pr. 47 Second V/F (base frequency)* is valid when the RT signal is ON.

REMARKS

- The RT signal acts as the second function selection signal and makes the other second functions valid. *(Refer to page 125)*
- In the initial setting, the RT signal is assigned to the RT terminal. By setting "3" to any of *Pr. 178 to Pr. 189 (Input terminal function selection)*, you can assign the RT signal to the other terminal.

(3) Base frequency voltage setting *(Pr. 19)*

- Use *Pr. 19 Base frequency voltage* to set the base voltage (e.g. rated motor voltage).
- If the setting is equal to or less than the power supply voltage, the maximum output voltage of the inverter is as set in *Pr. 19*.
- *Pr. 19* can be utilized in the following cases.
  - (a) When regeneration frequency is high (e.g. continuous regeneration)
    During regeneration, the output voltage becomes higher than the reference and may cause an overcurrent trip (E.OC☐) due to an increased motor current.
  - (b) When power supply voltage variation is large
    When the power supply voltage exceeds the rated voltage of the motor, speed variation or motor overheat may be caused by excessive torque or increased motor current.

CAUTION

- When *Pr. 71 Applied motor* is set to "2" (adjustable 5 points V/F characteristic), the *Pr. 47* setting becomes invalid. In addition, you cannot set "8888" or "9999" in *Pr. 19*.
- Changing the terminal assignment using *Pr. 178 to Pr. 189 (input terminal function selection)* may affect the other functions. Set parameters after confirming the function of each terminal.

♦ Parameters referred to ♦

Pr. 14 Load pattern selection ☞ *Refer to page 91*
Pr. 29 Acceleration/deceleration pattern selection ☞ *Refer to page 105*
Pr. 71 Applied motor ☞ *Refer to page 111*
Pr. 80 Motor capacity ☞ *Refer to page 79.*
Pr. 178 to Pr. 189 (input terminal function selection) ☞ *Refer to page 122.*

4.5.2 Load pattern selection (Pr. 14)

You can select the optimum output characteristic (V/F characteristic) for the application and load characteristics.

Parameter Number	Name	Initial Value	Setting Range	Description
14	Load pattern selection	1	0	For constant-torque load
			1	For variable-torque loads

The above parameters can be set when *Pr. 160 User group read selection* = "0". *(Refer to page 190)*

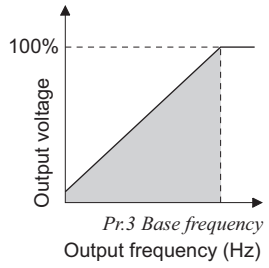

(1) For constant-torque load (setting "0")

- At or less than the base frequency voltage, the output voltage varies linearly with the output frequency.
- Set this value when driving the load whose load torque is constant if the speed varies, e.g. conveyor, cart or roll drive.

POINT

If the load is a fan or pump, select "For rated torque load (setting "0")" in any of the following cases.
- When a blower of large moment of inertia (J) is accelerated in a short time
- For constant-torque load such as rotary pump or gear pump
- When load torque increases at low speed, e.g. screw pump

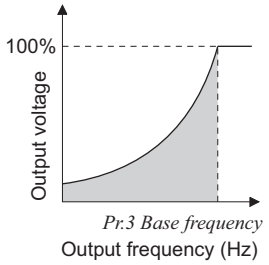

(2) For variable-torque load (setting "1", initial value)

- At or less than the base frequency voltage, the output voltage varies with the output frequency in a square curve.
- Set this value when driving the load whose load torque varies in proportion to the square of the speed, e.g. fan or pump.

♦ Parameters referred to ♦

Pr. 3 Base frequency ☞ *Refer to page 89*

4.5.3 Adjustable 5 points V/F (Pr. 71, Pr. 100 to Pr. 109)

A dedicated V/F pattern is available by freely setting the V/F characteristic between a startup and the base frequency and base voltage under V/F control (frequency voltage/frequency).
The torque pattern that is optimum for the machine's characteristic can be set.

Parameter Number	Name	Initial Value	Setting Range	Description
71	Applied motor	0	0, 1, 2, 20	Set "2" for adjustable 5 points V/F control.
100	V/F1(first frequency)	9999	0 to 400Hz, 9999	Set each points (frequency, voltage) of V/F pattern. 9999: No V/F setting
101	V/F1(first frequency voltage)	0V	0 to 1000V	
102	V/F2(second frequency)	9999	0 to 400Hz, 9999	
103	V/F2(second frequency voltage)	0V	0 to 1000V	
104	V/F3(third frequency)	9999	0 to 400Hz, 9999	
105	V/F3(third frequency voltage)	0V	0 to 1000V	
106	V/F4(fourth frequency)	9999	0 to 400Hz, 9999	
107	V/F4(fourth frequency voltage)	0V	0 to 1000V	
108	V/F5(fifth frequency)	9999	0 to 400Hz, 9999	
109	V/F5(fifth frequency voltage)	0V	0 to 1000V	

The above parameters can be set when *Pr. 160 User group read selection* = "0". *(Refer to page 190)*

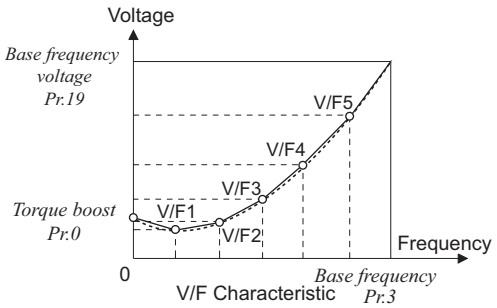

V/F Characteristic

- Any V/F characteristic can be provided by presetting the parameters of *V/F1 (first frequency voltage/first frequency) to V/F5*.
- For a machine of large static friction coefficient and small dynamic static friction coefficient, for example, set a V/F pattern that will increase the voltage only in a low-speed range since such a machine requires large torque at a start.

(Setting procedure)

1)Set the rated motor current in *Pr. 19 Base frequency voltage*. (No function at the setting of "9999" (initial value) or "8888".)
2)Set *Pr. 71 Applied motor* to "2" (Adjustable 5 points V/F characteristic).
3)Set the frequency and voltage you want to set in *Pr. 100 to Pr. 109*.

⚠ CAUTION

⚠ Make sure to set this parameter correctly according to the motor used.
Incorrect setting may cause the motor to overheat and burn.

CAUTION

- Adjustable 5 points V/F characteristics function only under V/F control or Optimum excitation control. They do not function for Simple magnetic flux vector control.
- When *Pr. 19 Base frequency voltage* = "8888" or "9999", *Pr. 71* cannot be set to "2". To set *Pr. 71* to "2", set the rated voltage value in *Pr. 19*.
- When the frequency values at each point are the same, a write disable error (Er1) appears.
- Set the points (frequencies, voltages) of *Pr. 100 to Pr. 109* within the ranges of *Pr. 3 Base frequency* and *Pr. 19 Base frequency voltage*.
- When "2" is set in *Pr. 71*, *Pr. 47 Second V/F (base frequency)* will not function.
- When *Pr. 71* is set to "2", the electronic thermal relay function makes calculation as a standard motor.

REMARKS

- A greater energy saving effect can be expected by combining *Pr. 60 Energy saving control selection* and adjustable 5 points V/F.
- For the FR-F720-00250 and 00340 and the FR-F740-00126 and 00170, the *Pr.0 Torque boost* and *Pr.12 DC injection brake operation voltage* settings are automatically changed according to the *Pr. 71* setting.

Pr. 71	Standard Motor Setting 0, 2, 20	Constant-torque Motor Setting 1
Pr. 0	3%	2%
Pr. 12	4%	2%

♦ Parameters referred to ♦

- *Pr. 3 Base frequency, Pr. 19 Base frequency voltage* ☞ *Refer to page 89*
- *Pr. 12 DC injection brake operation voltage* ☞ *Refer to page 112*
- *Pr. 47 Second V/F (base frequency)* ☞ *Refer to page 89*
- *Pr. 60 Energy saving control selection* ☞ *Refer to page 163*
- *Pr. 71 Applied motor* ☞ *Refer to page 111*
- *Pr. 80 Motor capacity, Pr. 90 Motor constant (R1)* ☞ *Refer to page 79*

4.6 Frequency setting by external terminals

Purpose	Parameter that must be Set		Refer to Page
Make frequency setting by combination of terminals	**Multi-speed operation**	**Pr. 4 to Pr. 6, Pr. 24 to Pr. 27, Pr. 232 to Pr. 239**	93
Perform Jog operation	**Jog operation**	**Pr. 15, Pr. 16**	95
Added compensation for multi-speed setting and remote setting	**Multi-speed input compensation selection**	**Pr. 28**	97
Infinitely variable speed setting by terminals	**Remote setting function**	**Pr. 59**	98

4.6.1 Multi-speed setting operation (Pr. 4 to Pr. 6, Pr. 24 to Pr. 27, Pr. 232 to Pr. 239)

Can be used to change the preset speed in the parameter with the contact terminals.
Any speed can be selected by merely turning ON-OFF the contact signals (RH, RM, RL, REX signals).

Parameter Number	Name	Initial Value	Setting Range	Description
4	**Multi-speed setting (high speed)**	60Hz	0 to 400Hz	Set the frequency when RH turns ON.
5	**Multi-speed setting (middle speed)**	30Hz	0 to 400Hz	Set the frequency when RM turns ON.
6	**Multi-speed setting (low speed)**	10Hz	0 to 400Hz	Set the frequency when RL turns ON.
24 *	**Multi-speed setting (speed 4)**	9999	0 to 400Hz, 9999	Frequency from speed 4 to speed 15 can be set according to the combination of the RH, RM, RL and REX signals. 9999: not selected
25 *	**Multi-speed setting (speed 5)**	9999	0 to 400Hz, 9999	
26 *	**Multi-speed setting (speed 6)**	9999	0 to 400Hz, 9999	
27 *	**Multi-speed setting (speed 7)**	9999	0 to 400Hz, 9999	
232 *	**Multi-speed setting (speed 8)**	9999	0 to 400Hz, 9999	
233 *	**Multi-speed setting (speed 9)**	9999	0 to 400Hz, 9999	
234 *	**Multi-speed setting (speed 10)**	9999	0 to 400Hz, 9999	
235 *	**Multi-speed setting (speed 11)**	9999	0 to 400Hz, 9999	
236 *	**Multi-speed setting (speed 12)**	9999	0 to 400Hz, 9999	
237 *	**Multi-speed setting (speed 13)**	9999	0 to 400Hz, 9999	
238 *	**Multi-speed setting (speed 14)**	9999	0 to 400Hz, 9999	
239 *	**Multi-speed setting (speed 15)**	9999	0 to 400Hz, 9999	

The above parameters allow its setting to be changed during operation in any operation mode even if "0" (initial value) is set in *Pr. 77 Parameter write selection*.
* The above parameters can be set when *Pr. 160 User group read selection* = "0". *(Refer to page 190)*

(1) Multi-speed setting *(Pr. 4 to Pr. 6)*

· Operation is performed at the frequency set in *Pr. 4* when the RH signal turns ON, *Pr. 5* when the RM signal turns ON, and *Pr. 6* when the RL signal turns ON.

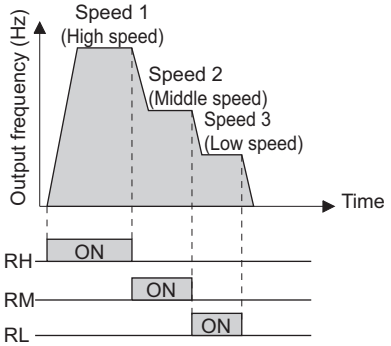

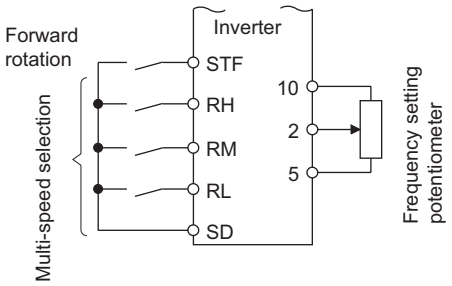

REMARKS

· In the initial setting, if two or three speeds are simultaneously selected, priority is given to the set frequency of the lower signal. For example, when the RH and RM signals turn ON, the RM signal *(Pr. 5)* has a higher priority.
· The RH, RM, RL signals are assigned to the terminal RH, RM, RL in the initial setting.
By setting "0 (RL)", "1 (RM)", "2 (RH)" in any of *Pr.178 to Pr.189 (input terminal function assignment)*, you can assign the signals to other terminals.

(2) Multi-speed setting higher than speed 4 *(Pr. 24 to Pr. 27, Pr. 232 to Pr. 239)*

- Frequency from speed 4 to speed 15 can be set according to the combination of the RH, RM, RL and REX signals. Set the running frequencies in *Pr. 24 to Pr. 27, Pr. 232 to Pr. 239*. (In the initial value setting, speed 4 to speed 15 are invalid.)
- For the terminal used for REX signal input, set "8" in any of *Pr. 178 to Pr. 186* to assign the function.

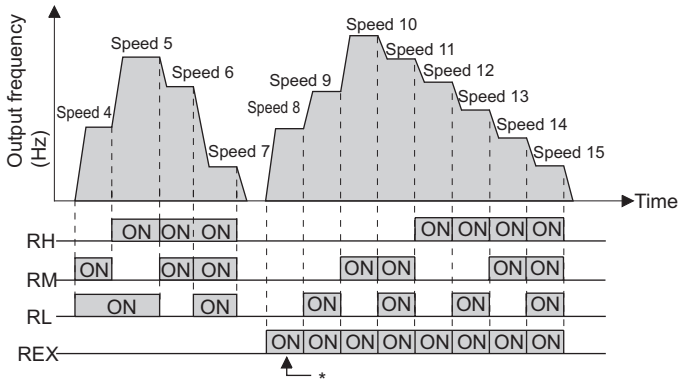

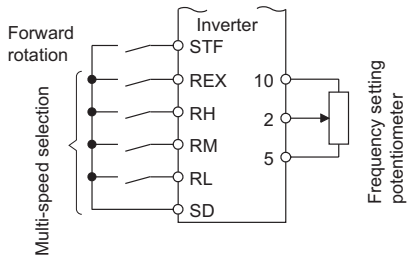

Multi-Speed Operation Connection Example

* When "9999" is set in *Pr. 232 Multi-speed setting (speed 8)*, operation is performed at frequency set in *Pr. 6* when RH, RM and RL are turned OFF and REX is turned ON.

REMARKS

- The priorities of the frequency commands by the external signals are "Jog operation > multi-speed operation > terminal 4 analog input > terminal 2 analog input". (*Refer to page 171* for the frequency command by analog input)
- Valid in External operation mode or PU/external combined operation mode (*Pr. 79* = "3" or "4").
- Multi-speed parameters can also be set in the PU or External operation mode.
- *Pr. 24 to Pr. 27* and *Pr. 232 to Pr. 239* settings have no priority between them.
- When a value other than "0" is set in *Pr. 59 Remote function selection*, the RH, RM and RL signals are used as the remote setting signals and the multi-speed setting becomes invalid.
- When making analog input compensation, set "1" in *Pr. 28 Multi-speed input compensation selection*.

CAUTION

- The RH, RM, RL, REX signals can be assigned to the input terminal using any of *Pr. 178 to Pr. 189 (input terminal function selection)*. Changing the terminal assignment using *Pr. 178 to Pr. 189 (input terminal function selection)* may affect the other functions. Set parameters after confirming the function of each terminal.

♦ Parameters referred to ♦

Pr. 1 Maximum frequency, Pr. 2 Minimum frequency ☞ *Refer to page 87*
Pr. 15 Jog frequency ☞ *Refer to page 95*
Pr. 28 Multi-speed input compensation selection ☞ *Refer to page 97*
Pr. 59 Remote function selection ☞ *Refer to page 98*
Pr. 178 to Pr. 189 (input terminal function selection) ☞ *Refer to page 122*

4.6.2 Jog operation (Pr. 15, Pr. 16)

You can set the frequency and acceleration/deceleration time for jog operation. Jog operation can be performed from either the outside or PU.
Can be used for conveyor positioning, test operation, etc.

Parameter Number	Name	Initial Value	Setting Range	Description
15	**Jog frequency**	5Hz	0 to 400Hz	Set the frequency for jog operation.
16	**Jog acceleration/ deceleration time**	0.5s	0 to 3600/360s*	Set the acceleration/deceleration time for jog operation. As the acceleration/deceleration time set the time taken to reach the frequency set in *Pr. 20 Acceleration/deceleration reference frequency*. (Initial value is 60Hz) The acceleration and deceleration times cannot be set separately.

The above parameters are displayed as simple mode parameters only when the parameter unit (FR-PU04/FR-PU07) is connected. When the operation panel (FR-DU07) is connected, the above parameters can be set only when *Pr. 160 User group read selection* = "0". *(Refer to page 190)*

* When the setting of *Pr. 21 Acceleration/deceleration time increments* is "0" (initial value), the setting range is "0 to 3600s" and the setting increments are "0.1s", and when the setting is "1", the setting range is "0 to 360s" and the setting increments are "0.01s"

(1) Jog operation from outside

· When the Jog signal is ON, a start and stop are available by the start signal (STF, STR). (The JOG signal is assigned to the terminal JOG in the initial setting)

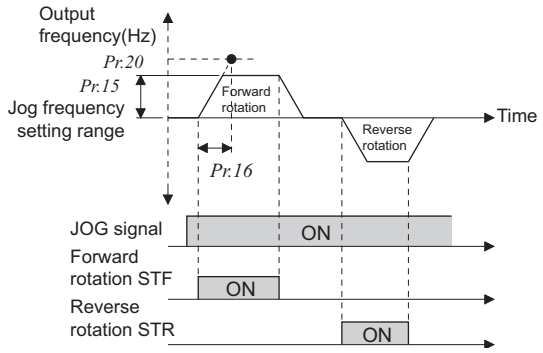

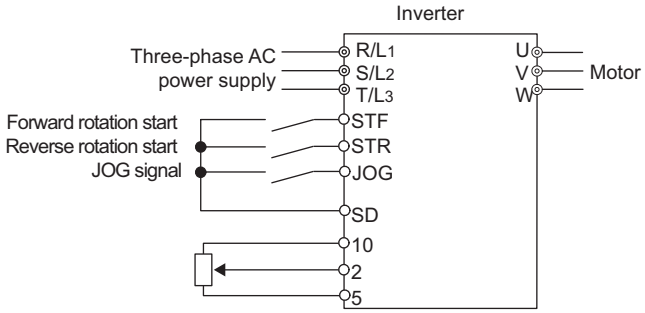

Connection diagram for external jog operation

Operation — **Indication**

1. Screen at powering ON
   - Confirm that the External operation mode is selected. ([EXT] lit)
     If not displayed, press (PU/EXT) to change to the external [EXT] operation mode.
     If the operation mode still does not change, set *Pr. 79* to change to the External operation mode.

2. Turn the JOG switch ON.

3. Turn the start switch (STF or STR) ON.
   - The motor rotates while start switch (STF or STR) is ON.
   - Rotates at 5Hz. (Initial value of *Pr. 15*)

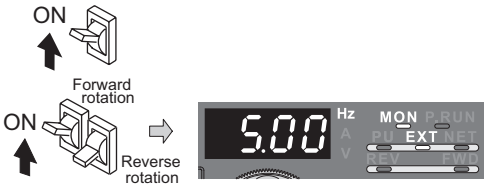

Rotates while ON

4. Turn the start switch (STF or STR) OFF.

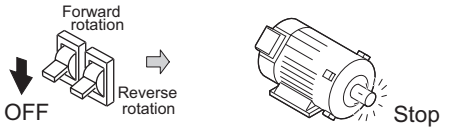

REMARKS

· When you want to change the running frequency, change *Pr. 15 Jog frequency* . (initial value "5Hz")
· When you want to change the running frequency, change *Pr. 16 Jog acceleration/deceleration time* . (initial value "0.5"s)

(2) Jog operation from PU

- Set the PU (FR-DU07/FR-PU04/FR-PU07) to the jog operation mode. Operation is performed only while the start button is pressed.

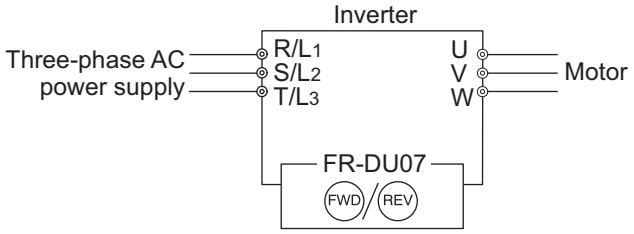

Operation — **Indication**

1. Confirmation of the RUN indication and operation mode indication
   - ●The monitor mode should have been selected.
   - ●The inverter should be at a stop.

2. Press PU/EXT to choose the PU JOG operation mode.

3. Press FWD (or REV).
   - ●While FWD (or REV) is pressed, the motor rotates.
   - ●Rotates at 5Hz. (initial value of Pr. 15)

Hold down.

4. Release FWD (or REV).

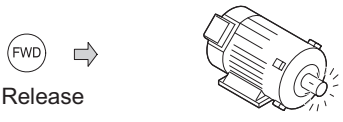

[When changing the frequency of PU JOG operation]

5. Press MODE to choose the parameter setting mode.

6. Turn ◎ until *Pr. 15 Jog frequency* appears.

7. Press SET to show the present set value. (5Hz)

8. Turn ◎ to set the value to "10.00". (10Hz)

9. Press SET to set.

Flicker · · · Parameter setting complete!!

10. Perform the operations in steps 1 to 4. The motor rotates at 10Hz.

CAUTION

- When *Pr. 29 Acceleration/deceleration pattern selection* = "1" (S-pattern acceleration/deceleration A), the acceleration/deceleration time is the period of time required to reach *Pr. 3 Base frequency*.
- The *Pr. 15* setting should be equal to or higher than the *Pr. 13 Starting frequency* setting.
- The JOG signal can be assigned to the input terminal using any of *Pr. 178 to Pr. 189 (input terminal function selection)*. Changing the terminal assignment using *Pr. 178 to Pr. 189 (input terminal function selection)* may affect the other functions. Set parameters after confirming the function of each terminal.
- During jog operation, the second acceleration/deceleration via the RT signal cannot be selected. (The other second functions are valid. *(Refer to page 124)*)
- When *Pr. 79 Operation mode selection* = "4", push FWD/REV of the PU (FR-DU07/FR-PU04/FR-PU07) to make a start or push STOP/RESET to make a stop.
- This function is invalid when *Pr. 79* = "3".

♦ Parameters referred to ♦

- *Pr. 13 Starting frequency* ☞ *Refer to page 104*
- *Pr. 29 Acceleration/deceleration pattern selection* ☞ *Refer to page 105*
- *Pr. 20 Acceleration/deceleration reference frequency, Pr. 21 Acceleration/deceleration time increments* ☞ *Refer to page 101*
- *Pr. 79 Operation mode selection* ☞ *Refer to page 195*
- *Pr. 178 to Pr. 189 (input terminal function selection)* ☞ *Refer to page 122*

4.6.3 Input compensation of multi-speed and remote setting (Pr. 28)

By inputting the frequency setting compensation signal (terminal 1, 2), the speed (frequency) can be compensated for relative to the multi-speed setting or the speed setting by remote setting function.

Parameter Number	Name	Initial Value	Setting Range	Description
28	**Multi-speed input compensation selection**	0	0	Without compensation
			1	With compensation

The above parameters can be set when *Pr. 160 User group read selection* = "0". *(Refer to page 190)*

REMARKS

- Select the compensation input voltage (0 to ±5V, 0 to ±10V) and used terminal (terminal 1, 2) using *Pr. 73 Analog input selection*.

♦ Parameters referred to ♦

Pr. 4 to Pr. 6, Pr. 24 to Pr. 27, Pr. 232 to Pr. 239 (multi-speed operation) ☞ *Refer to page 93*
Pr. 73 Analog input selection ☞ *Refer to page 171*
Pr. 59 Remote function selection ☞ *Refer to page 98*

4.6.4 Remote setting function (Pr. 59)

- Even if the operation panel is located away from the enclosure, you can use contact signals to perform continuous variable-speed operation, without using analog signals.

Parameter Number	Name	Initial Value	Setting Range	Description		
				RH, RM, RL Signal Function	Frequency Setting Storage Function	Deceleration to the Frequency Lower Than the Set Frequency
59 Ver.UP	Remote function selection	0	0	Multi-speed setting	—	—
			1	Remote setting	Used	Disabled
			2	Remote setting	Not used	Disabled
			3	Remote setting	Not used (Turning STF/STR OFF clears remotely-set frequency.)	Disabled
			11	Remote setting	Used	Enabled
			12	Remote setting	Not used	Enabled
			13	Remote setting	Not used (Turning STF/STR OFF clears remotely-set frequency.)	Enabled

The above parameters can be set when *Pr. 160 User group read selection* = "0". *(Refer to page 190)*

Ver.UP ....Specifications differ according to the date assembled. *Refer to page 400* to check the SERIAL number.

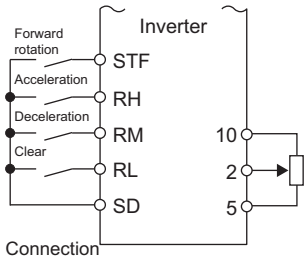

Connection diagram for remote setting

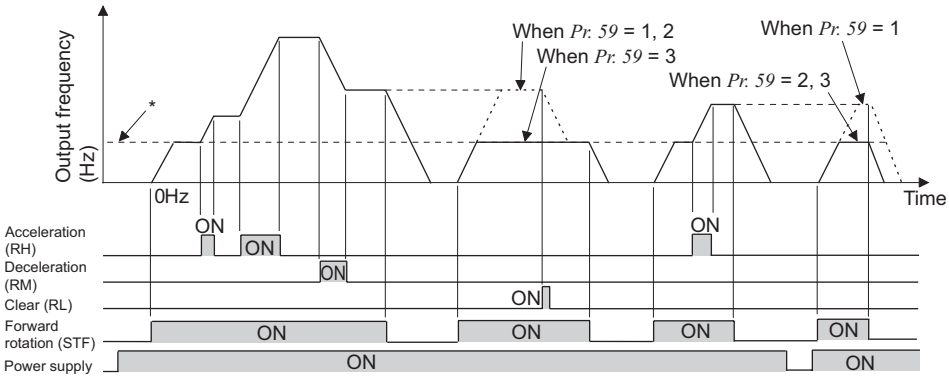

* External operation frequency (other than multi-speed) or PU running frequency

(1) Remote setting function

- Use *Pr. 59* to select whether to use the remote setting function or not and whether to use the frequency setting storage function in the remote setting mode or not.
  When *Pr. 59* setting is any of "1 to 3, 11 to 13" (remote setting function valid), the functions of the RH, RM and RL signals are changed to acceleration (RH), deceleration (RM) and clear (RL).
- When the remote function is used, the output frequency of the inverter can be compensated for as follows:
  External operation ... Frequency set with RH and RM operation + external operation frequency other than multi-speed (PU operation frequency when *Pr.79* = "3" (external, PU combined)) and terminal 4 input
  (When making analog input compensation, set "1" to *Pr. 28 Multi-speed input compensation selection*.
  When *Pr. 28* is set to "0" and acceleration/deceleration is made to reach the set frequency of the analog voltage input (terminal 2 or terminal 4) by RH/RM, the auxiliary input by terminal 1 becomes invalid.)
  PU operation..... Frequency set by RH/RM operation + PU running frequency
- By setting *Pr. 59* = "11 to 13", the speed can be decelerated to the frequency lower than the main speed (set by the external operation frequency (except multi-speed setting) or PU operation frequency).

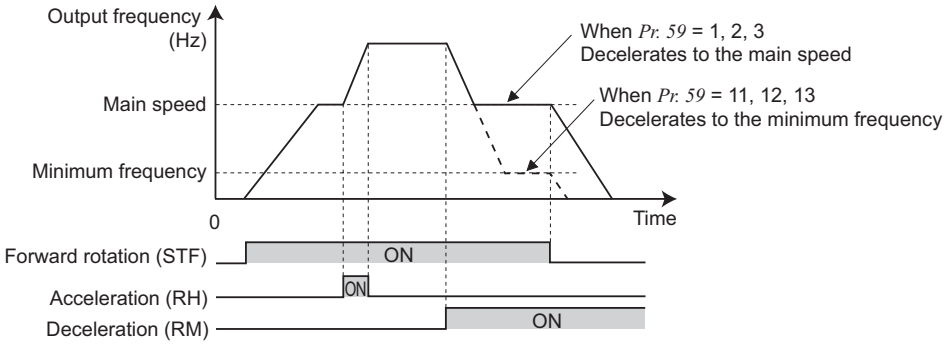

(2) Frequency setting storage

- The frequency setting storage function stores the remotely-set frequency (frequency set by RH/RM operation) into the memory (EEPROM). When power is switched OFF once, then ON, operation is resumed with the remotely set frequency. (*Pr. 59* =1, 11)

<Frequency setting storage conditions>

- The frequency when the start signal (STF or STR) turns OFF
- Remotely-set frequency is stored every minute after turning OFF (ON) the RH (acceleration) and RM (deceleration) signals together. (The frequency is overwritten if the latest frequency is different from the previous frequency when comparing the two. The state of the RL signal does not affect writing.)

CAUTION

- The range of frequency change by RH (acceleration) and RM (deceleration) is 0 to maximum frequency (*Pr. 1 or Pr. 18* setting). Note that the maximum value of set frequency is (main speed + maximum frequency).

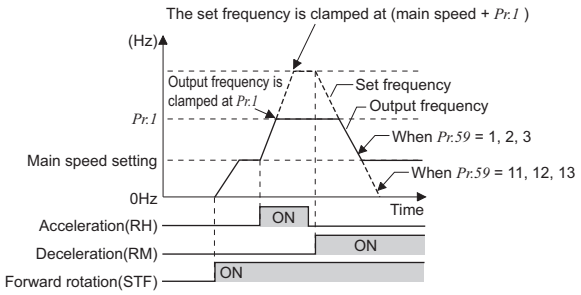

- When the acceleration or deceleration signal switches ON, acceleration/deceleration time is as set in *Pr. 44 Second acceleration/deceleration time* and *Pr. 45 Second deceleration time*. Note that when the time set in *Pr. 7* or *Pr. 8* is longer than the time set in *Pr. 44* or *Pr. 45*, the acceleration/deceleration time is as set in *Pr. 7* or *Pr. 8*. (when RT signal is OFF)
  When the RT signal is ON, acceleration/deceleration is made in the time set to *Pr. 44 Second acceleration/deceleration time* and *Pr. 45 Second deceleration time*, regardless of the *Pr. 7* or *Pr. 8* setting.
- Even if the start signal (STF or STR) is OFF, turning ON the acceleration (RH) or deceleration (RM) signal changes the preset frequency.
- When switching the start signal from ON to OFF, or changing frequency by the RH or RM signal frequently, set the frequency setting value storage function (write to EEPROM) invalid (*Pr. 59* ="2, 3, 12, 13"). If set valid (*Pr. 59* ="1, 11"), frequency is written to EEPROM frequently, and this will shorten the life of the EEPROM.
- The RH, RM, RL signals can be assigned to the input terminal using any of *Pr. 178 to Pr. 189 (input terminal function selection)*. Changing the terminal assignment using *Pr. 178 to Pr. 189 (input terminal function selection)* may affect the other functions. Set parameters after confirming the function of each terminal.
- This parameter can be also used for the Network operation mode.

REMARKS

During Jog operation or PID control operation, the remote setting function is invalid.

Setting frequency is "0"

- Even when the remotely-set frequency is cleared by turning on the RL (clear) signal after turn OFF (ON) of both the RH and RM signals, the inverter operates at the remotely-set frequency stored in the last operation if power is reapplied before one minute has elapsed since turn OFF (ON) of both the RH and RM signals

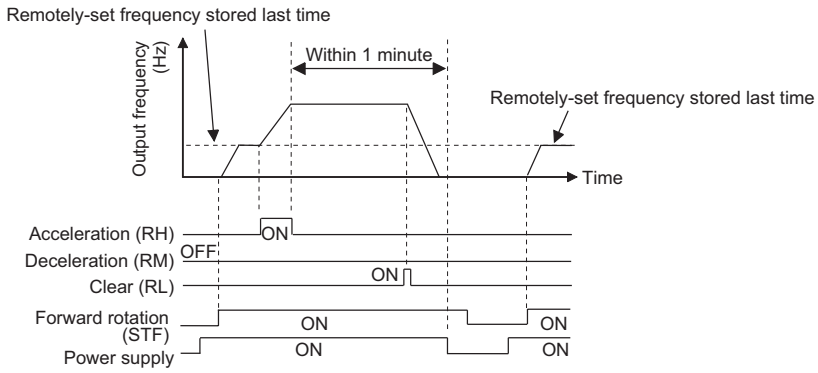

- When the remotely-set frequency is cleared by turning on the RL (clear) signal after turn OFF (ON) of both the RH and RM signals, the inverter operates at the frequency in the remotely-set frequency cleared state if power is reapplied after one minute has elapsed since turn OFF (ON) of both the RH and RM signals.

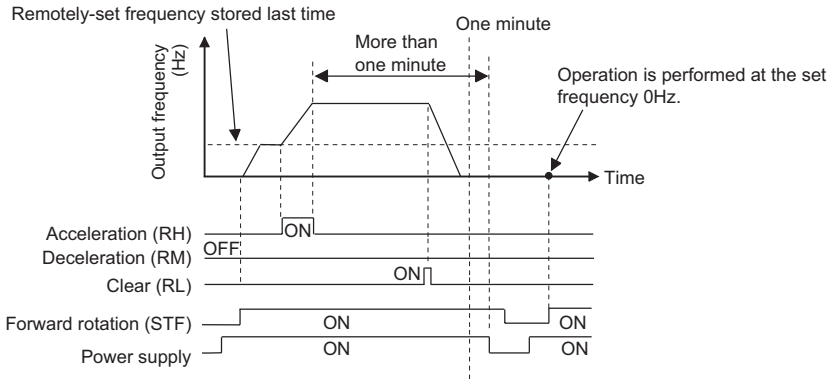

⚠ CAUTION

⚠ When selecting this function, re-set the maximum frequency according to the machine.

♦ Parameters referred to ♦

Pr. 1 Maximum frequency, Pr. 18 High speed maximum frequency ☞ *Refer to page 87*
Pr. 7 Acceleration time, Pr. 8 Deceleration time, Pr. 44 Second acceleration/deceleration time, Pr. 45 Second deceleration time. ☞ *Refer to page 101*
Pr. 28 Multi-speed input compensation selection ☞ *Refer to page 97*
Pr. 178 to Pr. 189 (input terminal function selection) ☞ *Refer to page 122*

4.7 Setting of acceleration/deceleration time and acceleration/deceleration pattern

Purpose	Parameter that must be set		Refer to page
Motor acceleration/deceleration time setting	**Acceleration/deceleration times**	**Pr.7, Pr.8, Pr.20, Pr.21, Pr.44, Pr.45, Pr.147**	101
Starting frequency	**Starting frequency and start-time hold**	**Pr.13, Pr.571**	104
Set acceleration/deceleration pattern suitable for application	**Acceleration/deceleration pattern and backlash measures**	**Pr.29, Pr.140 to Pr.143**	105

4.7.1 Setting of the acceleration and deceleration time (Pr. 7, Pr. 8, Pr. 20, Pr. 21, Pr. 44, Pr. 45, Pr. 147)

Used to set motor acceleration/deceleration time.
Set a larger value for a slower speed increase/decrease or a smaller value for a faster speed increase/decrease.
For the acceleration time at automatic restart after instantaneous power failure, refer to *Pr. 611 Acceleration time at a restart (page 152)*.

Parameter Number	Name	Initial Value 200V class (400V class)		Setting Range	Description	
7	**Acceleration time**	00340 (00170) or less	5s	0 to 3600/ 360s *2	Set the motor acceleration time.	
		00490 (00250) or more	15s			
8	**Deceleration time**	00340 (00170) or less	10s	0 to 3600/ 360s *2	Set the motor deceleration time.	
		00490 (00250) or more	30s			
20 *1	**Acceleration/ deceleration reference frequency**	60Hz		1 to 400Hz	Set the frequency that will be the basis of acceleration/deceleration time. As acceleration/deceleration time, set the frequency change time from stop to *Pr. 20*.	
21 *1	**Acceleration/ deceleration time increments**	0		0	Increments: 0.1s Range: 0 to 3600s	Increments and setting range of acceleration/ deceleration time setting can be changed.
				1	Increments: 0.01s Range: 0 to 360s	
44 *1	**Second acceleration/ deceleration time**	5s		0 to 3600/360s *2	Set the acceleration/deceleration time when the RT signal is ON.	
45 *1	**Second deceleration time**	9999		0 to 3600/360s *2	Set the deceleration time when the RT signal is ON.	
				9999	Acceleration time = deceleration time	
147 *1 Ver.UP	**Acceleration/ deceleration time switching frequency**	9999		0 to 400Hz	The frequency where the acceleration/ deceleration time switches to the time set in *Pr.44* and *Pr.45*.	
				9999	No function	

*1 The parameters can be set when *Pr. 160 User group read selection* = "0" *(Refer to page 190)*
*2 Depends on the *Pr. 21 Acceleration/deceleration time increments* setting. The initial value for the setting range is "0 to 3600s" and the setting increments is "0.1s".

Ver.UP ....Specifications differ according to the date assembled. *Refer to page 400* to check the SERIAL number.

(1) Acceleration time setting *(Pr. 7, Pr. 20)*

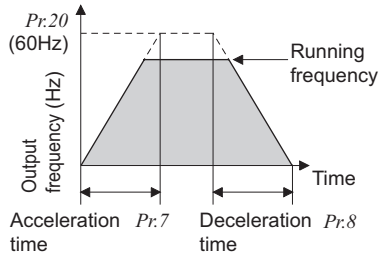

- Use *Pr. 7 Acceleration time* to set the acceleration time required to reach *Pr. 20 Acceleration/deceleration reference frequency* from 0Hz.
- Set the acceleration time according to the following formula.

$$\text{Acceleration time setting} = \frac{Pr.20}{\text{Maximum operating frequency} - Pr.13} \times \text{Acceleration time from stop to maximum operating frequency}$$

Example) How to find the setting value for *Pr. 7* when increasing the output frequency to the maximum frequency of 50Hz in 10s with *Pr. 20* = 60Hz (initial setting) and *Pr. 13* = 0.5Hz.

$$Pr.7 = \frac{60\text{Hz}}{50\text{Hz} - 0.5\text{Hz}} \times 10\text{s} \fallingdotseq 12.1\text{s}$$

(2) Deceleration time setting *(Pr. 8, Pr. 20)*

- Use *Pr. 8 Deceleration time* to set the deceleration time required to reach 0Hz from *Pr. 20 Acceleration/deceleration reference frequency*.
- Set the deceleration time according to the following formula.

$$\text{Deceleration time setting} = \frac{Pr.20}{\text{Maximum operating frequency} - Pr.10} \times \text{Deceleration time from maximum operating frequency to stop.}$$

Example) How to find the setting value for *Pr. 8* when decreasing the output frequency from the maximum frequency of 50Hz in 10s with *Pr. 20* = 120Hz and *Pr. 10* = 3Hz.

$$Pr.8 = \frac{120\text{Hz}}{50\text{Hz} - 3\text{Hz}} \times 10\text{s} \fallingdotseq 25.5\text{s}$$

(3) Change the setting range and increments of the acceleration/deceleration time *(Pr. 21)*

- Use *Pr. 21* to set the acceleration/deceleration time and minimum setting range.
  Setting "0" (initial value) ..... 0 to 3600s (minimum setting increments 0.1s)
  Setting "1" ..... 0 to 360s (minimum setting increments 0.01s)

CAUTION

- Changing the *Pr. 21* setting changes the acceleration/deceleration time setting *(Pr. 7, Pr. 8, Pr. 16, Pr. 44, Pr. 45)*.
  (The *Pr. 611 Acceleration time at a restart* setting is not affected.)
  <Example>
  When *Pr. 21* = "0", setting "5.0" s in *Pr. 7* and "1" in *Pr. 21* automatically changes the *Pr. 7* setting to "0.5" s.

(4) Set multiple acceleration/deceleration time (RT signal, *Pr. 44, Pr. 45, Pr. 147*)

- The *Pr. 44* and *Pr. 45* settings become valid when the RT signal turns ON or the output frequency reaches the value of *Pr. 147* setting or higher.
- When "9999" is set in *Pr. 45*, the deceleration time becomes equal to the acceleration time *(Pr. 44)*.
- By setting *Pr. 147*, acceleration/deceleration time can be automatically changed at turn-OFF of the RT signal.

Pr. 147 setting	Acceleration/deceleration time	Description
9999 (initial value)	*Pr. 7, Pr. 8*	Acceleration/deceleration time is not automatically changed.
0.00Hz	*Pr.44, Pr. 45*	Second acceleration/deceleration time is applied from the start.
0.01Hz ≤ *Pr. 147* ≤ set frequency	Output frequency < *Pr. 147*: *Pr. 7, Pr. 8* *Pr. 147* ≤ output frequency: *Pr. 44, Pr. 45*	Acceleration/deceleration time is automatically changed. *
Set frequency < *Pr. 147*	*Pr. 7, Pr. 8*	Not changed as the frequency has not reached the switchover frequency.

* Even if the output frequency is lower than the *Pr. 147* setting, the acceleration/deceleration time is changed to the second acceleration/deceleration time by the RT signal.

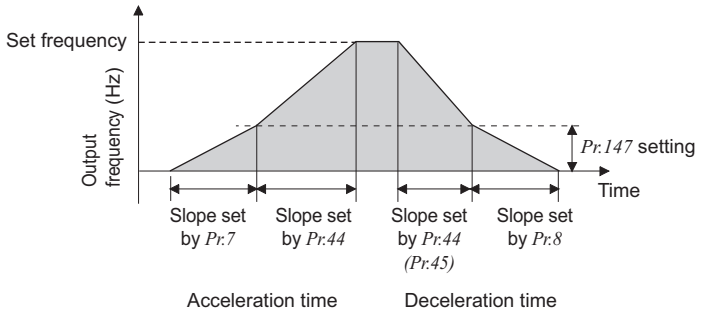

CAUTION

- In S-shaped acceleration/deceleration pattern A *(refer to page 105)*, the set time is the period required to reach the base frequency set in *Pr. 3 Base frequency*.
- Acceleration/deceleration time formula when the set frequency is the base frequency or higher

$$t = \frac{4}{9} \times \frac{T}{(Pr.3)^2} \times f^2 + \frac{5}{9}T$$

T: Acceleration/deceleration time setting value(s)
f : Set frequency(Hz)

- Guideline for acceleration/deceleration time when *Pr. 3 Base frequency* = 60Hz (0Hz to set frequency)

Frequency setting (Hz) / Acceleration/ deceleration time (s)	60	120	200	400
5	5	12	27	102
15	15	35	82	305

- The RT signal can be assigned to the input terminal using any of *Pr. 178 to Pr. 189 (Input terminal function selection)*. Changing the terminal assignment using *Pr. 178 to Pr. 189 (input terminal function selection)* may affect the other functions. Set parameters after confirming the function of each terminal.

REMARKS

- The RT signal acts as the second function selection signal and makes the other second function valid. *(Refer to page 125)*
- The RT signal is assigned to the RT terminal in the default setting. By setting "3" to any of *Pr. 178 to Pr. 189 (Input terminal function selection)*, you can assign the RT signal to the other terminal.
- If the *Pr. 20* setting is changed, the *Pr. 125 and Pr. 126 (frequency setting signal gain frequency)* settings do not change. Set *Pr. 125 and Pr. 126* to adjust the gains.
- When the *Pr. 7, Pr. 8, Pr. 44 and Pr. 45* settings are 0.03s or less, the acceleration/deceleration time is 0.04s. At that time, set *Pr. 20* to "120Hz" or less.
- If the acceleration/deceleration time is set, the actual motor acceleration/deceleration time cannot be made shorter than the shortest acceleration/deceleration time determined by the mechanical system J (moment of inertia) and motor torque.

♦ Parameters referred to ♦

Pr. 3 Base frequency ☞ *Refer to page 89*
Pr. 10 DC injection brake operation frequency ☞ *Refer to page 112*
Pr. 29 Acceleration/deceleration pattern selection ☞ *Refer to page 105*
Pr. 125, Pr. 126 (Frequency setting gain frequency) ☞ *Refer to page 177*
Pr. 178 to Pr.189 (Input terminal function selection) ☞ *Refer to page 122*
Pr. 999 Automatic parameter setting ☞ *Refer to page 309*

4.7.2 Starting frequency and start-time hold function (Pr. 13, Pr. 571)

You can set the starting frequency and hold the set starting frequency for a certain period of time.
Set these functions when you need the starting torque or want to smooth motor drive at a start.

Parameter Number	Name	Initial Value	Setting Range	Description
13	**Starting frequency**	0.5Hz	0 to 60Hz	Frequency at start can be set in the range 0 to 60Hz. You can set the starting frequency at which the start signal is turned ON.
571	**Holding time at a start**	9999	0.0 to 10.0s	Set the holding time of *Pr. 13 Starting frequency*.
			9999	Holding function at a start is invalid

The above parameters can be set when *Pr. 160 User group read selection* = "0". *(Refer to page 190)*

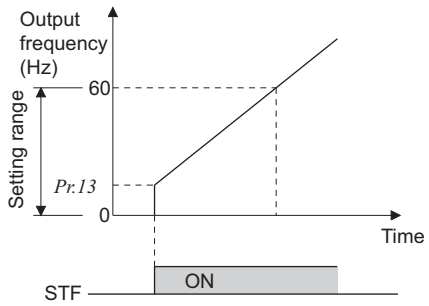

(1) Starting frequency setting *(Pr. 13)*

- Frequency at start can be set in the range 0 to 60Hz.
- You can set the starting frequency at which the start signal is turned ON.

CAUTION

The inverter will not start if the frequency setting signal is less than the value set in *Pr. 13*.
For example, when 5Hz is set in *Pr. 13*, the motor will not start running until the frequency setting signal reaches 5Hz.

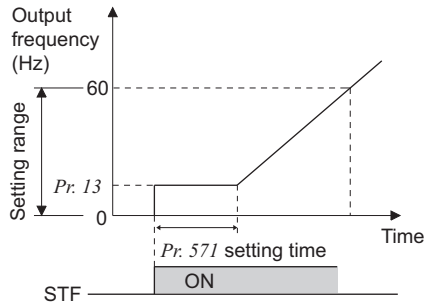

(2) Start-time hold function *(Pr. 571)*

- This function holds the output frequency set in *Pr. 13 Starting frequency* during the period set in *Pr. 571*.
- This function performs initial excitation to smooth the motor drive at a start.

REMARKS

When *Pr. 13* = "0Hz", the starting frequency is held at 0.01Hz.

CAUTION

- When the start signal was turned OFF during start-time hold, deceleration is started at that point.
- At switching between forward rotation and reverse rotation, the starting frequency is valid but the start-time hold function is invalid.

⚠ CAUTION

⚠ Note that when *Pr. 13* is set to any value lower than *Pr. 2 Minimum frequency*, simply turning ON the start signal will run the motor at the preset frequency even if the command frequency is not input.

♦ Parameters referred to ♦

Pr.2 Minimum frequency ☞ *Refer to page 87*

4.7.3 Acceleration/deceleration pattern (Pr. 29, Pr. 140 to Pr. 143)

You can set the acceleration/deceleration pattern suitable for application.
You can also set the backlash measures that stop acceleration/deceleration once at the parameter-set frequency and time during acceleration/deceleration.

Parameter Number	Name	Initial Value	Setting Range	Description
29 Ver. UP	Acceleration/deceleration pattern selection	0	0	Linear acceleration/ deceleration
			1	S-pattern acceleration/deceleration A
			2	S-pattern acceleration/deceleration B
			3	Backlash measures
			6	Variable-torque acceleration/ deceleration
140	Backlash acceleration stopping frequency	1Hz	0 to 400Hz	Set the stopping frequency and time for backlash measures. Valid when *Pr. 29* = 3
141	Backlash acceleration stopping time	0.5s	0 to 360s	
142	Backlash deceleration stopping frequency	1Hz	0 to 400Hz	
143	Backlash deceleration stopping time	0.5s	0 to 360s	

The above parameters can be set when *Pr. 160 User group read selection* = "0". *(Refer to page 190)*

Ver. UP … Specifications differ according to the date assembled. *Refer to page 400* to check the SERIAL number.

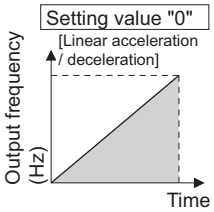

(1) Linear acceleration/ deceleration (*Pr. 29* = "0", initial value)

· When the frequency is changed for acceleration, deceleration, etc. in inverter operation, the output frequency is changed linearly (linear acceleration/ deceleration) to reach the set frequency without straining the motor and inverter. Linear acceleration/deceleration has a uniform frequency/time slope.

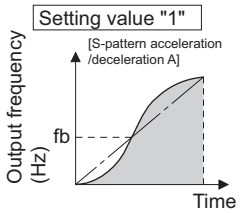

(2) S-pattern acceleration/deceleration A (*Pr. 29* = "1")

· For machine tool spindle applications, etc.
Used when acceleration/deceleration must be made in a short time to a high-speed range of not lower than the base frequency. In this acceleration/ deceleration pattern, *Pr. 3 Base frequency* (fb) is the inflection point of the S pattern and you can set the acceleration/deceleration time appropriate for motor torque reduction in a constant-power operation range of base frequency (fb) or higher.

CAUTION

· As the acceleration/deceleration time of S-pattern acceleration/deceleration A, set the time taken until *Pr. 3* Base frequency is reached, not *Pr. 20 Acceleration/deceleration reference frequency*.

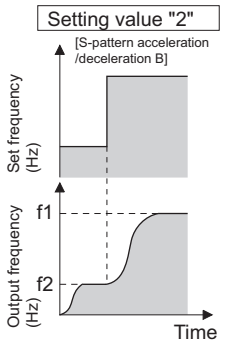

(3) S-pattern acceleration/deceleration B (*Pr. 29* = "2")

- For prevention of load shifting in conveyor and other applications. Since acceleration/deceleration is always made in an S shape from current frequency (f2) to target frequency (f1), this function eases shock produced at acceleration/deceleration and is effective for load collapse prevention, etc.

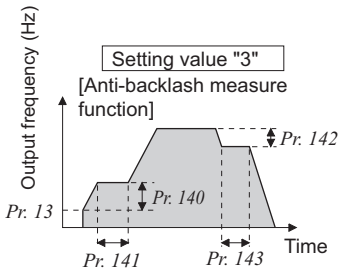

(4) Backlash measures (*Pr. 29* = "3", *Pr. 140 to Pr. 143*)

- What is backlash?
  Reduction gears have an engagement gap and have a dead zone between forward rotation and reverse rotation. This dead zone is called backlash, and this gap disables a mechanical system from following motor rotation.
  More specifically, a motor shaft develops excessive torque when the direction of rotation changes or when constant-speed operation shifts to deceleration, resulting in a sudden motor current increase or regenerative status.
- To avoid backlash, acceleration/deceleration is temporarily stopped.
  Set the acceleration/deceleration stopping frequency and time in *Pr. 140 to Pr. 143*.

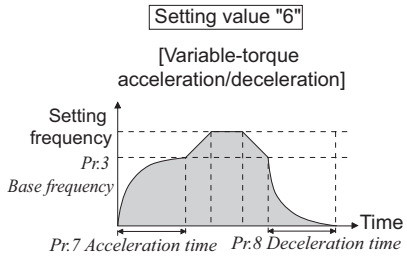

(5) Variable-torque acceleration/deceleration (*Pr.29* = "6")

- This function is useful for variable-torque load such as a fan and blower to accelerate/decelerate in short time.
  In areas where output frequency > base frequency, the speed accelerates/decelerates linearly.

CAUTION

- As the acceleration/deceleration time of variable-torque acceleration/deceleration, set the time taken to reach *Pr. 3 Base frequency*, not *Pr. 20 Acceleration/deceleration reference frequency*.

REMARKS

- When the base frequency is not 45 to 65Hz, the speed accelerates/decelerates linearly even though *Pr. 29* = "6".
- Variable-torque acceleration/deceleration overrides *Pr. 14* = "1" setting (for variable-torque load). Thus, when *Pr. 14* = "1" while variable-torque acceleration/deceleration is valid, inverter operates as *Pr. 14* = "0" (for constant-torque load).

CAUTION

Setting the backlash measures increases the acceleration/deceleration time by the stopping time.

♦ Parameters referred to ♦

Pr. 3 Base frequency ☞ *Refer to page 89*
Pr. 7 Acceleration time, Pr. 8 Deceleration time, Pr. 20 Acceleration/deceleration reference frequency ☞ *Refer to page 101*
Pr. 14 Load pattern selection ☞ *Refer to page 91*

4.8 Selection and protection of a motor

Purpose	Parameter that must be Set		Refer to page
Motor protection from overheat	**Electronic thermal O/L relay**	**Pr. 9, Pr. 51**	107
Use the constant-torque motor	**Applied motor**	**Pr. 71**	111

4.8.1 Motor protection from overheat (Electronic thermal relay function) (Pr. 9, Pr. 51)

Set the current of the electronic thermal O/L relay to protect the motor from overheat. This feature provides the optimum protective characteristics, including reduced motor cooling capability, at low speed.

Parameter Number	Name	Initial Value	Setting Range 200V class (400V class)		Description
9	**Electronic thermal O/L relay**	Rated inverter current	02330 (01160) or less	0 to 500A	Set the rated motor current.
			03160 (01800) or more	0 to 3600A	
51 *1	**Second electronic thermal O/L relay *2**	9999	02330 (01160) or less	0 to 500A	Valid when the RT signal is ON. Set the rated motor current.
			03160 (01800) or more	0 to 3600A	
			9999		Second electronic thermal O/L relay invalid

*1 The parameters can be set when *Pr. 160 User group read selection* = "0" *(Refer to page 190)*
*2 When parameter is read using the FR-PU04, a parameter name different from an actual parameter is displayed.

(1) Electronic thermal relay function operation characteristic (THM)

[Electronic thermal relay function operation characteristic (E.THM)]

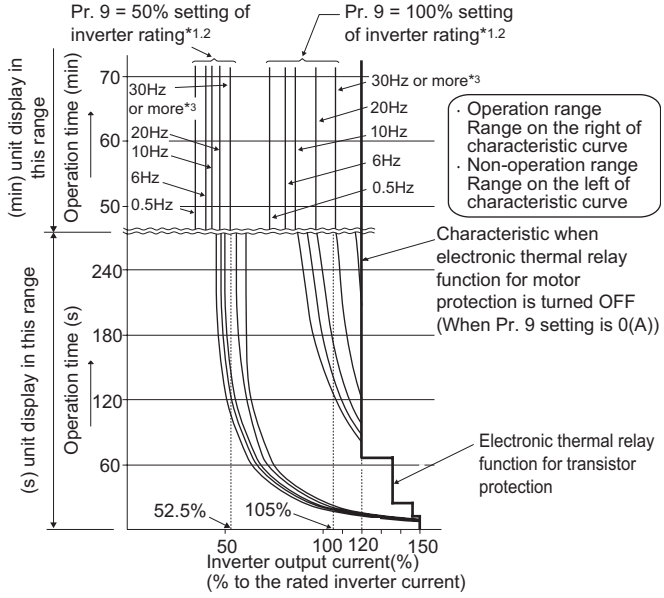

This function detects the overload (overheat) of the motor and the inverter trips. (The operation characteristic is shown on the left)

- Set the rated current [A] of the motor in *Pr. 9*.
  (If the motor has both 50Hz and 60Hz rating and the *Pr.3 Base frequency* is set to 60 Hz, set the 1.1 times of the 60Hz rated motor current.)
- Set "0" in *Pr. 9* when you do not want to activate the electronic thermal relay function, e.g. when using an external thermal relay with the motor. (Note that the output transistor protection of the inverter functions (E.THT).)
- When using the Mitsubishi constant-torque motor
  1) Set "1" in *Pr. 71*. (This provides a 100% continuous torque characteristic in the low-speed range.)
  2) Set the rated current of the motor in *Pr. 9*.

*1 When 50% of the inverter rated output current (current value) is set in *Pr. 9*
*2 The % value denotes the percentage to the inverter rated current. It is not the percentage to the motor rated current.
*3 When you set the electronic thermal relay function dedicated to the Mitsubishi constant-torque motor, this characteristic curve applies to operation at 6Hz or higher.

CAUTION

- Protective function by electronic thermal relay function is reset by inverter power reset and reset signal input. Avoid unnecessary reset and power-OFF.
- When multiple motors are operated by a single inverter, protection cannot be provided by the electronic thermal relay function. Install an external thermal relay to each motor.
- When the difference between the inverter and motor capacities is large and the setting is small, the protective characteristics of the electronic thermal relay function will be deteriorated. In this case, use an external thermal relay.
- A special motor cannot be protected by the electronic thermal relay function. Use the external thermal relay.

(2) Electronic thermal relay function operation characteristic (THT)

Electronic thermal relay function (transistor protection thermal) operation characteristics of the inverter when the ratio of the motor current to the inverter rated current is presented as transverse is shown. Transverse is calculated as follows: (motor current [A]/inverter rated current [A]) × 100 [%].

Optimum Conditions	Inverter Capacity	
	FR-F720-02330 (FR-F740-01160) or less	FR-F720-03160 (FR-F740-01800) or more
Running frequency : 1Hz or more Carrier frequency: 2kHz	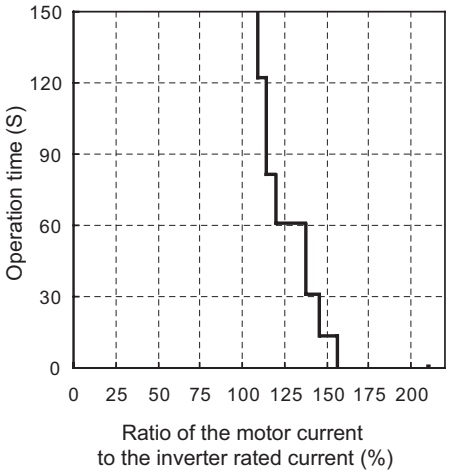	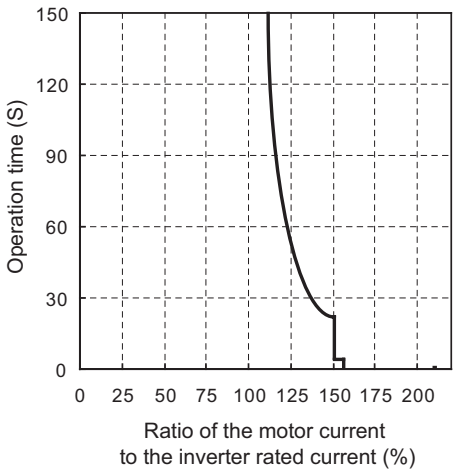
Running frequency : 1Hz or less Carrier frequency: 2kHz	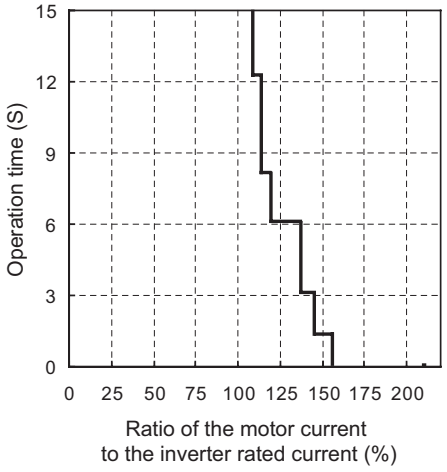	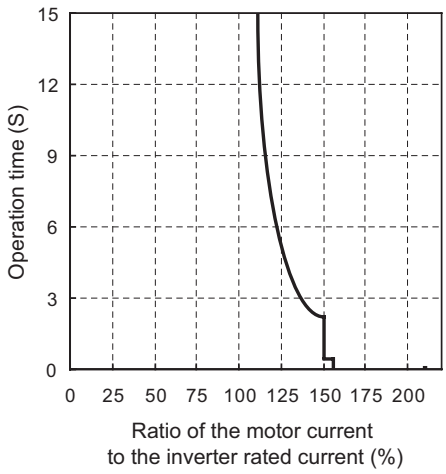

CAUTION

- Protective function by electronic thermal relay function is reset by inverter power reset and reset signal input. Avoid unnecessary reset and power-OFF.
- The operation time of the transistor protection thermal relay shortens when the *Pr. 72 PWM frequency selection* setting increases

(3) Set multiple electronic thermal relay functions *(Pr. 51)*

Use this function when rotating two motors of different rated currents individually by a single inverter. (When rotating two motors together, use external thermal relays.)

- Set the rated current of the second motor in *Pr. 51*.
- When the RT signal is ON, thermal protection is provided based on the *Pr. 51* setting.

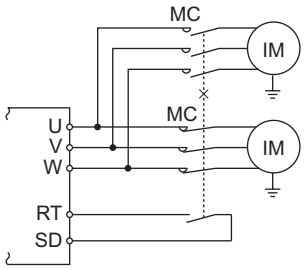

REMARKS

- The RT signal acts as the second function selection signal and makes the other second functions valid. *(Refer to page 124)*
- The RT signal is assigned to the RT terminal in the initial setting. By setting "3" in any of *Pr. 178 to Pr. 189 (input terminal function selection)*, you can assign the RT signal to the other terminal.

(4) Electronic thermal relay function prealarm (TH) and alarm signal (THP signal)

100%: Electronic thermal relay function alarm operation value

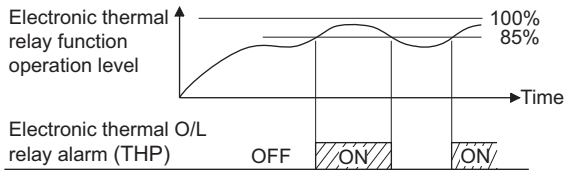

- The alarm signal (THP) is output and electronic thermal relay function prealarm (TH) is displayed when the electronic thermal value reaches 85% of the level set in *Pr. 9* or *Pr. 51*. If it reaches 100% of the *Pr. 9 Electronic thermal O/L relay* setting, an electronic thermal relay protection (E.THM/E.THT) activates.
- The inverter does not trip even when the alarm signal (THP) is output.
- For the terminal used for the THP signal output, assign the function by setting "8" (positive logic) or "108" (negative logic) in any of *Pr. 190 to Pr. 196 (output terminal function selection)*.

CAUTION

- Changing the terminal assignment using *Pr. 190 to Pr. 196 (output terminal function selection)* may affect the other functions. Set parameters after confirming the function of each terminal.

(5) External thermal relay input (OH signal)

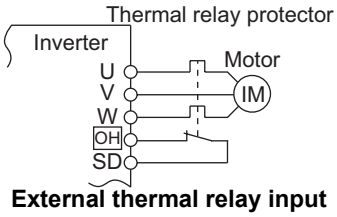

External thermal relay input connection example

- To protect the motor against overheat, use the OH signal when using an external thermal relay or the built-in thermal protector of the motor.
- When the thermal relay operates, the inverter trips and outputs the fault signal (E.OHT).
- For the terminal used for OH signal input, assign the function by setting "7" in any of *Pr. 178 to Pr. 189 (input terminal function selection)*

CAUTION

- Changing the terminal assignment using *Pr. 178 to Pr. 189 (input terminal function selection)* may affect the other functions. Set parameters after confirming the function of each terminal.

(6) PTC thermistor input (PTC signal)

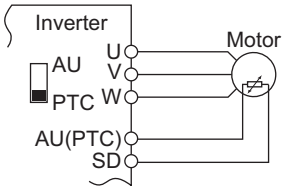

PTC thermistor input connection example

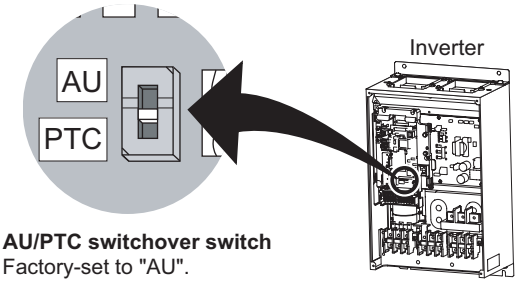

AU/PTC switchover switch
Factory-set to "AU".
Set to the "PTC" position to validate the PTC signal input.

Built-in PTC thermistor of the motor can be input to the PTC signal (AU terminal).

- For the terminal used for PTC signal input, assign the function by setting "63" in *Pr. 184 AU terminal function selection* and also set the AU/PTC switchover switch to the PTC terminal function. (The initial setting is the AU terminal function.)
- If a motor overheat state is detected for more than 10s according to the input from the PTC thermistor, the inverter shuts off the output and outputs the PTC thermal fault signal (E.PTC).
- The input specifications of the PTC thermistor are shown on the right.

Motor Temperature	PTC Thermistor Resistance Value (Ω)
Normal	0 to 500
Boundary	500 to 4k
Overheat	4k or higher

CAUTION

- When the PTC signal was not assigned to *Pr. 184* and the AU/PTC switchover switch was set to the PTC terminal function, the function assigned to the AU terminal is always OFF. Reversely, when the PTC signal was assigned to *Pr. 184* and the AU/PTC switchover switch was set to the AU terminal function, a PTC thermal error (E.PTC) occurs since the function is always in a motor overheat state.
- When you want to input a current, assign the AU signal to the other signal.
- Changing the terminal assignment using *Pr. 178 to Pr. 189 (input terminal function selection)* may affect the other functions. Set parameters after confirming the function of each terminal.

♦ Parameters referred to ♦

Pr. 71 Applied motor ☞ *Refer to page 111*
Pr. 72 PWM frequency selection ☞ *Refer to page 169*
Pr. 178 to Pr. 189 (Input terminal function selection) ☞ *Refer to page 122*
Pr. 190 to Pr. 196 (Output terminal function selection) ☞ *Refer to page 128*
Specifications of the AU terminal ☞ *Refer to page 27*

4.8.2 Applied motor (Pr. 71)

Setting of the used motor selects the thermal characteristic appropriate for the motor.
Setting is necessary when using a constant-torque motor. Thermal characteristic of the electronic thermal relay function suitable for the motor is set.

Parameter Number	Name	Initial Value	Setting Range	Description
71	**Applied motor**	0	0, 1, 2, 20	Selecting the standard motor or constant-torque motor sets the corresponding motor thermal characteristic.

The above parameters can be set when *Pr. 160 User group read selection* = "0". *(Refer to page 190)*

Refer to the following list and set this parameter according to the motor used.

Pr. 71 Setting	Thermal Characteristic of the Electronic Thermal Relay Function	Motor (○ : used motor)	
		Standard (SF-JR, etc.)	Constant-torque (SF-HRCA, etc.)
0 (initial value)	Thermal characteristics of a standard motor	○	
1	Thermal characteristics of the Mitsubishi constant-torque motor		○
2	Thermal characteristics of a standard motor Adjustable 5 points V/F *(Refer to page 92)*	○	
20	Mitsubishi standard motor SF-JR 4P(1.5kW(2HP) or less)	○	

REMARKS

- For the FR-F720-00250 and 00490 and the FR-F740-00126 and 00170, the *Pr. 0 Torque boost* and *Pr. 12 DC injection brake operation voltage* settings are automatically changed according to the *Pr. 71* setting as follows.

Pr. 71	Standard Motor Setting 0, 2, 20	Constant-torque Motor Setting 1
Pr. 0	3%	2%
Pr. 12	4%	2%

⚠ CAUTION

⚠ Make sure to set this parameter correctly according to the motor used.
Incorrect setting may cause the motor to overheat and burn.

♦ Parameters referred to ♦

Pr. 0 Torque boost ☞ *Refer to page 78*
Pr. 12 DC injection brake operation voltage ☞ *Refer to page 112*
Pr. 100 to Pr. 109 (Adjustable 5 points V/F) ☞ *Refer to page 92*

4.9 Motor brake and stop operation

Purpose	Parameter that must be set		Refer to Page
Motor braking torque adjustment	**DC injection brake**	**Pr. 10 to Pr. 12**	112
Improve the motor braking torque with an option	**Selection of a regenerative brake**	**Pr. 30, Pr. 70**	114
Performing operation by DC current input	**DC current feeding mode**	**Pr. 30**	114
Coast the motor to a stop	**Selection of motor stopping method**	**Pr. 250**	119
	Output stop function	**Pr. 522**	120

4.9.1 DC injection brake (Pr. 10 to Pr. 12)

The DC injection brake can be operated at a motor stop to adjust the stop timing and braking torque.
In DC injection brake operation, DC voltage is directly applied to the motor to prevent the motor shaft from rotating when a motor decelerates to stop.
The motor will not return to the original position if the motor shaft rotates due to external force.

Parameter Number	Name	Initial Value 200V class (400V class)		Setting Range	Description
10	**DC injection brake operation frequency**	3Hz		0 to 120Hz	Set the operation frequency of the DC injection brake.
				9999	Operated at *Pr. 13* or less.
11	**DC injection brake operation time**	0.5s		0	DC injection brake disabled
				0.1 to 10s	Set the operation time of the DC injection brake.
				8888	Operate when X13 signal is ON
12	**DC injection brake operation voltage**	00340 (00170) or less	4%	0 to 30%	Set the DC injection brake voltage (torque). When "0" is set, DC injection brake is disabled.
		00490 to 02330 (00250 to 01160)	2%		
		03160 (01800) or more	1%		

The above parameters can be set when *Pr. 160 User group read selection* = "0". *(Refer to page 190)*

When *Pr. 11*="0.1 to 10s"

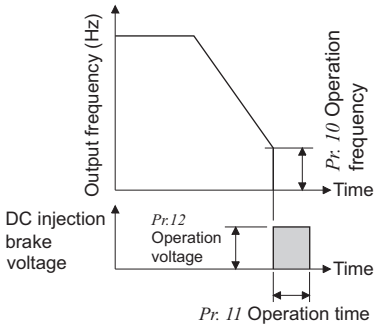

When *Pr. 11*="8888"

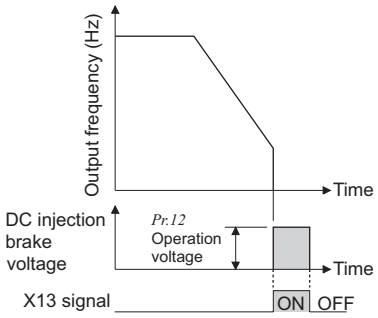

(1) Operation frequency setting *(Pr. 10)*

- When the frequency at which the DC injection brake will be operated is set to *Pr. 10*, the DC voltage is applied to the motor upon reaching to the set frequency during deceleration.
- At the *Pr. 10* setting of "9999", the DC injection brake is operated when deceleration is made to the frequency set in *Pr. 13 Starting frequency*.

(2) Operation time setting *(Pr. 11)*

- In *Pr. 11*, set the time of the DC injection brake.
- When *Pr. 11* = "0s", the DC injection brake is disabled. (At a stop, the motor coasts.)
- When *Pr. 11*="8888", the DC injection brake is applied while X13 signal is ON.
- For the terminal used for X13 signal input, set "13" in any of *Pr. 178 to Pr. 189* to assign the function. *(Refer to page 122.)*
- When the motor does not stop due to large load moment (J), increasing the setting produces an effect.

(3) Operation voltage (torque) setting *(Pr. 12)*

- Use *Pr. 12* to set the percentage to the power supply voltage.
- When *Pr. 12* = "0%", the DC injection brake is disabled. (At a stop, the motor coasts.)
- When using the constant-torque motor (SF-JRCA) and energy saving motor (SF-HR, SF-HRCA), change the *Pr. 12* setting as follows.
  SF-JRCA: FR-F720-00167 (FR-F740-00083) or less ...4%,
  FR-F720-00250 to 02330 (FR-F740-00126 to 01160)...2%
  SF-HR, SF-HRCA: FR-F720-00167 (FR-F740-00083) or less...4%,
  FR-F720-00250 and 00340 (FR-F740-00126 and 00170)...3%,
  FR-F720-00490 to 02330 (FR-F740-00250 to 01160)...2% (FR-F740-00620...1.5%)

REMARKS

- For the 00126 and 00170, when the *Pr. 12* setting is as below, changing the *Pr. 71 Applied motor* setting changes the *Pr. 12* setting automatically, it is not necessary to change the *Pr. 12* setting.
  (a) When *Pr. 12* is 4% (initial value)
  The *Pr. 12* setting is automatically changed to 2% if the *Pr. 71* value is changed from the value selecting the standard motor (0, 2) to the value selecting the constant motor (1).
  (b) When *Pr. 12* is 2%
  The *Pr. 12* setting is automatically changed to 4% if the *Pr. 71* value is changed from the value selecting the constant motor (1) to the value selecting the standard motor (0, 2).
- Even if the *Pr. 12* setting is increased, braking torque is limited so that the output current is within the rated inverter current.

⚠ CAUTION

⚠ As stop holding torque is not produced, install a mechanical brake.

♦ Parameters referred to ♦

Pr. 13 Starting frequency ☞ *Refer to page 104*
Pr. 71 Applied motor ☞ *Refer to page 111*

4.9.2 Selection of a regenerative brake and DC feeding (Pr. 30, Pr. 70)

- When making frequent starts/stops, use the optional brake unit (FR-BU2, BU, FR-BU, MT-BU) to increase the regenerative brake duty.
- Use a power regeneration common converter (FR-CV) or power regeneration converter (MT-RC) for continuous operation in regenerative status.
  Use a high power factor converter (FR-HC, MT-HC) to reduce harmonics, improve the power factor, or continuously use the regenerative mode.
- You can select DC feeding mode 1, which operates with DC power supply (terminal P/+, N/-), or DC feeding mode 2, which normally operates with AC power supply (terminal R/L1, S/L2, T/L3) and with DC power supply such as battery at power failure occurrence.

Parameter Number	Name	Initial Value	Setting Range	Description		
				Regeneration unit	**Terminal for power supply to the inverter**	**Reset at main circuit power supply ON**
30 Ver.UP	**Regenerative function selection**	0	0	Inverter without regenerative function, brake unit (FR-BU2, FR-BU, BU type)	R/L1, S/L2, T/L3	Reset
			100			Not reset
			10		P/+, N/- (DC feeding mode 1)	-
			20		R/L1, S/L2, T/L3 - P/+, N/- (DC feeding mode 2)	Reset
			120			Not reset
			1	Brake unit (MT-BU5), power regeneration converter (MT-RC)	R/L1, S/L2, T/L3	Reset
			101			Not reset
			11		P/+, N/- (DC feeding mode 1)	-
			21		R/L1, S/L2, T/L3 - P/+, N/- (DC feeding mode 2)	Reset
			121			Not reset
			2	High power factor converter (FR-HC, MT-HC), power regeneration common converter (FR-CV)	P/+, N/-	-
70	**Special regenerative brake duty**	0%	0 to 10%	Set the %ED of the brake transistor operation when using a brake unit (MT-BU5). (Setting is available only for the FR-F720-03160 (FR-F740-01800) or more)		

The above parameters can be set when *Pr. 160 User group read selection* = "0". *(Refer to page 190)*

Ver.UP ....Specifications differ according to the date assembled. *Refer to page 400* to check the SERIAL number.

<FR-F720-02330 (FR-F740-01160) or less>

Regeneration Unit	Power Supply to the Inverter	*Pr. 30* Setting
Inverter without regenerative function, brake unit (FR-BU2, FR-BU, BU)	R/L1, S/L2, T/L3	0 (initial value), 100
	P/+, N/-	10
	R/L1, S/L2, T/L3 - P/+, N/-	20, 120
High power factor converter (FR-HC), power regeneration common converter (FR-CV)	P/+, N/-	2

<FR-F720-03160 (FR-F740-01800) or more>

Regeneration Unit	Power Supply to the Inverter	*Pr. 30* Setting	*Pr. 70* Setting
Brake unit (FR-BU2)	R/L1, S/L2, T/L3	0 (initial value), 100	—
	P/+, N/-	10	
	R/L1, S/L2, T/L3 - P/+, N/-	20, 120	
Power regeneration converter (MT-RC)	R/L1, S/L2, T/L3	1, 101	0% (initial value)
Brake unit (MT-BU5)	R/L1, S/L2, T/L3	1, 101	10%
	P/+, N/-	11	
	R/L1, S/L2, T/L3 - P/+, N/-	21, 121	
High power factor converter (MT-HC)	P/+, N/-	2	—

(1) When the brake unit (FR-BU2, BU, FR-BU) is used

- Set "0 (initial value), 10, 20, 100 or 120" in *Pr. 30*. The *Pr. 70* setting is invalid.

CAUTION

- Set "1" in *Pr. 0 Brake mode selection* of the FR-BU2 to use GRZG type discharging resistor.
- Do not operate the MT-BU5 type brake unit and FR-BU2 in parallel. Doing so could cause an alarm or brake unit failure. Use the FR-BU2 only when performing parallel operation.

(2) When using a brake unit (MT-BU5) and power regeneration converter (MT-RC) (FR-F720-03160 (FR-F740-01800) or more)

- Set "1, 11, 21, 101 or 121" in *Pr. 30*.
- Set "10%" In *Pr. 70* when using a brake unit (MT-BU5).
- Set "0%" in *Pr. 70* when using a power regeneration converter (MT-RC).

CAUTION

- Set "2" in *Pr. 0 Brake mode selection* of the FR-BU2 to use MT-BR5 type resistor unit.

(3) When using the high power factor converter (FR-HC, MT-HC) or power regeneration common converter (FR-CV)

- Set "2" in *Pr. 30*. The *Pr. 70* setting is invalid.
- Use any of *Pr. 178 to Pr. 189 (Input terminal function assignment)* to assign the following signals to the contact input terminals.
  - (a) X10 signal: FR-HC, MT-HC connection, FR-CV connection (inverter operation enable signal)
    To make protective coordination with the FR-HC, MT-HC or FR-CV, use the inverter operation enable signal to shut off the inverter output. Input the RDY signal of the FR-HC, MT-HC (RDYB signal of the FR-CV).
  - (b) X11 signal: FR-HC, MT-HC connection (instantaneous power failure detection signal)
    When the setting has been made to hold the mode at occurrence of an instantaneous power failure for RS-485 communication operation, use this signal to hold the mode. Input the Y1 or Y2 signal (instantaneous power failure detection signal) of the FR-HC, MT-HC.
- For the terminal used for X10 or X11 signal input, assign its function by setting "10" (X10) or "11" (X11) in any of *Pr. 178 to Pr. 189*.

REMARKS

- When *Pr. 30* = "2", "Err" is displayed on the operation panel as the inverter is reset by the setting.

(4) DC feeding mode 1 (*Pr. 30* = "10, 11")

- Setting "10, 11" in *Pr. 30* enables DC power supply operation.
- Leave the AC power supply connection terminal R/L1, S/L2, and T/L3 open and connect the DC power supply to terminal P/+ and N/-. Also, remove jumpers across terminal R/L1 and R1/L11 as well as S/L2 and S1/L21, and connect terminals R1/L11 and S1/L21 to terminal P/+ and N/-.
- The diagram below is a connection example.

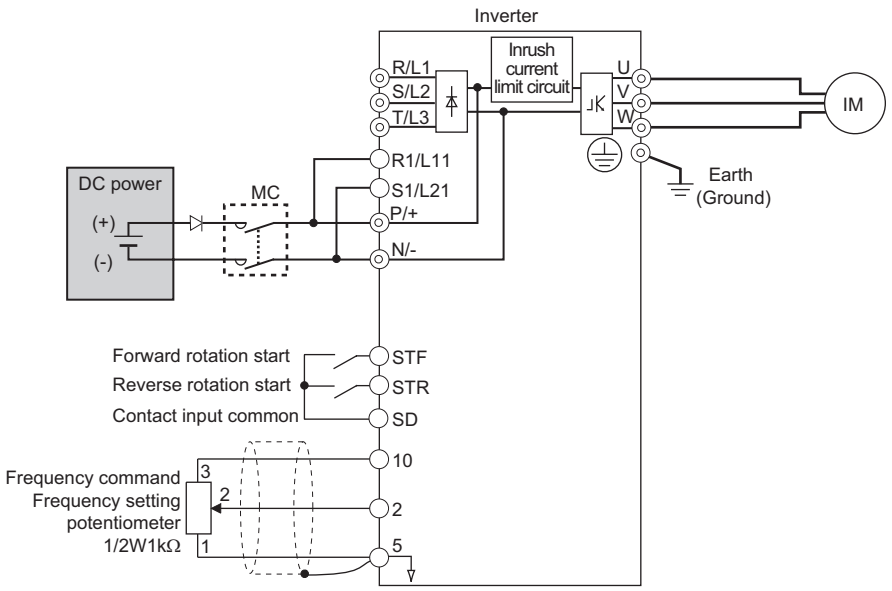

(5) DC feeding mode 2 (*Pr. 30* = "20, 21, 120 or 121")

- When "20, 21, 120 or 121" is set in *Pr. 30*, operation is performed with AC power supply normally and with DC power supply such as battery at power failure.
- Connect the AC power supply to terminal R/L1, S/L2, and T/L3 and connect the DC power supply to terminal P/+ and N/-. Also, remove jumpers across terminal R/L1 and R1/L11 as well as S/L2 and S1/L21, and connect terminals R1/L11 and S1/L21 to terminal P/+ and N/-.
- Turning ON the DC feeding operation permission signal (X70) enables DC power supply operation. Refer to the table below for I/O signals.

Signal		Name	Description	Parameter Setting
Input	X70	DC feeding operation permission signal	When performing operation with DC feeding, turn ON the X70 signal. When the inverter output is shut off because of power failure, the inverter can be started in about 150ms after switching OFF the X70 signal then ON again. (When automatic restart operation is valid, the inverter starts after additional *Pr. 57* set time has elapsed.) When the X70 signal turns OFF during inverter operation, output is shutoff (*Pr .261* = 0) or the inverter is decelerated to a stop (*Pr. 261* ≠ 0).	Set 70 in any of *Pr. 178* to *Pr. 189*.
	X71	DC feeding cancel signal	Turn this signal ON to stop DC feeding. When the X71 signal is turned ON during inverter operation with turning ON the X70 signal, output is shutoff (*Pr. 261* = 0) or the inverter is decelerated to a stop (*Pr. 261* ≠ 0), then the X85 signal turns OFF after the inverter stop. After turning ON the X71 signal, operation cannot be performed even if the X70 signal is turned ON.	Set 71 in any of *Pr. 178* to *Pr. 189*.
Output	Y85	DC feeding signal	This signal turns ON during power failure or under voltage of AC power. The signal turns OFF when the X71 signal turns ON or power is restored. The Y85 signal does not turn OFF during inverter operation even if the power is restored and turns OFF after an inverter stop. When the Y85 signal turns ON because of undervoltage, the Y85 signal does not turn OFF even if undervoltage is eliminated. ON/OFF status is retained at an inverter reset.	Set "85 (positive logic) or 185 (negative logic)" in any of *Pr. 190* to *Pr. 196*

- The following shows the connection diagram when switching to DC power supply using inverter power failure detection.

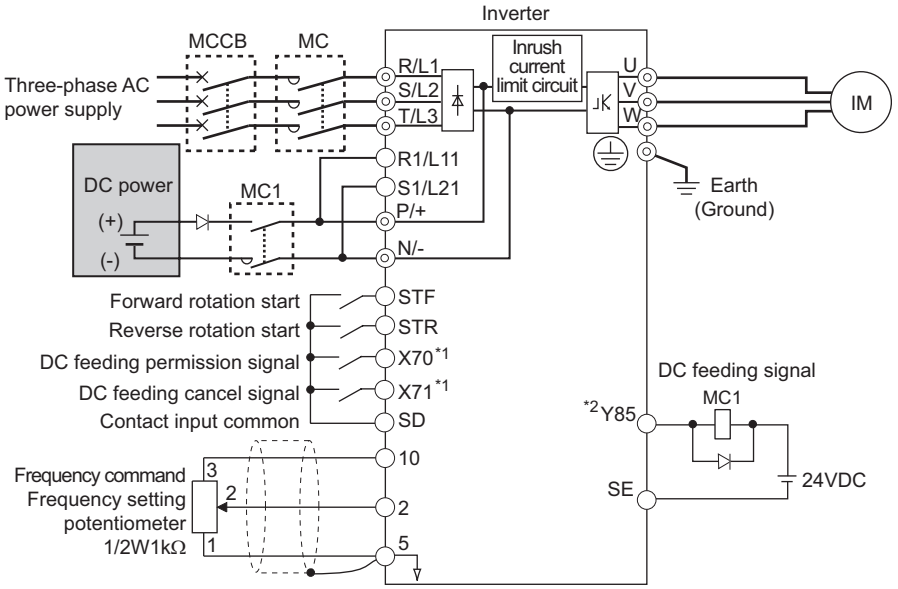

*1 Assign the function using *Pr. 178 to Pr. 189 (input terminal function selection)*.

*2 Assign the function using *Pr. 190 to Pr. 196 (output terminal function selection)*.

· Operation example 1 at power failure

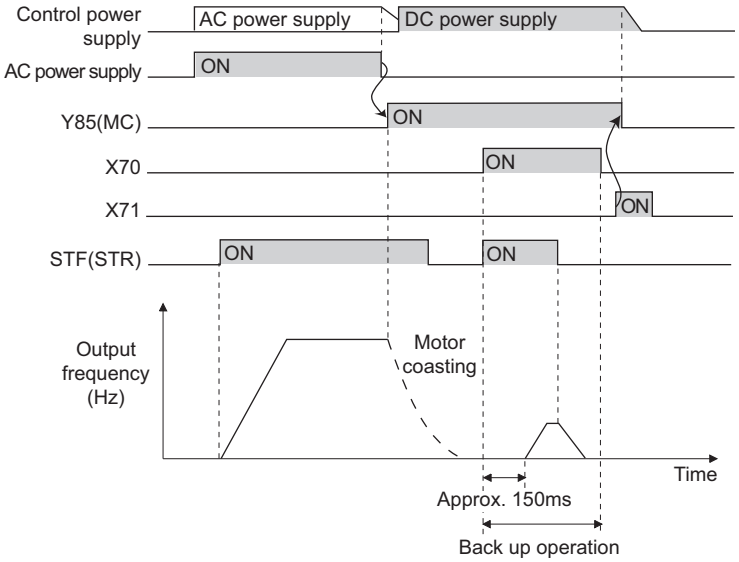

· Operation example 2 at power failure (when DC power is restored)

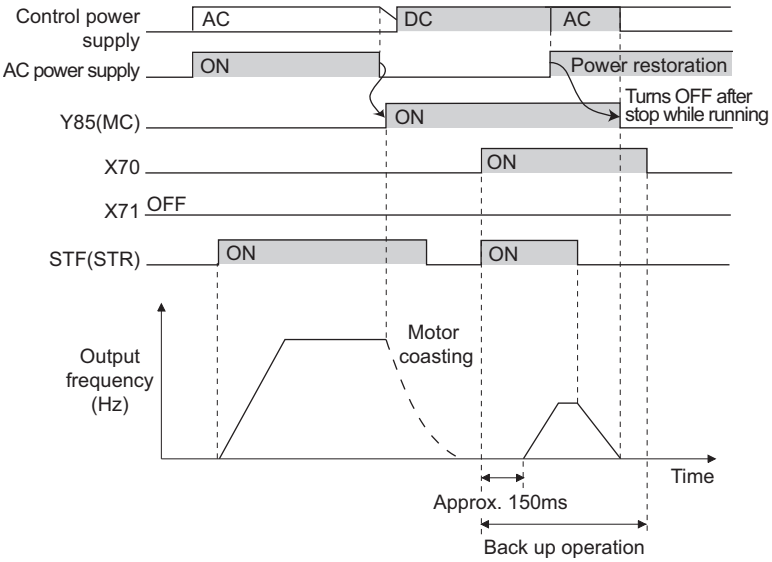

· Operation example 3 at power failure (when continuous operation is performed)

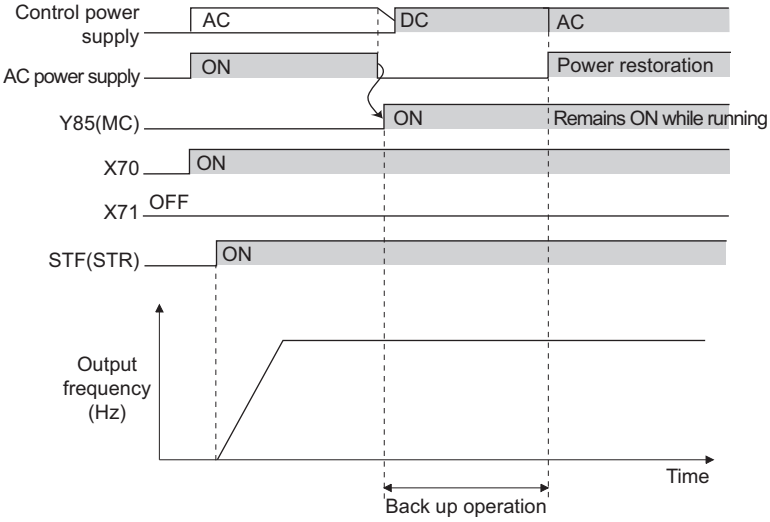

(6) Power supply specification at DC feeding

200V class	Rated input DC voltage	283VDC to 339VDC
	Permissible fluctuation	240VDC to 373VDC
400V class	Rated input DC voltage	537VDC to 679VDC
	Permissible fluctuation	457VDC to 740VDC

CAUTION

- As voltage between P/+ and N/- becomes 415VDC (830VDC) or more temporarily at regeneration, make selection of DC power supply carefully.

(7) Regenerative brake duty alarm output and alarm signal (RBP signal) (FR-F720-03160 (FR-F740-01800) or more)

100%: regenerative overvoltage protection operation value

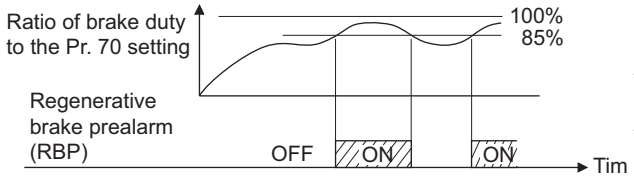

- [RB] appears on the operation panel and an alarm signal (RBP) is output when 85% of the regenerative brake duty set in *Pr. 70* is reached. If the regenerative brake duty reaches 100% of the *Pr. 70* setting, a regenerative overvoltage (E.OV1 to E.OV3) occurs.
- The inverter does not shut off the output when the alarm signal is output.
- For the terminal used for the RBP signal output, assign the function by setting "7" (positive logic) or "107" (negative logic) in any of *Pr. 190 to Pr. 196 (output terminal function selection)*.

REMARKS

- The MRS signal can also be used instead of the X10 signal. *(Refer to page 122.)*
- Refer to *pages 36 to 44* for connection of the brake unit, high power factor converter (FR-HC, MT-HC) and power regeneration common converter (FR-CV).
- When AC power is connected to terminal R/L1, S/L2, T/L3 during DC feeding with "2, 10 or 11" (DC feeding) set in *Pr. 30*, an option alarm (E.OPT) occurs.
- When DC feeding operation is performed with "2, 10, 11, 20, 21, 120 or 121" (DC feeding) set in *Pr. 30*, undervoltage protection (E.UVT) and instantaneous power failure (E.IPF) are not detected.

CAUTION

- Changing the terminal assignment using *Pr. 178 to Pr. 189 (input terminal function selection)* may affect the other functions. Please set parameters after confirming the function of each terminal.

(8) Reset selection at main circuit power ON (Pr. 30)

At initial status, inverter resets at main circuit power ON when using separated power source for main circuit (R, S, T) and control circuit (R1, S1). With this parameter, you can select to perform inverter reset or not at main circuit power ON.

- *Pr. 30* = "0, 1, 20, 21" ..... With inverter reset (Settings of "20 and 21" are for power failure)
- *Pr. 30* = "100, 101, 120, 121" ..... Without inverter reset

* Settings of *Pr. 30* = "2 (for FR-HC, MT-HC and FR-CV), 10 and 11(for DC feeding mode 1)" are for DC power supply, and therefore reset selection is not available.

⚠ WARNING

⚠ The value set in *Pr. 70* must not exceed the setting of the brake resistor used.
Otherwise, the resistor can overheat.

♦ Parameters referred to ♦

Pr. 57 Restart coasting time ☞ *Refer to page 152*
Pr. 178 to Pr.189 (input terminal function selection) ☞ *Refer to page 122*
Pr. 190 to Pr.196 (output terminal function selection) ☞ *Refer to page 128*
Pr. 261 Power failure stop selection ☞ *Refer to page 156*

4.9.3 Stop selection (Pr. 250)

Used to select the stopping method (deceleration to a stop or coasting) when the start signal turns OFF. Used to stop the motor with a mechanical brake, etc. together with switching OFF of the start signal.
You can also select the operations of the start signals (STF/STR). (Refer to *page 126* for start signal selection)

Parameter Number	Name	Initial Value	Setting Range	Description	
				Start Signal (STF/STR) *(Refer to page 126)*	Stop Operation
250	Stop selection	9999	0 to 100s	STF signal: Forward rotation start STR signal: Reverse rotation start	The motor is coasted to a stop when the preset time elapses after the start signal is turned OFF. The motor is coasted to a stop (*Pr. 250* - 1000)s after the start signal is turned OFF.
			1000s to 1100s	STF signal: Start signal STR signal: Forward/ reverse signal	
			9999	STF signal: Forward rotation start STR signal: Reverse rotation start	When the start signal is turned OFF, the motor decelerates to stop.
			8888	STF signal: Start signal STR signal: Forward/ reverse signal	

The above parameters can be set when *Pr. 160 User group read selection* = "0". *(Refer to page 190)*

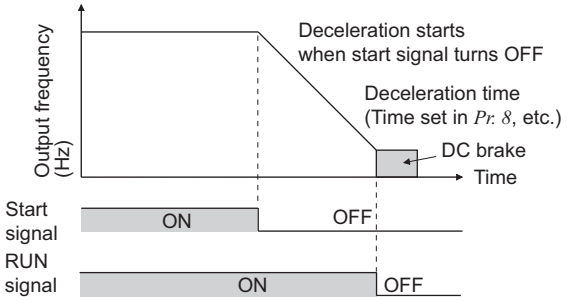

(1) Decelerate the motor to a stop

- Set *Pr. 250* to "9999" (initial value) or "8888".
- The motor decelerates to a stop when the start signal (STF/STR) turns OFF.

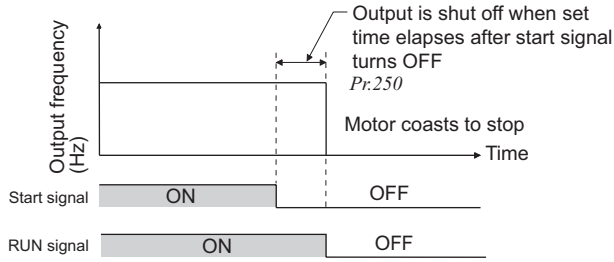

(2) Coast the motor to a stop.

- Use *Pr. 250* to set the time from when the start signal turns OFF until the output is shut off. When any of "1000" to "1100" is set, the output is shut off after (*Pr. 250* – 1000)s.
- The output is shut off when the time set in *Pr. 250* has elapsed after the start signal had turned OFF. The motor coasts to a stop.
- The RUN signal turns OFF when the output stops.

REMARKS

Stop selection is invalid when the following functions are activated.
- Power failure stop function *(Pr. 261)*
- PU stop *(Pr. 75)*
- Deceleration stop because of communication error *(Pr. 502)*
- Emergency stop by LonWorks communication

When setting of *Pr. 250* is not 9999 nor 8888, acceleration/deceleration is performed according to the frequency command, until start signal is OFF and output is shutoff.

CAUTION

- When the start signal is turned ON again during motor coasting, the motor starts at *Pr. 13 Starting frequency*.

♦ Parameters referred to ♦

Pr. 7 Acceleration time , Pr. 8 Deceleration time ☞ *Refer to page 101*
Pr. 13 Starting frequency ☞ *Refer to page 104*

4.9.4 Output stop function (Pr. 522)

The motor coasts to a stop (inverter output shutoff) when inverter output frequency falls to *Pr. 522* setting or lower.

Parameter Number	Name	Initial Value	Setting Range	Description
522 Ver.UP	Output stop frequency	9999	0 to 400Hz	Set the frequency to start coasting to a stop (output shutoff).
			9999	No function

The above parameters can be set when *Pr. 160 User group read selection* = "0". *(Refer to page 190)*

Ver.UP ....Specifications differ according to the date assembled. *Refer to page 400* to check the SERIAL number.

- When both of the frequency setting signal and output frequency falls to the frequency set in *Pr. 522* or lower, the inverter stops the output and the motor coasts to a stop.
- After a stop, the inverter output re-starts when the frequency signal is set higher than *Pr.522* + 2Hz. The motor re-accelerates at the *Pr.13 Starting frequency*.

Example of when target frequency>*Pr.522*+2Hz, and start signal is ON/OFF

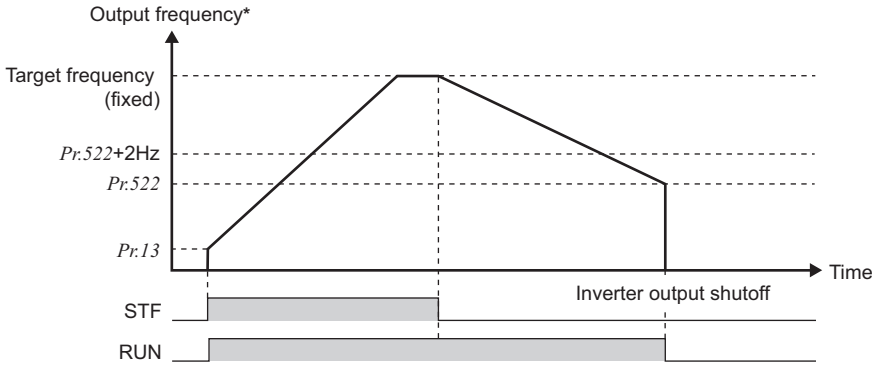

* The output frequency before the slip compensation is compared with the *Pr.522* setting.

Example of: target frequency = analog input command, start signal always ON

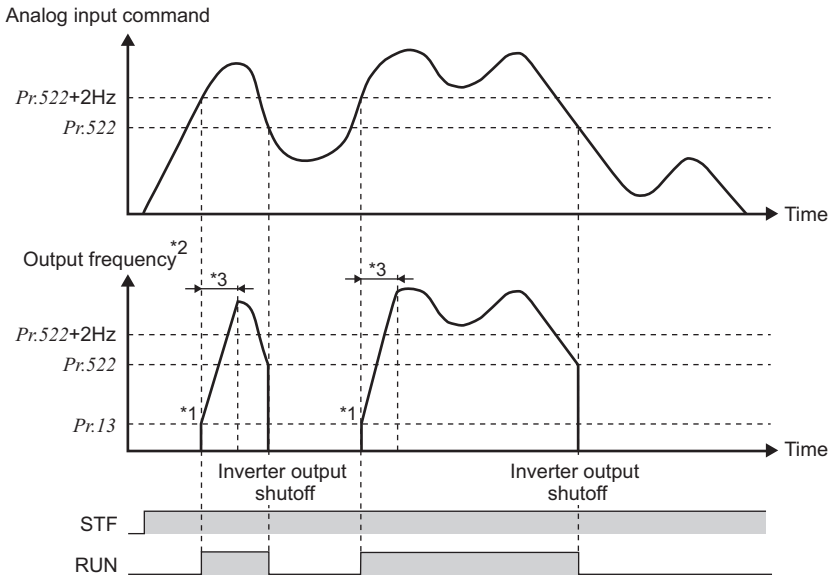

*1 After a stop, inverter re-starts accelerating at *Pr.13 Starting frequency*.

*2 The output frequency before the slip compensation is compared with the *Pr.522* setting.

*3 Steepness of the slope depends on the acceleration/deceleration time settings such as *Pr.7*.

REMARKS

- When *Pr. 522* ≠ "9999", output stop function disables DC injection brake operation, so the motor coasts to a stop when the output frequency falls to *Pr. 522* or lower. Re-acceleration during coasting may cause an inverter trip depending on the parameter setting.
- Output stop function is disabled during PID control, JOG operation, and power failure stop.
- Output stop function does not operate during reverse rotation deceleration. However, when the frequency setting signal and output frequency falls to *Pr. 522* or lower, the inverter coasts to a stop.
- During the output stop due to the output stop function (when forward/reverse command is given, but frequency command is not given), FWD/REV LED indication on the operation panel flickers fast.

♦ Parameters referred to ♦

Pr. 10 DC injection brake operation frequency , Pr. 11 DC injection brake operation time , Pr. 12 DC injection brake operation voltage ☞ *Refer to page 112*
Pr. 13 Starting frequency ☞ *Refer to page 104*

4.10 Function assignment of external terminal and control

Purpose	Parameter That Must be Set		Refer to Page
Assign function to input terminal	**Input terminal function selection**	**Pr. 178 to Pr. 189**	122
Set MRS signal (output shutoff) to NC contact specification	**MRS input selection**	**Pr. 17**	124
Make the second function valid only during constant speed operation.	**RT signal function validity condition selection**	**Pr. 155**	125
Assign start signal and forward/ reverse command to other signals	**Start signal (STF/STR) operation selection**	**Pr. 250**	126
Assign function to output terminal	**Output terminal function assignment**	**Pr. 190 to Pr. 196**	128
Detect output frequency.	**Up-to-frequency sensitivity Output frequency detection Speed detection hysteresis**	**Pr. 41 to Pr. 43, Pr. 50, Pr. 870**	133
Detect output current.	**Output current detection Zero current detection**	**Pr. 150 to Pr. 153, Pr. 166, Pr. 167**	135
Remote output function	**Remote output**	**Pr. 495 to Pr. 497**	137
Detect specified output power	**Pulse train output of output power**	**Pr. 799**	138

4.10.1 Input terminal function selection (Pr. 178 to Pr. 189)

Use these parameters to select/change the input terminal functions.

Parameter Number	Name	Initial Value	Initial Signal	Setting Range
178 Ver.UP	**STF terminal function selection**	60	STF (forward rotation command)	0 to 8, 10 to 14, 16, 24, 25, 50, 51, 60, 62, 64 to 67, 70 to 72, 77, 78, 9999
179 Ver.UP	**STR terminal function selection**	61	STR (reverse rotation command)	0 to 8, 10 to 14, 16, 24, 25, 50, 51, 61, 62, 64 to 67, 70 to 72, 77, 78, 9999
180 Ver.UP	**RL terminal function selection**	0	RL (low-speed operation command)	0 to 8, 10 to 14, 16, 24, 25, 50, 51, 62, 64 to 67, 70 to 72, 77, 78, 9999
181 Ver.UP	**RM terminal function selection**	1	RM (middle-speed operation command)	
182 Ver.UP	**RH terminal function selection**	2	RH (high speed operation command)	
183 Ver.UP	**RT terminal function selection**	3	RT (second function selection)	
184 Ver.UP	**AU terminal function selection**	4	AU (terminal 4 input selection)	0 to 8, 10 to 14, 16, 24, 25, 50, 51, 62 to 67, 70 to 72, 77, 78, 9999
185 Ver.UP	**JOG terminal function selection**	5	JOG (Jog operation selection)	0 to 8, 10 to 14, 16, 24, 25, 50, 51, 62, 64 to 67, 70 to 72, 77, 78, 9999
186 Ver.UP	**CS terminal function selection**	6	CS (selection of automatic restart after instantaneous power failure)	
187 Ver.UP	**MRS terminal function selection**	24	MRS (output stop)	
188 Ver.UP	**STOP terminal function selection**	25	STOP (start self-holding selection)	
189 Ver.UP	**RES terminal function selection**	62	RES (inverter reset)	

The above parameters can be set when *Pr. 160 User group read selection* = "0". *(Refer to page 190)*

Ver.UP .... Specifications differ according to the date assembled. *Refer to page 400* to check the SERIAL number.

(1) Input terminal function assignment

- Use *Pr. 178 to Pr. 189* to set the functions of the input terminals.
- Refer to the following table and set the parameters:

Setting	Signal Name	Function		Related Parameters	Refer to Page
0	RL	*Pr. 59* = 0 (initial value)	Low-speed operation command	Pr. 4 to Pr. 6, Pr. 24 to Pr. 27, Pr. 232 to Pr. 239	93
		Pr. 59 ≠ 0 *1	Remote setting (setting clear)	Pr. 59	98

Setting	Signal Name	Function		Related Parameters	Refer to Page
1	RM	*Pr. 59* = 0 (initial value)	Middle-speed operation command	Pr. 4 to Pr. 6, Pr. 24 to Pr. 27, Pr. 232 to Pr. 239	93
		Pr. 59 ≠ 0 *1	Remote setting (deceleration)	Pr. 59	98
2	RH	*Pr. 59* = 0 (initial value)	High-speed operation command	Pr. 4 to Pr. 6, Pr. 24 to Pr. 27, Pr. 232 to Pr. 239	93
		Pr. 59 ≠ 0 *1	Remote setting (acceleration)	Pr. 59	98
3	RT	Second function selection		Pr. 44 to Pr. 51	125
4	AU	Terminal 4 input selection		Pr. 267	171
5	JOG	Jog operation selection		Pr. 15, Pr. 16	95
6	CS	Selection of automatic restart after instantaneous power failure, flying start		Pr. 57, Pr. 58, Pr.162 to Pr.165, Pr. 299, Pr. 611	152
		Electronic bypass function		Pr. 57, Pr. 58 Pr. 135 to Pr. 139, Pr. 159	293
7	OH	External thermal relay input *2		Pr. 9	107
8	REX	15-speed selection (combination with three speeds RL, RM, RH)		Pr. 4 to Pr. 6, Pr. 24 to Pr. 27, Pr.232 to Pr.239	93
10	X10	Inverter run enable signal (FR-HC, MT-HC, FR-CV connection)		Pr. 30	114
11	X11	FR-HC or MT-HC connection, instantaneous power failure detection		Pr. 30	114
12	X12	PU operation external interlock		Pr. 79	195
13	X13	External DC injection brake operation start		Pr. 11, Pr. 12	112
14	X14	PID control valid terminal		Pr. 127 to Pr. 134, Pr. 575 to Pr. 577	261
16	X16	PU/External operation switchover (turning ON X16 selects External operation)		Pr. 79, Pr. 340	201
24	MRS	Output stop		Pr. 17	124
		Electronic bypass function		Pr. 57, Pr. 58, Pr. 135 to Pr. 139, Pr. 159	293
25	STOP	Start self-holding selection		—	126
50	SQ	Sequence start		Pr. 414, Pr. 415, Pr. 498, Pr. 506 to Pr. 515	260
51	X51	Fault clear signal		—	332
60	STF	Forward rotation command (assigned to STF terminal *(Pr. 178)* only)		—	126
61	STR	Reverse rotation command (assigned to STR terminal *(Pr. 179)* only)		—	126
62	RES	Inverter reset		—	—
63	PTC	PTC thermistor input (assigned to AU terminal *(Pr. 184)* only)		Pr. 9	107
64	X64	PID forward/reverse action switchover		Pr. 127 to Pr. 134	261
65	X65	PU/NET operation switchover (turning ON X65 selects PU operation)		Pr. 79, Pr. 340	203
66	X66	External/NET operation switchover (turning ON X66 selects NET operation)		Pr. 79, Pr. 340	203
67	X67	Command source switchover (*Pr.338* and *Pr.339* commands are valid when X67 turns ON)		Pr. 338, Pr. 339	204
70	X70	DC feeding operation permission		Pr. 30, Pr. 70	114
71	X71	DC feeding cancel		Pr. 30, Pr. 70	114
72	X72	PID integral value reset		Pr. 127 to Pr. 134, Pr. 241, Pr. 553, Pr. 554, Pr. 575 to Pr. 577, C42 to C45	261
77	X77	Pre-charge end command		Pr. 127 to Pr. 130, Pr. 133, Pr. 134, Pr. 760 to Pr. 764	275
78	X78	Second pre-charge end command		Pr. 753 to Pr. 758, Pr. 765 to Pr. 769	275
9999	—	No function		—	—

*1 When *Pr. 59 Remote function selection* ≠ "0", the functions of the RL, RM and RH signals change as listed above.
*2 The OH signal turns ON when the relay contact "opens".

REMARKS

- Same function can be assigned to two or more terminals. In this case, the logic of terminal input is OR.
- The priorities of the speed commands are in order of jog > multi-speed setting (RH, RM, RL, REX) > PID (X14).
- When the X10 signal (FR-HC, MT-HC, FR-CV connection - inverter operation enable signal) is not set or when the PU operation external interlock (X12) signal is not assigned at the *Pr. 79 Operation mode selection* setting of "7", the MRS signal shares this function.
- Same signal is used to assign multi-speeds (7 speeds) and remote setting. They cannot be set individually.
  (Same signal is used since multi-speed (7 speeds) setting and remote setting are not used to set speed at the same time .)

CAUTION

- Changing the terminal assignment using *Pr. 178 to Pr. 189 (input terminal function selection)* may affect the other functions. Also check that wiring is correct, since the terminal name and the signal function became different. Please set parameters after confirming the function of each terminal.

(2) Response time of each signal

· The response time of the X10 signal is within 2ms. However, when the X10 signal is not assigned at the *Pr. 30 Regenerative function selection* setting of "2" (FR-HC/MT-HC/FR-CV connection), the response time of the MRS signal is within 2ms.
Pr. 17 MRS input selection is invalid.

Pr. 30 Setting	MRS Assignment	X10 Assignment	Response Time		*Pr. 17*
			MRS	X10	
2	○	×	Within 2ms	—	Invalid
	×	○	—	Within 2ms	—
	○	○	Within 20ms	Within 2ms	Valid
Other than 2	○	×	Within 20ms	—	Valid
	×	○	—	—	—
	○	○	Within 20ms	—	Valid

4.10.2 Inverter output shutoff signal (MRS signal, Pr. 17)

The inverter output can be shut off from the MRS signal. The logic of the MRS signal can also be selected.

Parameter Number	Name	Initial Value	Setting Range	Description
17	MRS input selection	0	0	Open input always
			2	Close input always (NC contact input specifications)

The above parameters can be set when *Pr. 160 User group read selection* = "0". *(Refer to page 190)*

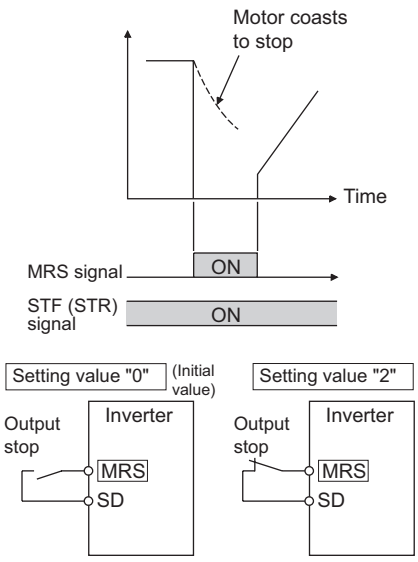

(1) Output shutoff signal (MRS signal)

· Turning ON the output shutoff signal (MRS) during inverter running shuts off the output immediately.
· Terminal MRS may be used as described below.

(a) When mechanical brake (e.g. electromagnetic brake) is used to stop motor
The inverter output is shut off when the mechanical brake operates.

(b) To provide interlock to disable operation by the inverter
With the MRS signal ON, the inverter cannot be operated if the start signal is entered into the inverter.

(c) Coast the motor to a stop.
When the start signal is turned OFF, the inverter decelerates the motor to a stop in the preset deceleration time, but when the MRS signal is turned ON, the motor coasts to a stop.

(2) MRS signal logic inversion *(Pr. 17)*

· When *Pr. 17* is set to "2", the MRS signal (output stop) can be changed to the normally closed (NC contact) input specification. When the MRS signal turns ON (opens), the inverter shuts off the output.

REMARKS

· The MRS signal is assigned to the terminal MRS in the initial setting. By setting "24" in either *Pr. 178 to Pr. 189 (input terminal function selection)*, the RT signal can be assigned to the other terminal.
· When using an external terminal to input the MRS signal, the MRS signal shuts off the output in any of the operation modes.

CAUTION

· Changing the terminal assignment using *Pr. 178 to Pr. 189 (input terminal function selection)* may affect the other functions. Please set parameters after confirming the function of each terminal.

♦ Parameters referred to ♦

Pr. 178 to Pr. 189 (Input terminal function selection) ☞ *Refer to page 122*

4.10.3 Condition selection of function validity by the second function selection signal (RT) (RT signal, Pr. 155)

You can select the second function using the external terminal (RT signal).
You can also set the RT signal operation condition (reflection time).

Parameter Number	Name	Initial Value	Setting Range	Description
155	RT signal function validity condition selection	0	0	Second function is immediately valid with ON of the RT signal.
			10	Second function is valid only during the RT signal is ON and constant speed operation. (invalid during acceleration/deceleration)

The above parameters can be set when *Pr. 160 User group read selection* = "0". *(Refer to page 190)*

- When the RT signal turns ON, the second function becomes valid.
- The second function has the following applications.
  (a) Switching between normal use and emergency use
  (b) Switching between heavy load and light load
  (c) Changing of acceleration/deceleration time by broken line acceleration/deceleration
  (d) Switching of characteristic between main motor and sub motor

Second function connection diagram

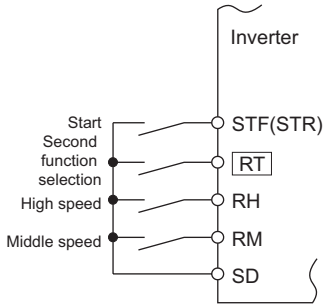

Second acceleration/deceleration time example

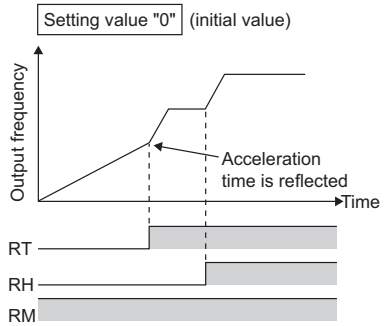

- When the RT signal is ON, the following second functions are selected at the same time.

Function	First Function Parameter Number	Second Function Parameter Number	Refer to Page
Torque boost	Pr. 0	Pr. 46	78
Base Frequency	Pr. 3	Pr. 47	89
Acceleration time	Pr. 7	Pr. 44	101
Deceleration time	Pr. 8	Pr. 44, Pr. 45	101
Electronic thermal relay function	Pr. 9	Pr. 51	107
Stall prevention	Pr. 22	Pr. 48, Pr. 49	81
Output frequency detection	Pr. 42(Pr. 43)	Pr. 50	133
PID control	Pr. 127 to Pr. 130, Pr. 133, Pr. 134, Pr. 760 to Pr. 764	Pr. 753 to Pr. 758, Pr. 765 to Pr. 769	261

REMARKS

- The RT signal is assigned to the RT terminal in the initial setting. By setting "3" in any of *Pr. 178 to Pr. 189 (input terminal function selection)*, the RT signal can be assigned to the other terminal.

CAUTION

- Changing the terminal assignment using *Pr. 178 to Pr. 189 (input terminal function selection)* may affect the other functions. Please set parameters after confirming the function of each terminal.

♦ Parameters referred to ♦

Pr. 178 to Pr.189 (input terminal function selection) ☞ *Refer to page 122*

4.10.4 Start signal selection (STF, STR, STOP signal, Pr. 250)

You can select the operation of the start signal (STF/STR).
Used to select the stopping method (deceleration to a stop or coasting) when the start signal turns OFF.
Used to stop the motor with a mechanical brake, etc. together with switching OFF of the start signal.
(Refer to *page 119* for stop selection)

Parameter Number	Name	Initial Value	Setting Range	Description	
				Start Signal (STF/STR)	Stop Operation *(Refer to page 119)*
250	Stop selection	9999	0 to 100s	STF signal: Forward rotation start STR signal: Reverse rotation start	The motor is coasted to a stop when the preset time elapses after the start signal is turned OFF. When the setting is any of 1000s to 1100s, the inverter coasts to a stop in (*Pr. 250* - 1000)s.
			1000s to 1100s	STF signal: Start signal STR signal: Forward/reverse rotation signal	
			9999	STF signal: Forward rotation start STR signal: Reverse rotation start	When the start signal is turned OFF, the motor decelerates to stop.
			8888	STF signal: Start signal STR signal: Forward/reverse rotation signal	

The above parameters can be set when *Pr. 160 User group read selection* = "0". *(Refer to page 190)*

(1) 2-wire type (STF, STR signal)

- A two-wire type connection is shown below.
- In the initial setting, the forward/reverse rotation signals (STF/STR) are used as start and stop signals. Turn ON either of the forward and reverse rotation signals to start the motor in the corresponding direction. If both are turned OFF (or ON) during operation, the inverter decelerates to a stop.
- The speed setting signal may either be given by entering 0 to 10VDC across the speed setting input terminal 2 and 5, by setting the required values in *Pr. 4 to Pr. 6 Multi-speed setting (high, middle, low speeds)*, etc. (For multi-speed operation, refer to *page 93*)
- When *Pr. 250* is set in any of "1000 to 1100, 8888", the STF signal becomes a start command and the STR signal a forward/reverse command.

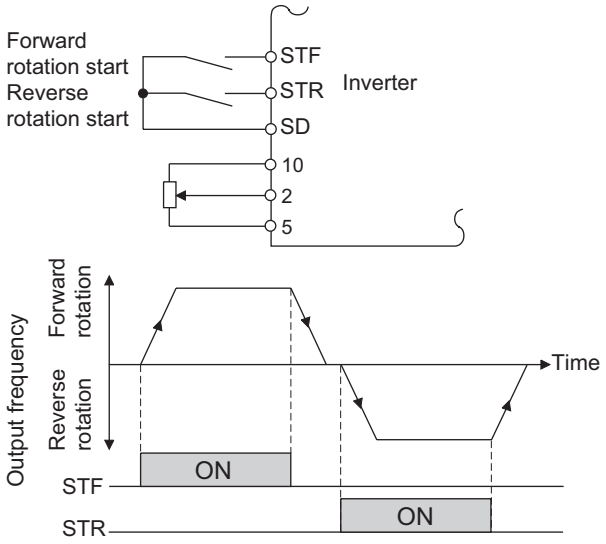

2-wire connection example (*Pr. 250* = "9999")

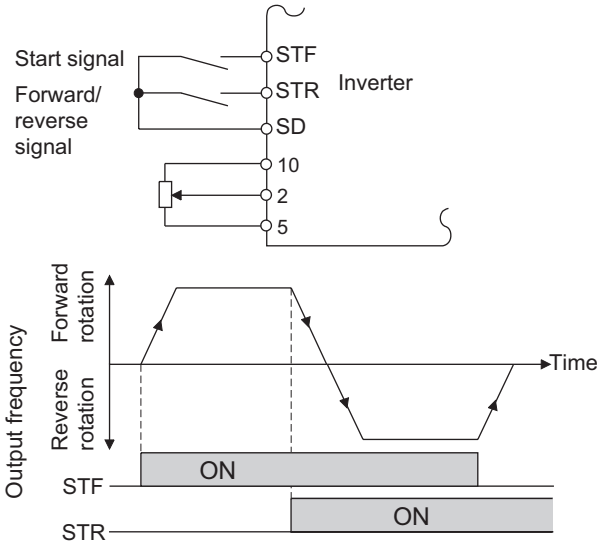

2-wire connection example (*Pr. 250* = "8888")

REMARKS

- When *Pr. 250* is set in any of "0 to 100, 1000 to 1100", the motor coasts to a stop if the start command is turned OFF. *(Refer to page 119)*
- The STF and STR signals are assigned to the STF and STR terminals in the initial setting. The STF signal can be assigned to *Pr. 178 STF terminal function selection* and the STR signal to *Pr. 179 STR terminal function selection* only.

(2) 3-wire type (STF, STR, STOP signal)

- A 3-wire type connection is shown below.
- The start self-holding selection becomes valid when the STOP signal is turned ON. In this case, the forward/reverse rotation signal functions only as a start signal.
- If the start signal (STF or STR) is turned ON and then OFF, the start signal is held and makes a start. When changing the direction of rotation, turn STR (STF) ON once and then OFF.
- To stop the inverter, turning OFF the STOP signal once decelerates it to a stop.

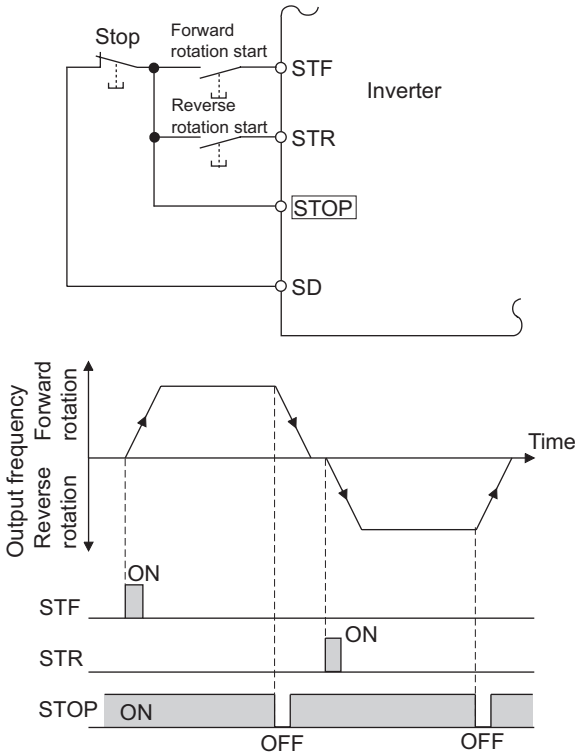

3-Wire Type Connection Example (*Pr. 250* ="9999")

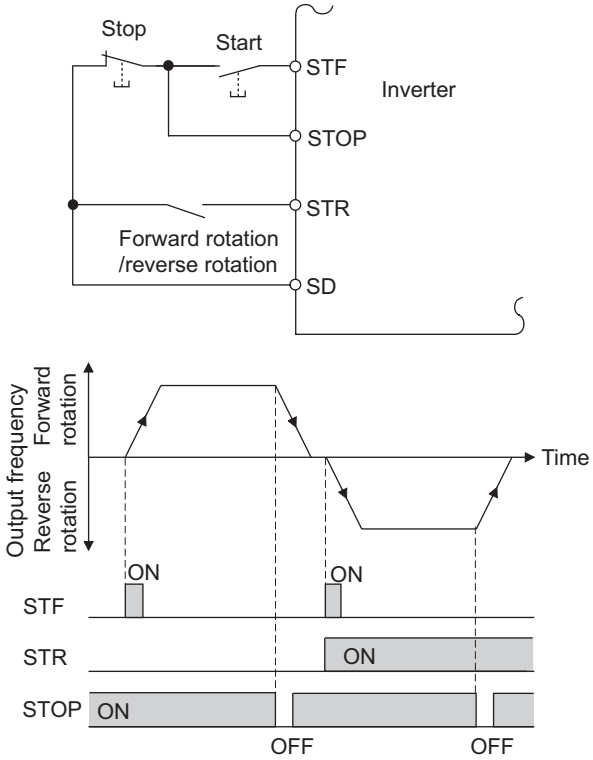

3-Wire Type Connection Example (*Pr. 250* ="8888")

REMARKS

- The STOP signal is assigned to the terminal STOP in the initial setting. By setting "25" in *Pr. 178 to Pr. 189*, the STOP signal can also be assigned to the other terminal.
- When the JOG signal is turned ON to enable jog operation, the STOP signal becomes invalid.
- If the MRS signal is turned ON to stop the output, the self-holding function is not canceled.

(3) Start signal selection

STF	STR	*Pr. 250* Setting Inverter Status	
		0 to 100s, 9999	1000s to 1100s, 8888
OFF	OFF	Stop	Stop
OFF	ON	Reverse rotation	
ON	OFF	Forward rotation	Forward rotation
ON	ON	Stop	Reverse rotation

♦ Parameters referred to ♦

Pr. 4 to Pr. 6 (Multi-speed setting) ☞ *Refer to page 93*
Pr. 178 to Pr. 189 (Input terminal function selection) ☞ *Refer to page 122*

4.10.5 Output terminal function selection (Pr. 190 to Pr. 196)

You can change the functions of the open collector output terminal and relay output terminal.

Parameter Number	Name		Initial Value	Initial Signal	Setting Range
190 Ver.UP	RUN terminal function selection	Open collector output terminal	0	RUN (inverter running)	0 to 5, 7, 8, 10 to 19, 25, 26, 45 to 54, 64, 67, 70 to 79, 82, 85, 90 to 96, 98, 99, 100 to 105, 107, 108, 110 to 116, 125, 126, 145 to 154, 164, 167, 170, 179, 182, 185, 190 to 196, 198, 199, 9999
191 Ver.UP	SU terminal function selection		1	SU (up to frequency)	
192 Ver.UP	IPF terminal function selection		2	IPF (instantaneous power failure, undervoltage)	
193 Ver.UP	OL terminal function selection		3	OL (overload alarm)	
194 Ver.UP	FU terminal function selection		4	FU (output frequency detection)	
195 Ver.UP	ABC1 terminal function selection	Relay output terminal	99	ALM (fault output)	0 to 5, 7, 8, 10 to 19, 25, 26, 45 to 54, 64, 67, 70 to 79, 82, 85, 90, 91, 94 to 96, 98, 99, 100 to 105, 107, 108, 110 to 116, 125, 126, 145 to 154, 164, 167, 170, 179, 182, 185, 190, 191, 194 to 196, 198, 199, 9999
196 Ver.UP	ABC2 terminal function selection		9999	No function	

The above parameters can be set when *Pr. 160 User group read selection* = "0". *(Refer to page 190)*

Ver.UP … Specifications differ according to the date assembled. *Refer to page 400* to check the SERIAL number.

(1) Output signal list

- You can set the functions of the output terminals.
- Refer to the following table and set the parameters: (0 to 99: Positive logic, 100 to 199: Negative logic)

Setting		Signal Name	Function	Operation	Related Parameters	Refer to Page
Positive Logic	Negative Logic					
0	100	RUN	Inverter running	Output during operation when the inverter output frequency rises to or above *Pr. 13 Starting frequency*.	—	131
1	101	SU	Up to frequency *1	Output when the output frequency is reached to the set frequency.	Pr. 41	133
2	102	IPF	Instantaneous power failure/undervoltage	Output at occurrence of an instantaneous power failure or when undervoltage protection is activated.	Pr. 57	152
3	103	OL	Overload alarm	Output while stall prevention function is activated.	Pr. 22, Pr. 23, Pr. 66, Pr. 148, Pr. 149, Pr. 154	81
4	104	FU	Output frequency detection	Output when the output frequency reaches the frequency setting in *Pr. 42* (*Pr. 43* for reverse rotation).	Pr. 42, Pr. 43	133
5	105	FU2	Second output frequency detection	Output when the output frequency reaches the frequency setting in *Pr. 50*.	Pr. 50	133
7	107	RBP	Regenerative brake pre-alarm	Output when 85% of the regenerative brake duty set in *Pr. 70* is reached. Setting is available for the FR-F720-03160 (FR-F740-01800) or more.	Pr. 70	114
8	108	THP	Electronic thermal relay function prealarm	Output when the electronic thermal value reaches 85% of the trip level. (Electronic thermal relay function protection (E.THT/E.THM) activates, when the value reached 100%.)	Pr. 9	109
10	110	PU	PU operation mode	Output when the PU operation mode is selected.	Pr. 79	195
11	111	RY	Inverter operation ready	Output when the reset process is completed (when the inverter can be started by switching the start signal ON or while it is running) after powering ON the inverter.	—	131

Setting		Signal Name	Function	Operation	Related Parameters	Refer to Page
Positive Logic	Negative Logic					
12	112	Y12	Output current detection	Output when the output current is higher than the *Pr. 150* setting for longer than the time set in *Pr. 151*.	Pr. 150, Pr. 151	135
13	113	Y13	Zero current detection	Output when the output power is lower than the *Pr. 152* setting for longer than the time set in *Pr. 153*.	Pr. 152, Pr. 153	135
14	114	FDN	PID lower limit	Output when the feedback value falls below the lower limit of PID control.	Pr. 127 to Pr. 134, Pr. 575 to Pr. 577	261
15	115	FUP	PID upper limit	Output when the feedback value rises above the upper limit of PID control		
16	116	RL	PID forward/reverse rotation output	Output when forward rotation is performed in PID control.		
17	—	MC1	Electronic bypass MC1	Used when the bypass-inverter switchover function is used.	Pr. 135 to Pr. 139, Pr. 159	293
18	—	MC2	Electronic bypass MC2			
19	—	MC3	Electronic bypass MC3			
25	125	FAN	Fan fault output	Output at the time of a fan alarm.	Pr. 244	300
26	126	FIN	Heatsink overheat pre-alarm	Output when the heatsink temperature reaches about 85% of the heatsink overheat protection operation temperature.	—	340
45	145	RUN3	Inverter running and start command is ON	Output when the inverter is running and start command is ON.	—	131
46	146	Y46	During deceleration at occurrence of power failure	Output when the power failure-time deceleration function is executed. (retained until release)	Pr. 261 to Pr. 266	156
47	147	PID	During PID control activated	Output during PID control.	Pr. 127 to Pr. 134, Pr. 575 to Pr. 577	261
48	148	Y48	PID deviation limit	Output when the absolute value of deviation exceeds the limit value.	Pr. 127 to Pr. 134, Pr. 241, Pr. 553, Pr. 554, Pr. 575 to Pr. 577, C42 to C45	261
49	149	Y49	During pre-charge operation	Output during the pre-charge operation.	Pr. 127 to Pr. 134, Pr. 241, Pr. 553, Pr. 554, Pr. 575 to Pr. 577, Pr. 753 to Pr. 769, C42 to C45	261, 275
50	150	Y50	During second pre-charge operation			261, 275
51	151	Y51	Pre-charge time over	Output when the pre-charged time exceeds the time set in *Pr.764* or *Pr.769*.		261, 275
52	152	Y52	Second pre-charge time over			261, 275
53	153	Y53	Pre-charge level over	Output when the pre-charged amount exceeds the set level in *Pr.763* or *Pr.768*.		261, 275
54	154	Y54	Second pre-charge level over			261, 275
64	164	Y64	During retry	Output during retry processing.	Pr. 65 to Pr. 69	159
67	167	Y67	During power failure	Output during output shutoff due to power failure or under voltage.	Pr. 57	155
70	170	SLEEP	PID output interruption	Output when the PID output interruption function is executed.	Pr. 127 to Pr. 134, Pr. 575 to Pr. 577	261

Setting		Signal Name	Function	Operation	Related Parameters	Refer to Page
Positive Logic	Negative Logic					
71	—	RO1	Commercial-power supply side motor 1 connection RO1	Used when using advanced PID control (pump function).	Pr. 575 to Pr. 591	283
72	—	RO2	Commercial-power supply side motor 2 connection RO2			
73	—	RO3	Commercial-power supply side motor 3 connection RO3			
74	—	RO4	Commercial-power supply side motor 4 connection RO4			
75	—	RIO1	Inverter side motor 1 connection RIO1			
76	—	RIO2	Inverter side motor 2 connection RIO2			
77	—	RIO3	Inverter side motor 3 connection RIO3			
78	—	RIO4	Inverter side motor 4 connection RIO4			
79	179	Y79	Pulse train output of output power	Output in pulses every time the accumulated output power of the inverter reaches the *Pr.799* setting.	Pr. 799	138
82	182	Y82	BACnet binary output	Control of binary output from BACnet is available.	—	247
85	185	Y85	DC feeding	Output during power failure or under voltage of AC power.	Pr. 30, Pr. 70	114
90	190	Y90	Life alarm	Output when any of the control circuit capacitor, main circuit capacitor and inrush current limit circuit or the cooling fan approaches the end of its service life.	Pr. 255 to Pr. 259	301
91	191	Y91	Fault output 3 (power-OFF signal)	Output when a fault occurs due to the internal circuit failure of inverter wiring mistake.	—	132
92	192	Y92	Energy saving average value updated timing	Turned ON and OFF alternately every time the power saving average value is updated when the power saving monitor is used. Cannot be set to *Pr. 195 and Pr. 196* (relay output terminal).	Pr. 52, Pr. 54, Pr. 158, Pr. 891 to Pr. 899	164
93	193	Y93	Current average value monitor signal	Average current value and maintenance timer value are output as pulses. Cannot be set to *Pr. 195 and Pr. 196* (relay output terminal).	Pr. 555 to Pr. 557	305
94	194	ALM2	Fault output 2	Output when the fault occurs. Continues outputting the signal during inverter reset and stops outputting after reset is cancelled. *2	—	132
95	195	Y95	Maintenance timer signal	Output when *Pr. 503* rises to or above the *Pr. 504* setting.	Pr. 503, Pr. 504	304
96	196	REM	Remote output	Output to the terminal when a value is set to the parameter.	Pr. 495 to Pr. 497	137
98	198	LF	Alarm output	Output when an alarm (fan failure or communication error warning) occurs.	Pr. 121, Pr. 244	214, 300
99	199	ALM	Fault output	Output when the fault occurs. The signal output is stopped when the fault is reset.	—	132
9999		—	No function	—	—	—

*1 Note that when the frequency setting is varied using an analog signal or of the operation panel (FR-DU07), the output of the SU (up to frequency) signal may alternate ON and OFF depending on that varying speed and the timing of the varying speed due to acceleration/deceleration time setting. (The output will not alternate ON and OFF when the acceleration/deceleration time setting is "0s".)

*2 When a power supply reset is performed, the fault output 2 signal (ALM2) turns OFF as soon as the power supply switches OFF.

REMARKS

- The same function may be set to more than one terminal.
- When the function is executed, the terminal conducts at the setting of any of "0" to "99", and does not conduct at the setting of any of "100" to "199".
- When *Pr. 76 Fault code output selection* = "1", the output signals of the terminals SU, IPF, OL and FU are switched as set in *Pr. 76*. (When an inverter fault occurs, the signal output is switched to the fault code output.)
- The output assignment of the terminal RUN and fault output relay are as set above regardless of *Pr. 76*.

CAUTION

- Changing the terminal assignment using *Pr. 190 to Pr. 196 (output terminal function selection)* may affect the other functions. Please set parameters after confirming the function of each terminal.
- Do not assign signals which repeat frequent ON/OFF to A1 B1 C1, A2 B2 C2. Otherwise, the life of the relay contact decreases.

(2) Inverter operation ready signal (RY signal) and inverter running signal (RUN, RUN3 signal)

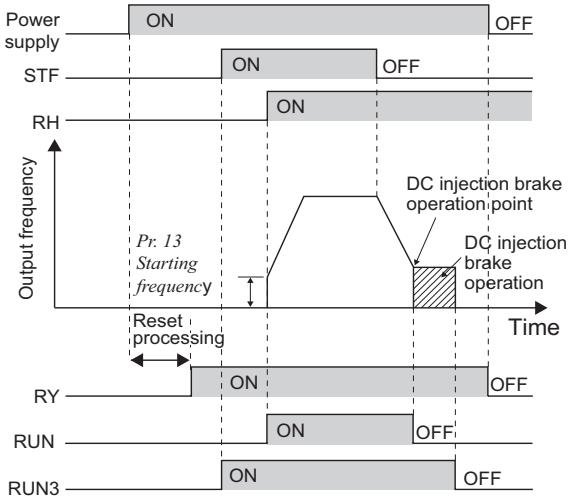

- When the inverter is ready to operate, the output of the operation ready signal (RY) is ON. It is also ON during inverter running.
- When the output frequency of the inverter rises to or above *Pr. 13 Starting frequency*, the output of the inverter running signal (RUN) is turned ON. During an inverter stop or DC injection brake operation, the output is OFF.
- The output of the RUN3 signal is ON when the inverter running and start signals are ON.
  (For the RUN3 signal, output is ON if the starting command is ON even when a fault occurs or the MRS signal is ON.
- When using the RY, RUN and RUN3 signals, assign functions to *Pr. 190 to Pr. 196 (output terminal selection function)* referring to the table below.

Output Signal	*Pr. 190 to Pr. 196* Setting	
	Positive logic	Negative logic
RY	11	111
RUN	0	100
RUN3	45	145

Inverter Status / Output Signal	Start Signal is OFF (during stop)	Start Signal is ON (during stop)	Start Signal is ON (during running)	Under DC Injection Brake	Output Shut Off *2		Automatic Restart after Instantaneous Power Failure		
							Coasting		Restarting
					Start signal is ON	Start signal is OFF	Start signal is ON	Start signal is OFF	
RY	ON	ON	ON	ON	OFF		ON *1		ON
RUN	OFF	OFF	ON	OFF	OFF		OFF		ON
RUN3	OFF	ON	ON	ON	ON	OFF	ON	OFF	ON

*1 This signal turns OFF during power failure or undervoltage.
*2 Output is shutoff in conditions like a fault and when the MRS signal is ON.

REMARKS

- RUN signal is assigned to the terminal RUN in the initial setting.

(3) Fault output signal (ALM, ALM2 signal)

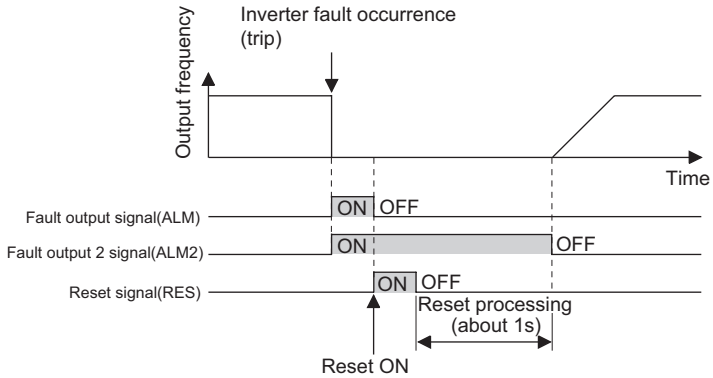

- If the inverter comes to trip, the ALM and ALM2 signals are output.
- The ALM2 signal remains ON during a reset period after fault occurrence.
- When using the ALM2 signal, set "94 (positive logic)" or "194 (negative logic)" to any of *Pr. 190 to Pr. 196 (output terminal function selection)* to assign the function to the output terminal.
- The ALM signal is assigned to the A1B1C1 contact in the initial setting.

REMARKS

Refer to page 334 for the inverter fault description.

(4) Input MC shutoff signal (Y91 signal)

- The Y91 signal is output at occurrence of a fault attributable to the failure of the inverter circuit or a fault caused by a wiring mistake.
- When using the Y91 signal, set "91 (positive logic)" or "191 (negative logic)" in any of *Pr. 190 to Pr. 196 (output terminal function selection)* to assign the function to the output terminal.
- The following table indicates the faults that will output the Y91 signal. (*Refer to page 334* for the fault description.)

Fault Definition
Inrush current limit circuit fault (E.IOH)
CPU fault (E.CPU)
CPU fault (E.6)
CPU fault (E.7)
Parameter storage device fault (E.PE)
Parameter storage device fault (E.PE2)
24VDC power output short circuit (E.P24)
Power supply short circuit for operation panel, power supply short circuit for RS-485 (E.CTE)
Output side earth(ground) fault overcurrent (E.GF)
Output phase loss (E.LF)
Brake transistor alarm detection/internal circuit error (E.BE)

♦ Parameters referred to ♦

Pr. 13 Starting frequency ☞ *Refer to page 104*

Pr. 76 Fault code output selection ☞ *Refer to page 161*

4.10.6 Detection of output frequency (SU, FU, FU2 signal, Pr. 41 to Pr. 43, Pr. 50, Pr. 870)

The inverter output frequency is detected and output to the output signal.

Parameter Number	Name	Initial Value	Setting Range	Description
41	**Up-to-frequency sensitivity**	10%	0 to 100%	Set the level where the SU signal turns ON.
42	**Output frequency detection**	6Hz	0 to 400Hz	Set the frequency where the FU signal turns ON.
43	**Output frequency detection for reverse rotation**	9999	0 to 400Hz	Set the frequency where the FU signal turns ON in reverse rotation.
			9999	Same as *Pr. 42* setting
50	**Second output frequency detection**	30Hz	0 to 400Hz	Set the frequency where the FU2 signal turns ON.
870 Ver.UP	**Speed detection hysteresis**	0Hz *	0 to 5Hz	Set the hysteresis width for the detected frequency.

The above parameters can be set when *Pr. 160 User group read selection* = "0". *(Refer to page 190)*

Ver.UP … Specifications differ according to the date assembled. *Refer to page 400* to check the SERIAL number.

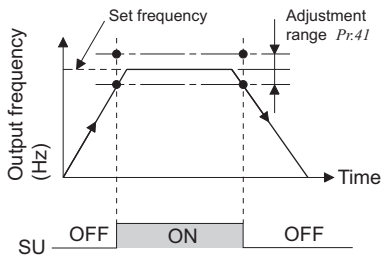

(1) Up-to-frequency sensitivity (SU signal, *Pr. 41*)

- When the output frequency reaches the set frequency, the up-to-frequency signal (SU) is output.
- The *Pr. 41* value can be adjusted within the range ±1% to ±100% on the assumption that the set frequency is 100%.
- This parameter can be used to ensure that the set frequency has been reached to provide the operation start signal etc. for related equipment.

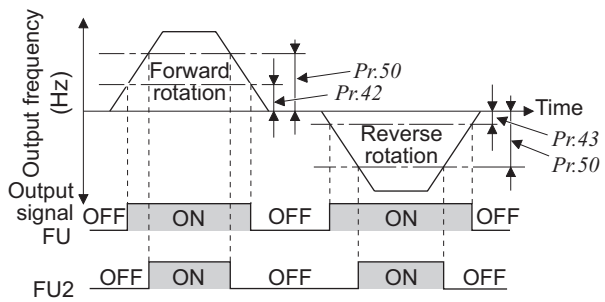

Parameter Number	Output Signals	*Pr. 190 to Pr. 196* Setting	
		Positive logic	Negative logic
42, 43	FU	4	104
50	FU2	5	105

(2) Output frequency detection (FU signal, FU2 signal, *Pr. 42, Pr. 43, Pr. 50*)

- When the output frequency rises to or above the *Pr. 42* setting, the output frequency detection signal (FU) is output.
- This function can be used for electromagnetic brake operation, open signal, etc.
- Frequency detection that is dedicated to reverse operation can be set by setting detection frequency to *Pr. 43*. This function is effective for switching the timing of electromagnetic brake operation between forward rotation (rise) and reverse rotation (fall) during vertical lift operation, etc.
- When *Pr. 43* ≠ "9999", the *Pr. 42* setting applies to forward rotation and the *Pr. 43* setting applies to reverse rotation.
- When outputting a frequency detection signal besides the FU signal, set the detection frequency in *Pr. 50*. The FU2 signal output when the output frequency reaches or exceeds the *Pr. 50* setting.
- For each signal, assign functions to *Pr. 190 to Pr. 196* (output terminal function selection) referring to the left table.

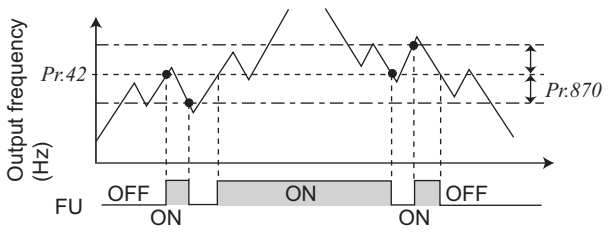

Example of output frequency detection signal (FU)

(3) Speed detection hysteresis *(Pr. 870)*

· This function prevents chattering of the speed detection signals.
When an output frequency fluctuates, the up to frequency signal (SU) and output frequency detection signals (FU, FU2) may repeat ON/OFF (chatters). Setting hysteresis to the detected frequency prevents chattering of these signals.

REMARKS

Setting a higher value to this parameter slows the response of frequency detection signals (SU, FU and FU2).

REMARKS

The output frequency compared with the set frequency changes depending on the control method.

Control Method	Compared Output Frequency
V/F control	Output frequency
Simple magnetic flux vector control	Output frequency before slip compensation

CAUTION

· Changing the terminal assignment using *Pr. 190 to Pr. 196 (output terminal function selection)* may affect the other functions. Please set parameters after confirming the function of each terminal.

♦ Parameters referred to ♦

Pr. 190 to Pr. 196 (output terminal function selection) ☞ *Refer to page 128*

4.10.7 Output current detection function (Y12 signal, Y13 signal, Pr. 150 to Pr. 153, Pr. 166, Pr. 167)

The output current during inverter running can be detected and output to the output terminal.

Parameter Number	Name	Initial Value	Setting Range	Description	
150	Output current detection level	110%*	0 to 120%*	Set the output current detection level. 100% is the rated inverter current.	
151	Output current detection signal delay time	0s	0 to 10s	Set the output current detection period. Set the time from when the output current has risen above the setting until the output current detection signal (Y12) is output.	
152	Zero current detection level	5%	0 to 150%	Set the zero current detection level. The rated inverter current is assumed to be 100%.	
153 Ver.UP	Zero current detection time	0.5s	0 to 10s	Set the time period from when the output current drops below the *Pr. 152* value until when the zero current detection signal (Y13) is output.	
166	Output current detection signal retention time	0.1s	0 to 10s	Set the retention time when the Y12 signal is ON.	
			9999	The Y12 signal ON status is retained. The signal is turned OFF at the next start.	
167 Ver.UP	Output current detection operation selection	0		Y12 Signal - ON	Y13 Signal - ON
			0	Operation continued	Operation continued
			1	Fault stop (E.CDO)	Operation continued
			10	Operation continued	Fault stop (E.CDO)
			11	Fault stop (E.CDO)	Fault stop (E.CDO)

The above parameters can be set when *Pr. 160 User group read selection* = "0". *(Refer to page 190)*

Ver.UP … Specifications differ according to the date assembled. *Refer to page 400* to check the SERIAL number.

* When *Pr. 570 Multiple rating setting* = "1", performing inverter reset and all parameter clear changes the initial value and setting range. *(Refer to page 86.)*

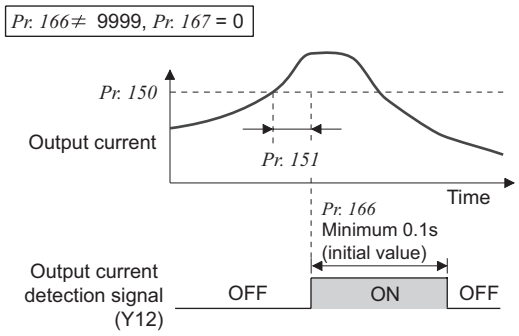

(1) Output current detection (Y12 signal, *Pr. 150, Pr. 151, Pr. 166, Pr. 167*)

- The output power detection function can be used for excessive torque detection, etc.
- If the output current remains higher than the *Pr. 150* setting during inverter operation for longer than the time set in *Pr. 151*, the output current detection signal (Y12) is output from the inverter's open collector or relay output terminal.
- When the Y12 signal turns ON, the ON state is held for the time set in *Pr. 166* .
- When *Pr. 166* = "9999", the ON state is held until a next start.
- At the *Pr. 167* setting of "1" or "11", the inverter output is stopped and the output current detection fault (E.CDO) is displayed when the Y12 signal turns ON. When a fault stop occurs, the Y12 signal is ON for the time set in *Pr. 166* at the *Pr. 166* setting of other than "9999", and remains ON until a reset is made at the *Pr. 166* setting of "9999". Setting *Pr. 167* = "1" or "11" at Y12 signal ON does not cause E.CDO. Setting to *Pr. 167* becomes effective after Y12 is turned OFF.
- For the X12 signal, set "12 (positive logic)" or "112 (negative logic)" in any of *Pr. 190 to Pr. 196 (output terminal function selection)* and assign the function to the output terminal.

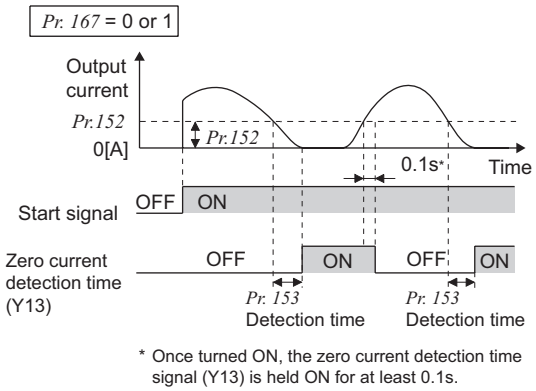

(2) Zero current detection (Y13 signal, *Pr. 152, Pr. 153, Pr. 167*)

- If the output current remains lower than the *Pr. 152* setting during inverter operation for longer than the time set in *Pr. 153*, the zero current detection (Y13) signal is output from the inverter's open collector or relay output terminal.
- When the inverter's output current falls to "0", torque will not be generated. This may cause a drop due to gravity when the inverter is used in vertical lift application. To prevent this, the output current zero signal (Y13) can be output from the inverter to close the mechanical brake when the output current has fallen to "0".
- When *Pr.167* = "10" or "11", turning Y13 signal ON stops the inverter output and causes output current detection fault (E.CDO) to be displayed. ON status of Y13 signal is held for 0.1s at the fault. Setting *Pr. 167* = "10" or "11" while Y13 signal is ON does not cause E.CDO. Setting to *Pr. 167* becomes effective after Y13 is turned OFF.
- For the Y13 signal, set "13 (positive logic)" or "113 (negative logic)" in any of *Pr. 190 to Pr. 196 (output terminal function selection)* to assign the function to the output terminal.

CAUTION

- The response time of Y12 and Y13 signals is approximately 0.1s. Note that the response time changes according to the load condition.
  When *Pr. 152* = "0", detection is disabled.
- Changing the terminal assignment using *Pr. 190 to Pr. 196 (output terminal function selection)* may affect the other functions. Please set parameters after confirming the function of each terminal.

⚠ CAUTION

⚠ The zero current detection level setting should not be too low, and the zero current detection time setting not too long. Otherwise, the detection signal may not be output when torque is not generated at a low output current.

⚠ To prevent the machine and equipment from resulting in hazardous conditions by use of the zero current detection signal, install a safety backup such as an emergency brake.

♦ Parameters referred to ♦

Pr. 190 to Pr. 196 (output terminal function selection) ☞ *Refer to page 128*

4.10.8 Remote output function (REM signal, Pr. 495 to Pr. 497)

You can utilize the ON/OFF of the inverter's output signals instead of the remote output terminal of the programmable controller.

Parameter Number	Name	Initial Value	Setting Range	Description	
495 Ver.UP	Remote output selection	0	0	Remote output data clear at powering OFF	Remote output data clear at inverter reset
			1	Remote output data retention even at powering OFF	
			10	Remote output data clear at powering OFF	Remote output data retention even at inverter reset
			11	Remote output data retention even at powering OFF	
496 *	Remote output data 1	0	0 to 4095	Refer to the following diagram.	
497 *	Remote output data 2	0	0 to 4095		

The above parameters can be set when *Pr. 160 User group read selection* = "0". *(Refer to page 190)*

Ver.UP … Specifications differ according to the date assembled. *Refer to page 400* to check the SERIAL number.

* The above parameters allow its setting to be changed during operation in any operation mode even if "0" (initial value) is set in *Pr. 77 Parameter write selection*.

<Remote output data>

Pr. 496

b11											b0
*1	*1	*1	*1	*1	ABC2	ABC1	FU	OL	IPF	SU	RUN

Pr. 497

b11											b0
*1	*1	RA3 *3	RA2 *3	RA1 *3	Y6 *2	Y5 *2	Y4 *2	Y3 *2	Y2 *2	Y1 *2	Y0 *2

*1 As desired
*2 Y0 to Y6 are available only when the extension output option (FR-A7AY) is fitted
*3 RA1 to RA3 are available only when the relay output option (FR-A7AR) is fitted

- The output terminal can be turned ON/OFF depending on the *Pr. 496* or *Pr. 497* setting. The remote output selection can be controlled ON/OFF by computer link communication from the PU connector or RS-485 port or by communication from the communication option.
- Set "96" (positive logic) or "196" (negative logic) in any of *Pr. 190 to Pr. 196 (output terminal function selection)*, and assign the remote output (REM) signal to the terminal used for remote output,
- When you refer to the left diagram and set 1 to the terminal bit (terminal where the REM signal has been assigned) of *Pr. 496* or *Pr. 497*, the output terminal turns ON (OFF for negative logic). By setting 0, the output terminal turns OFF (ON for negative logic).

Example)When "96" (positive logic) is set to *Pr. 190 RUN terminal function selection* and "1" (H01) is set to *Pr. 496*, the terminal RUN turns ON.

ON/OFF example for positive logic

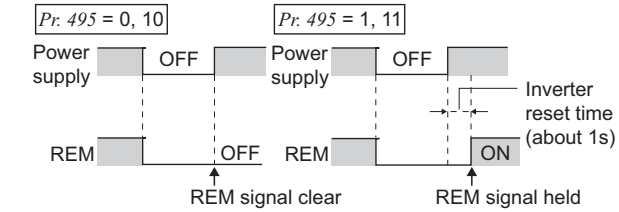

Signal condition during a reset

* When *Pr. 495* = "1," the signal condition saved in EEPROM (condition of the last power OFF) is applied.

- When *Pr. 495* = "0 (initial value), 10", performing a power supply reset (including a power failure) clears the REM signal output. (The ON/OFF status of the terminals are as set in *Pr. 190 to Pr. 196*.) The *Pr. 496* and *Pr. 497* settings are also "0".
  When *Pr. 495* = "1, 11", the remote output data before power supply-OFF is stored into the EEPROM, so the signal output at power recovery is the same as before power supply-OFF. However, it is not stored when the inverter is reset (terminal reset, reset request through communication).
  (See the chart on the left)
- When *Pr. 495* = "10, 11", the signal during reset is held even an inverter reset is made.

REMARKS

- The output terminal where the REM signal is not assigned using any of *Pr. 190* to *Pr. 196* does not turn ON/OFF if 0/1 is set to the terminal bit of *Pr. 496* or *Pr. 497*. (It turns ON/OFF with the assigned function.)

CAUTION

- When *Pr. 495*="1, 11"(remote output data retention at power OFF), connect R1/11 with P/+, and S1/L21 with N/- so that the control power is retained. If you do not take such a step, the output signals provided after power-ON are not guaranteed.

♦ Parameters referred to ♦

- *Pr. 190 to Pr. 196 (output terminal function selection)* ☞ *Refer to page 128*

4.10.9 Pulse train output of output power (Y79 signal, Pr. 799)

After power ON or inverter reset, output signal (Y79 signal) is output in pulses every time accumulated output power, which is counted after the *Pr.799 Pulse increment setting for output power* is set, reaches the specified value (or its integral multiples).

Parameter Number	Name	Initial Value	Setting Range	Description
799 Ver.UP	**Pulse increment setting for output power**	1kWh	0.1kWh, 1kWh, 10kWh, 100kWh, 1000kWh	Pulse train output of output power (Y79) is output in pulses at every output power (kWh) that is specified.

The above parameters can be set when *Pr. 160 User group read selection* = "0". *(Refer to page 190)*

Ver.UP ....Specifications differ according to the date assembled. *Refer to page 400* to check the SERIAL number.

(1) Pulse increment setting for output power (Y79 signal, *Pr.799*)

- After power ON or inverter reset, output signal (Y79 signal) is output in pulses every time accumulated output power of the inverter exceeds *Pr.799 Pulse increment setting for output power*.
- The inverter continues to count the output power at activation of retry function or at an automatic restart after instantaneous power failure (power failure that is too short to cause an inverter reset). It does not clear the output power.
- If power failure occurs, output power is counted from 0kWh again.
- Assign pulse output of output power (Y79: setting value 79 (positive logic), 179 (negative logic)) to any of *Pr.190 to Pr.196 (Output terminal function selection)*.

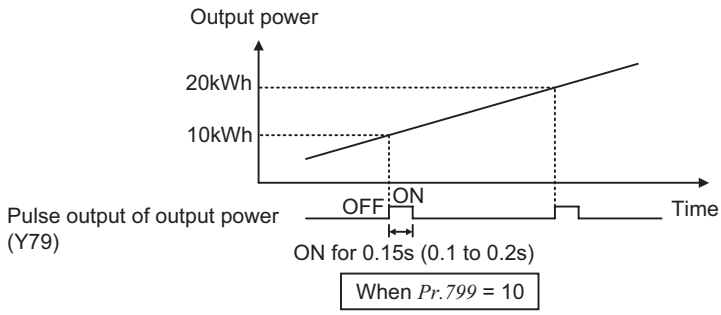

CAUTION

- Because the accumulated data in the inverter is cleared when control power is lost by power failure or at an inverter reset, the value on the monitor cannot be used to charge electricity bill.
- Changing the terminal assignment using *Pr. 190 to Pr. 196 (output terminal function selection)* may affect the other functions. Please set parameters after confirming the function of each terminal. *(Refer to page 128)*

REMARKS

- When parameter copy is performed, *Pr.799* = "9999" might be set. However, the inverter operates as *Pr.799* were at "1kWh" (initial value) in such case.

4.11 Monitor display and monitor output signal

Purpose	Parameter that must be set		Refer to Page
Display motor speed Set speed	Speed display and speed setting	Pr. 37, Pr. 144, Pr. 505	139
Change PU monitor display data	DU/PU main display data selection Cumulative monitor clear	Pr. 52, Pr. 170, Pr. 171, Pr. 268, Pr. 891	141
Change of the monitor output from terminal CA and AM	Terminal CA, AM function selection	Pr. 54, Pr. 158, Pr. 867, Pr. 869	141
Set the reference of the monitor output from terminal CA and AM	Setting of reference of terminal CA and AM	Pr. 55, Pr. 56, Pr. 867	147
Adjust terminal CA, AM outputs	Terminal CA, AM calibration	Pr. 900, Pr. 901, Pr. 930, Pr. 931	149

4.11.1 Speed display and speed setting (Pr. 37, Pr. 144, Pr. 505)

You can change the PU (FR-DU07/FR-PU04/FR-PU07) monitor display or frequency setting to motor speed or machine speed.

Parameter Number	Name	Initial Value	Setting Range	Description
37	Speed display	0	0	Frequency display, setting
			1 to 9998 *1	Set the machine speed at 60Hz.
144	Speed setting switchover	4	0, 2, 4, 6, 8, 10, 102, 104, 106, 108, 110	Set the number of motor poles when displaying the motor speed.
505 Ver.UP	Speed setting reference	60Hz	1 to 120Hz	Set the reference speed for *Pr. 37*.

Ver.UP ..... The specification differs according to the manufacture date. Refer to *page 400* and check the SERIAL.

*1 The maximum value of the setting range differs according to the *Pr.1 Maximum frequency* and it can be calculated from the following formula.

$$Pr.37 \text{ (set maximum value)} < \frac{65535 \times Pr.505}{Pr.1 \text{(Hz)}}$$

Note that *Pr.37* (set maximum value) is 9998 if the result of the above formula exceeds 9998.

*2 The above parameters can be set when *Pr. 160 User group read selection* = "0". *(Refer to page 190)*

- To display the machine speed, set in *Pr. 37* the machine speed for operation with frequency set in *Pr. 505*.
  For example, when *Pr. 505* = "60Hz" and *Pr. 37* = "1000", "1000" is displayed on the running speed monitor when the running frequency is 60Hz. When running frequency is 30Hz, "500" is displayed.
- When displaying the motor speed, set the number of motor poles (2, 4, 6, 8, 10) or number of motor poles + 100 (102, 104, 106, 108, 110) to *Pr. 144*.
- When both *Pr. 37* and *Pr. 144* have been set, their priorities are as given below.
  Pr. 144, 102 to 110 > *Pr. 37*, 1 to 9998 > *Pr. 144*, 2 to 10
- When the running speed monitor is selected, each monitor and setting are determined by the combination of *Pr. 37* and *Pr. 144* as listed below. (The units within the thick frame are the initial values.)

Pr. 37 Setting	*Pr. 144* Setting	Output Frequency Monitor	Set Frequency Monitor	Running Speed Monitor	Frequency Setting Parameter Setting
0 (initial value)	0	Hz	Hz	r/min *1	Hz
	2 to 10	Hz	Hz	r/min *1	Hz
	102 to 110	r/min *1	r/min *1	r/min *1	r/min *1
1 to 9998	0	Hz	Hz	Machine speed *1	Hz
	2 to 10	Machine speed *1	Machine speed *1	Machine speed *1	Machine speed *1
	102 to 110	Hz	Hz	r/min *1	Hz

*1 Motor speed r/min conversion formula..... frequency × 120/number of motor poles (*Pr. 144*)
Machine speed conversion formula.....*Pr. 37* × frequency/*Pr. 505* setting (Hz)
For *Pr. 144* in the above formula, the value is "*Pr. 144*-100" when "102 to 110" is set in *Pr. 144* and the value is "4" when *Pr. 37* = 0 and *Pr. 144* = 0.

*2 The increments for Hz are 0.01Hz, machine speed are 1m/min, and r/min are 1r/min.

*3 *Pr. 505* is always set as frequency (Hz).

CAUTION

- Under V/F control, the output frequency of the inverter is displayed in terms of synchronous speed, and therefore, displayed value = actual speed + motor slip.
- When the running speed display is selected at the setting of *Pr. 37* "0" and *Pr. 144* "0", the monitor display is provided on the assumption that the number of motor poles is 4. (Displayed as 1800r/min when *Pr.505* is set.)
- Refer to *Pr. 52* when you want to change the PU main monitor (PU main display).
- Since the panel display of the operation panel (FR-DU07) is 4 digits in length, the monitor value of more than "9999" is displayed "----".
- When an optional FR-A7ND or FR-A7NL card is mounted, frequency is displayed regardless of *Pr. 37* and *Pr. 144* setting.

⚠ CAUTION

⚠ Make sure that the settings of the running speed and number of motor poles are correct. Otherwise, the motor might run at extremely high speed, damaging the machine.

♦ Parameters referred to ♦

Pr. 52 DU/PU main display data selection ☞ *Refer to page 141*

4.11.2 DU/PU monitor display selection (Pr. 52, Pr. 54, Pr. 158, Pr. 170, Pr. 171, Pr. 268, Pr. 563, Pr. 564, Pr. 891)

The monitor to be displayed on the main screen of the operation panel (FR-DU07)/parameter unit (FR-PU04/FR-PU07) can be selected.

Parameter Number	Name	Initial Value	Setting Range	Description
52 * Ver.UP	DU/PU main display data selection	0 (output frequency)	0, 5, 6, 8 to 14, 17, 20, 23 to 25, 50 to 57, 67, 81 to 86 100	Select the monitor to be displayed on the operation panel and parameter unit. Refer to the following table for monitor description.
54 * Ver.UP	CA terminal function selection	1 (output frequency)	1 to 3, 5, 6, 8 to 14, 17, 21, 24, 50, 52, 53, 67, 70, 85	Select the monitor output to terminal CA.
158 * Ver.UP	AM terminal function selection		1 to 3, 5, 6, 8 to 14, 17, 21, 24, 50, 52, 53, 67, 70, 86	Select the monitor output to terminal AM.
170	Watt-hour meter clear	9999	0	Set "0" to clear the watt-hour meter monitor.
			10	Sets the maximum value for the monitoring from communication to 9999kWh.
			9999	Sets the maximum value for the monitoring from communication to 65535kWh.
171	Operation hour meter clear	9999	0, 9999	Set "0" to clear the operation time monitor. Setting "9999" has no effect.
268 *	Monitor decimal digits selection	9999	0	Displayed as integral value.
			1	Displayed in 0.1 increments.
			9999	No function
563	Energization time carrying-over times	0	0 to 65535 (reading only)	Displays the numbers of cumulative energization time monitor exceeded 65535h. Reading only
564	Operating time carrying-over times	0	0 to 65535 (reading only)	Displays the numbers of operation time monitor exceeded 65535h. Reading only
891 *	Cumulative power monitor digit shifted times	9999	0 to 4	Set the number of times to shift the cumulative power monitor digit. Clamps the monitor value at maximum.
			9999	No shift Clears the monitor value when it exceeds the maximum value.

The above parameters can be set when *Pr. 160 User group read selection* = "0". *(Refer to page 190)*

* The above parameters allow its setting to be changed during operation in any operation mode even if "0" (initial value) is set in *Pr. 77 Parameter write selection*.

Ver.UP … Specifications differ according to the date assembled. *Refer to page 400* to check the SERIAL number.

(1) Monitor description list *(Pr. 52)*

- Set the monitor to be displayed on the operation panel (FR-DU07) and parameter unit (FR-PU04/FR-PU07) in *Pr. 52 DU/PU main display data selection*.
- Set the monitor to be output to the terminal CA (analog output (0 to 20mADC current output)) in *Pr. 54 CA terminal function selection*.
- Set the monitor to be output to the terminal AM (analog output (0 to 10VDC voltage output)) in *Pr. 158 AM terminal function selection*.
- Refer to the following table and set the monitor to be displayed. (The signals marked × cannot be selected for monitoring)

Types of Monitor	Increments	*Pr. 52* Parameter Setting Value		*Pr. 54* (CA) *Pr. 158* (AM) Parameter Setting Value	Full-scale value of the terminal CA and AM	Description
		DU LED	PU main monitor			
Output frequency	0.01Hz	0/100		1	*Pr. 55*	Displays the inverter output frequency
Output current *7	0.01A/0.1A *5	0/100		2	*Pr. 56*	Displays the inverter output current effective value
Output voltage	0.1V	0/100		3	200V class: 400V 400V class: 800V	Displays the inverter output voltage
Fault display	—	0/100		×	—	Displays 8 past faults individually
Frequency setting value	0.01Hz	5	*1	5	*Pr. 55*	Displays the set frequency
Running speed	1(r/min)	6	*1	6	The value converted with the *Pr. 37* value from *Pr. 55*	Displays the motor speed (The display differs depending on the *Pr. 37* and *Pr. 144* settings.) *(For details, refer to page 139 .)*
Converter output voltage	0.1V	8	*1	8	200V class: 400V 400V class: 800V	Displays the DC bus voltage value
Regenerative brake duty	0.1%	9	*1	9	*Pr. 70*	Brake duty set in *Pr. 30* and *Pr. 70* (Setting is available for the FR-F720-03160 (FR-F740-01800) or more)
Electronic thermal relay function load factor	0.1%	10	*1	10	100%	Displays the motor thermal cumulative value on the assumption that the thermal operation level is 100%.
Output current peak value	0.01A/0.1A *5	11	*1	11	*Pr. 56*	Retains the peak value of the output current monitor and displays (clears at every start)
Converter output voltage peak value	0.1V	12	*1	12	200V class: 400V 400V class: 800V	Retains the peak value of the DC bus voltage value and displays (clears at every start)
Input power	0.01kW/ 0.1kW *5	13	*1	13	Rated inverter power × 2	Displays power of the inverter input side
Output power *7	0.01kW/ 0.1kW *5	14	*1	14	Rated inverter power × 2	Displays power of the inverter output side
Load meter	0.1%	17		17	100%	Displays the torque current in % on the assumption that the *Pr. 56* setting is 100%
Cumulative energization time *2	1h	20		×	—	Displays the cumulative energization time since the inverter shipment You can check the numbers of the monitor value exceeded 65535h with *Pr. 563*.
Reference voltage output	—	—		21	—	Terminal CA: 20mA is output Terminal AM: 10V is output
Actual operation time *2*3	1h	23		×	—	Displays the cumulative inverter running time. You can check the numbers of the monitor value exceeded 65535h with *Pr. 564*. Use *Pr. 171* to clear the value. *(Refer to page 146 .)*
Motor load factor	0.1%	24		24	200%	Displays the output current value in % on the assumption that the rated inverter current value is 100%. Monitor value = output current monitor value/rated inverter current × 100 [%]

Types of Monitor	Increments	*Pr. 52* Parameter Setting Value		*Pr. 54* (CA) *Pr. 158* (AM) Parameter Setting Value	Full-scale value of the terminal CA and AM	Description
		DU LED	PU main monitor			
Cumulative power *6	0.01kWh/ 0.1kWh *4, *5	25		×	—	Displays the cumulative power amount according to the output power monitor Use *Pr. 170* to clear the value. *(Refer to page 146.)*
Power saving effect	Variable according to parameters	50		50	Inverter capacity	Displays energy saving effect monitor You can change the monitor to power saving, power saving average value, charge display and % display using parameters. *(For details, refer to page 165.)*
Cumulative saving power *6		51		×	—	
PID set point	0.1%	52		52	100%/ *C42 or C44*	Displays the set point, measured value and deviation during PID control *(For details, refer to page 269.)*
PID measured value	0.1%	53		53	100%/ *C42 or C44*	
PID deviation	0.1%	54		×	—	
Input terminal status	—	55	*1	×	—	Displays ON/OFF status of the input terminal on the PU *(Refer to page 145 for DU display)*
Output terminal status	—		*1	×	—	Displays ON/OFF status of the output terminal on the PU *(Refer to page 145 for DU display)*
Option input terminal status	—	56	×	×	—	Displays ON/OFF status of the input terminal of the digital input option (FR-A7AX) on the DU *(Refer to page 145 for details)*
Option output terminal status	—	57	×	×	—	Displays ON/OFF status of the output terminal of the digital output option (FR-A7AY) and relay output option (FR-A7AR) on the DU *(Refer to page 145 for details)*
PID measured value 2	0.1%	67		67	100%/ *C42 or C44*	Displays the measured value *(For details, refer to page 269.)*
PLC function output	0.1%	×		70	100%	Desired values can be output from terminal CA and AM using the PLC function. Refer to the FR-F700 PLC function programming manual for details of the PLC function.
BACnet reception status	1	81		×	—	Displays the reception status of BACnet communication *(Refer to page 247 for details)*
BACnet token pass counter	1	82		×	—	Displays the count of received token
BACnet valid APDU counter	1	83		×	—	Displays the count of valid APDU detection
BACnet communication error counter	1	84		×	—	Displays the count of communication error
Terminal CA output level	—	85		85 (*Pr. 54* only)	20mA	Displays actual output current level of terminal CA which is controlled by BACnet communication *(Refer to page 247 for details)*
Terminal AM output level	—	86		86 (*Pr. 158* only)	10V	Displays actual output voltage level of terminal AM which is controlled by BACnet communication *(Refer to page 247 for details)*

*1 Frequency setting to output terminal status on the PU main monitor are selected by "other monitor selection" of the parameter unit (FR-PU04, FR-PU07).
*2 The cumulative energization time and actual operation time are accumulated from 0 to 65535 hours, then cleared, and accumulated again from 0. When the operation panel (FR-DU07) is used, the time is displayed up to 65.53 (65530h) in the indication of 1h = 0.001, and thereafter, it is added up from 0.
*3 The actual operation time is not added up if the cumulative operation time before power supply-OFF is less than 1h.
*4 When using the parameter unit (FR-PU04/FR-PU07), "kW" is displayed.
*5 The setting depends on capacities. (FR-F720-02330 (FR-F740-01160) or less/FR-F720-03160 (FR-F740-01800) or more)
*6 Since the panel display of the operation panel is 4 digits in length, the monitor value of more than "9999" is displayed as "----".
*7 When the output current is less than the specified current level (5% of the rated inverter current), the output current is monitored as 0A. Therefore, the monitored value of an output current and output power may be displayed as "0" when using a much smaller-capacity motor compared to the inverter or in other instances that cause the output current to fall below the specified value.

REMARKS

- By setting "0" in *Pr. 52*, the monitoring of output speed to fault display can be selected in sequence by (SET).
- When the operation panel (FR-DU07) is used, the displayed units are Hz, V and A only and the others are not displayed.
- The monitor set in *Pr. 52* is displayed in the third monitor position. (The output voltage monitor is changed.)

Initial value

* The monitor displayed at powering ON is the first monitor. Display the monitor you want to display on the first monitor and hold down (SET) for 1s. (To return to the output frequency monitor, hold down (SET) for 1s after displaying the output frequency monitor.)

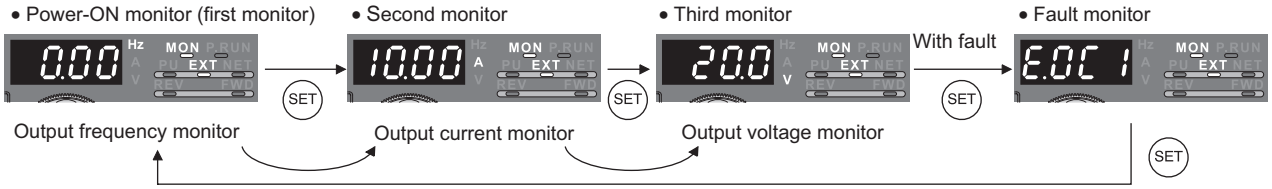

Example)When *Pr. 52* is set to "20" (cumulative energization time), the monitor is displayed on the operation panel as described below.

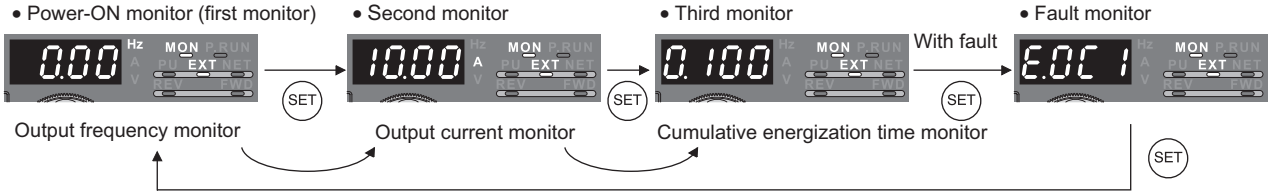

(2) Display set frequency during stop *(Pr. 52)*

- When *Pr. 52* is set to "100", the set frequency monitor is displayed during a stop and the output frequency monitor is displayed during operation. (LED of Hz flickers during stop and is lit during running.)
  When *Pr.52*="100", the set frequency displayed at a stop indicates frequency to be output when the start command is ON.
  Different from the frequency setting based on displayed when *Pr. 52*="5", the value maximum/minimum frequency and frequency jump is displayed.

	Pr. 52		
	0	**100**	
	During running/stop	**During stop**	**During running**
Output frequency	Output frequency	Set frequency	Output frequency
Output current	Output current		
Output voltage	Output voltage		
Fault display	Fault display		

REMARKS

- During an error, the output frequency at error occurrence appears.
- During MRS, the values displayed are the same as during a stop.

(3) Operation panel (FR-DU07) I/O terminal monitor *(Pr. 52)*

- When *Pr. 52* is set to any of "55 to 57", the I/O terminal states can be monitored on the operation panel (FR-DU07).
- The I/O terminal monitor is displayed on the third monitor.
- The LED is ON when the terminal is ON, and the LED is OFF when the terminal is OFF. The center line of LED is always ON.

Pr. 52 Setting	Monitor Description
55	Displays the I/O and output terminal ON/OFF states of the inverter unit.
56 *	Displays the input terminal ON/OFF states of the digital input option (FR-A7AX).
57 *	Displays the output terminal ON/OFF states of the digital output option (FR-A7AY) or relay output option (FR-A7AR).

* You can set "56" or "57" even if the option is not fitted. When the option is not fitted, the monitor displays are all OFF.

- On the unit I/O terminal monitor (*Pr. 52* = "55"), the upper LEDs denote the input terminal states and the lower the output terminal states.

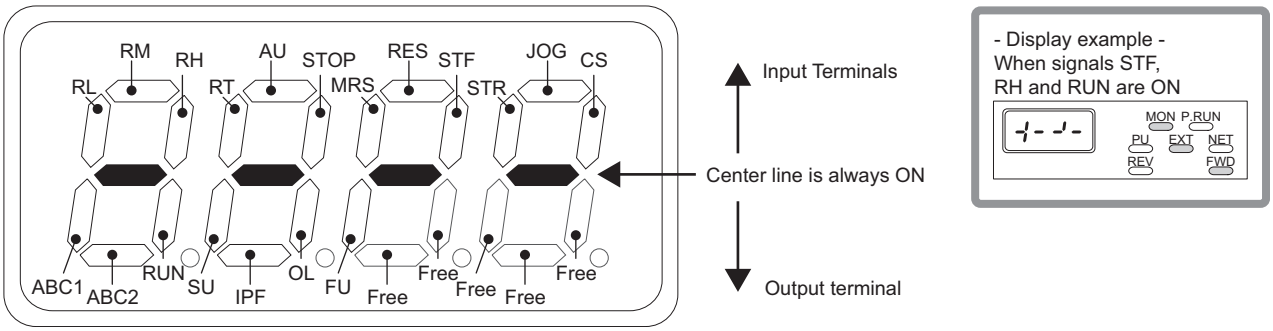

- On the input option terminal monitor (*Pr. 52*= "56"), the decimal point LED of the first digit LED is ON.

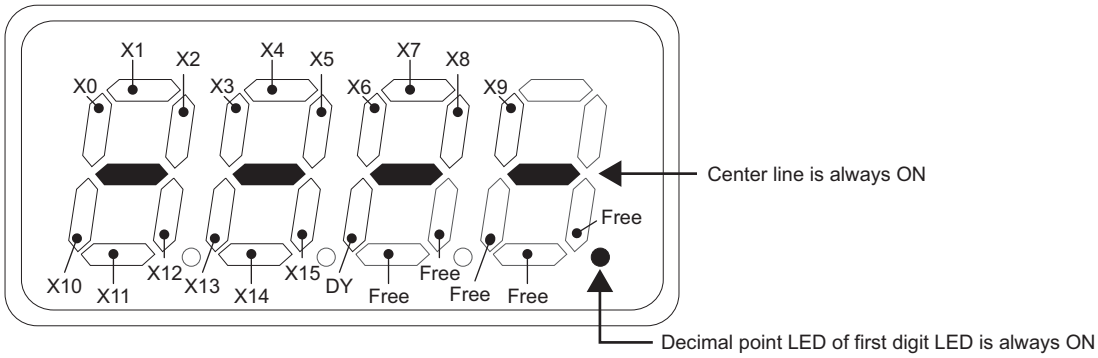

- On the input option terminal monitor (*Pr. 52*= "57"), the decimal point LED of the second digit LED is ON.

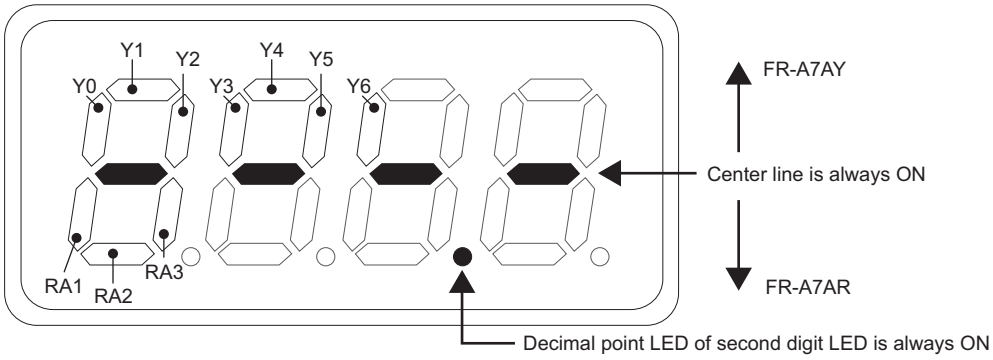

(4) Cumulative power monitor and clear *(Pr. 170, Pr. 891)*

- On the cumulative power monitor (*Pr. 52* = "25"), the output power monitor value is added up and is updated in 1h increments.
- The operation panel (FR-DU07), parameter unit (FR-PU04/FR-PU07) and communication (RS-485 communication, communication option) display units and display ranges are as indicated below.

Operation Panel *1		Parameter Unit *2		Communication		
Range	Unit	Range	Unit	Range		Unit
				Pr. 170 = 10	*Pr. 170* = 9999	
0 to 99.99kWh	0.01kWh	0 to 999.99kWh	0.01kWh	0 to 9999kWh	0 to 65535kWh (initial value)	1kWh
100.0 to 999.9kWh	0.1kWh	1000.0 to 9999.9kWh	0.1kWh			
1000 to 9999kWh	1kWh	10000 to 99999kWh	1kWh			

*1 Power is measured in the range 0 to 9999.99kWh, and displayed in 4 digits.
When the monitor value exceeds "99.99", a carry occurs, e.g. "100.0", so the value is displayed in 0.1kWh increments.
*2 Power is measured in the range 0 to 99999.99.99kWh, and displayed in 5 digits.
When the monitor value exceeds "999.99", a carry occurs, e.g. "1000.0", so the value is displayed in 0.1kWh increments.

- The monitor data digit can be shifted to the right by the number of *Pr. 891* settings.
  For example, if the cumulative power value is 1278.56kWh when *Pr. 891* = "2", the PU/DU display is 12.78 (display in 100kWh increments) and the communication data is 12.
- If the maximum value exceeded at *Pr. 891* = "0 to 4", the power is clamped at the maximum value, indicating that a digit shift is necessary. If the maximum value exceeded at *Pr. 891* = "9999", the power returns to 0 and is recounted.
  If the maximum value is exceeded at *Pr. 891* = "9999", the power returns to 0 and is recounted.
- Writing "0" in *Pr. 170* clears the cumulative power monitor.

REMARKS

- If "0" is written in *Pr. 170* and *Pr. 170* is read again, "9999" or "10" is displayed.

(5) Cumulative energization time and actual operation time monitor *(Pr. 171, Pr. 563, Pr. 564)*

- On the cumulative energization time monitor (*Pr. 52* = "20"), the inverter running time is added up every hour.
- On the actual operation time monitor (*Pr. 52* = "23"), the inverter running time is added up every hour. (Time is not added up during a stop.)
- If the numbers of monitor value exceeds 65535, it is added up from 0. You can check the numbers of cumulative energization time monitor exceeded 65535h with *Pr. 563* and the numbers of actual operation time monitor exceeded 65535h with *Pr. 564*.
- Writing "0" in *Pr. 171* clears the actual operation time monitor. (Energization time monitor cannot be cleared.)

REMARKS

- The actual operation time is not added up unless the inverter is operated one or more hours continuously.
- If "0" is written in *Pr. 171* and *Pr. 171* is read again, "9999" is always displayed. Setting "9999" does not clear the actual operation time meter.

(6) You can select the decimal digits of the monitor *(Pr. 268)*

- As the operation panel (FR-DU07) display is 4 digits long, the decimal places may vary at analog input, etc. The decimal places can be hidden by selecting the decimal digits.
  In such a case, the decimal digits can be selected by *Pr. 268*.

Pr. 268 Setting	Description
9999 (initial value)	No function
0	When 1 or 2 decimal places (0.1 increments or 0.01 increments) are monitored, the decimal places are dropped and the monitor displays an integer value (1 increments). The monitor value of 0.99 or less is displayed as 0.
1	When 2 decimal places (0.01 increments) are monitored, the 0.01 decimal place is dropped and the monitor displays the first decimal place (0.1 increments). When the monitor display digit is originally in 1 increments, it is displayed unchanged in 1 increments.

REMARKS

- The number of display digits on the cumulative energization time (*Pr. 52* = "20"), actual operation time (*Pr. 52* = "23"), cumulative power (*Pr. 52* = "25") or cumulative saving power monitor (*Pr. 52* = "51") does not change.

♦ Parameters referred to ♦

Pr. 37 Speed display, Pr. 144 Speed setting switchover ☞ *Refer to page 139*
Pr. 55 Frequency monitoring reference, Pr. 56 Current monitoring reference ☞ *Refer to page 147*

4.11.3 CA, AM terminal function selection (Pr.55, Pr.56, Pr.867, Pr.869)

For signal output, two different output terminals are available: analog current output terminal CA and analog output terminal AM.
You can select the signals output to the terminals CA, AM.

Parameter Number	Name	Initial Value	Setting Range 200V class (400V class)		Description
55 *	Frequency monitoring reference	60Hz	0 to 400Hz		Full-scale value when frequency monitor value is output to terminal CA and AM.
56 *	Current monitoring reference	Rated inverter current	02330 (01160) or less	0 to 500A	Full-scale value when current monitor value is output to terminal CA and AM.
			03160 (01800) or more	0 to 3600A	
867	AM output filter	0.01s	0 to 5s		Set the output filter of terminal AM.
869	Current output filter	0.02s	0 to 5s		Adjust response level of current output.

The above parameters can be set when *Pr. 160 User group read selection* = "0". *(Refer to page 190)*

* The above parameters allow its setting to be changed during operation in any operation mode even if "0" (initial value) is set in *Pr. 77 Parameter write selection*.

(1) Frequency monitoring reference(*Pr. 55*)

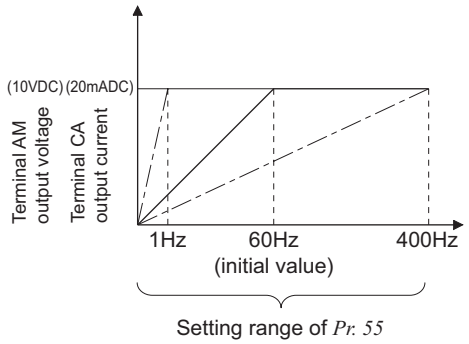

- Set the full scale value when outputting the frequency monitor from terminal CA or AM.
- For the calibration of terminal CA, set the full-scale value of the connected meter when output current of terminal CA is 20mADC.
  Set the frequency to be indicated as the full scale value on the meter (20mADC ammeter) connected between terminal CA and 5. (For example, 60Hz or 120Hz)
  Output voltage is proportional to the frequency. (Maximum output current is 20mADC.)
- For the calibration of terminal AM, set the full-scale value of the connected meter when output voltage of terminal AM is 10VDC.
  Set the frequency to be indicated as the full scale value on the meter (10VDC voltmeter) connected between terminal AM and 5. (For example, 60Hz or 120Hz)
  Output voltage is proportional to the frequency. (Maximum output voltage is 10VDC.)

(2) Current monitoring reference (*Pr. 56*)

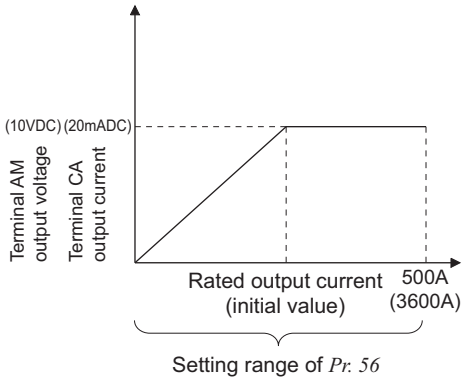

- Set the full scale value when outputting the current monitor from terminal CA or AM.
- For the calibration of terminal CA, set the full-scale value of the connected current meter when the output current of terminal CA is 20mADC.
  Set the current to be indicated as the full scale value on the meter (20mADC ammeter) connected between terminal CA and 5.
  Output current is proportional to the monitored value of output current. (Maximum output current is 20mADC.)
- For the calibration of terminal AM, set the full-scale value of the connected current meter when the output voltage of terminal AM is 10VDC.
  Set the current to be indicated as the full scale value on the meter (10VDC voltmeter) connected between terminal AM and 5.
  Output voltage is proportional to the monitored value of output current. (Maximum output voltage is 10VDC.)

(3) Terminal AM response adjustment *(Pr. 867)*

- Using *Pr. 867*, the output voltage response of the terminal AM can be adjusted within the range 0 to 5s.
- Increasing the setting stabilizes the terminal AM output more but reduces the response level. (Setting "0" sets the response level to 7ms)

(4) Adjustment of response level of terminal CA *(Pr. 869)*

- The response level of the output current of the terminal CA can be adjusted between 0 and 5s with *Pr. 869*.
- Increasing the setting stabilizes the terminal CA output more but reduces the response level. (Setting "0" sets the response level to about 7ms.)

♦ Parameters referred to ♦

Pr. 37 Speed display ☞ *Refer to page 139*

4.11.4 Terminal CA, AM calibration (Calibration parameter C0 (Pr. 900), C1 (Pr. 901), C8 (Pr.930) to C11 (Pr. 931))

By using the operation panel or parameter unit, you can calibrate terminal CA and terminal AM to full scale deflection.

Parameter Number	Name	Initial Value	Setting Range	Description
C0(900)	CA terminal calibration	—	—	Calibrates the scale of the meter connected to terminal CA.
C1(901)	AM terminal calibration	—	—	Calibrates the scale of the analog meter connected to terminal AM.
C8(930)	Current output bias signal	0%	0 to 100%	Output signal value for minimum analog current output
C9(930)	Current output bias current	0%	0 to 100%	Output current value for minimum analog current output
C10(931)	Current output gain signal	100%	0 to 100%	Output signal value for maximum analog current output
C11(931)	Current output gain current	100%	0 to 100%	Output current value for maximum analog current output

*1 The above parameters can be set when *Pr. 160 User group read selection* = "0". *(Refer to page 190.)*
*2 The parameter number in parentheses is the one for use with the parameter unit (FR-PU04/FR-PU07).
*3 The above parameters allow its setting to be changed during operation in any operation mode even if "0" (initial value) is set in *Pr. 77 Parameter write selection*.

(1) CA terminal calibration (*C0(Pr. 900), C8(Pr. 930) to C11(Pr. 931)*)

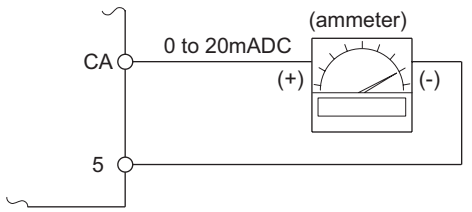

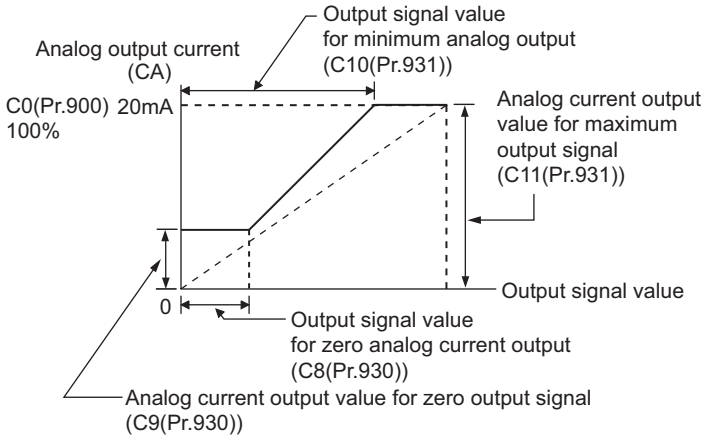

- Terminal CA is factory-set to provide a 20mADC output in the full-scale status of the corresponding monitor item. Calibration parameter *C0 (Pr. 900)* allows the output current ratios (gains) to be adjusted according to the meter scale. Note that the maximum output current is 20mADC.
- Use calibration parameters *C8(Pr. 930)* and *C9(Pr. 930)* to set a value for zero analog current output (meter points zero) . In addition, use calibration parameters *C10(Pr. 931)* and *C11(Pr. 931)* to set a value for maximum analog current output.
- Use calibration parameters *C8(Pr. 930)* and *C10(Pr.931)* to set output signal values (monitor output set in *Pr. 54*) when the current output at terminal CA is zero or maximum. At this time, the full-scale of each monitor is 100%. *(Refer to page 142)*
- Use calibration parameters *C9(Pr. 930)* and *C11(Pr.931)* to set the current output values at terminal CA when the output signal value (monitor output set in *Pr. 54*) is zero or maximum. At this time, the current output calibrated using calibration parameter *C0(Pr. 900)* is 100%.

- Calibrate CA terminal in the following procedure.
  1) Connect a 0-20mADC meter (DC ammeter) to across inverter terminals CA and 5. (Note the polarity. Terminal CA is plus.)
  2) Set calibration parameters *C8(Pr. 930)* to *C11 (Pr. 931)* to initial values. (When the meter needle does not point to 0, calibrate using *C8(Pr. 930)* and *C9(Pr. 930)*)
  3) Refer to the monitor description list *(page 142)* to set *Pr. 54*.
     When running frequency, inverter output current or the like has been selected as the monitor, preset in *Pr. 55* or *Pr. 56* the running frequency or current value at which the output signal is 20mA.
  4) Run the inverter. (The inverter may be run in either the PU or External operation mode.)
  5) Use calibration parameter *C0(Pr. 900)* to set the meter needle to point to full-scale.

REMARKS

- When calibrating a monitor output signal, which cannot be adjusted to 100% value without an actual load and a measurement equipment, set *Pr. 54* to "21" (reference voltage output). (20mADC is output at terminal CA.)
- Even when calibration parameters are set as *C8(Pr. 930)* ≥ *C10(Pr. 931)* and *C9(Pr. 930)* ≥ *C11(Pr. 931)*, current can be output at terminal CA.

(2) AM terminal calibration *(C1(Pr.901))*

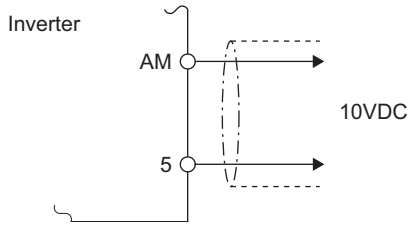

· Terminal AM is factory-set to provide a 10VDC output in the full-scale status of the corresponding monitor item. Calibration parameter *C1 (Pr. 901)* allows the output voltage ratios (gains) to be adjusted according to the meter scale. Note that the maximum output voltage is 10VDC.

· Calibrate the AM terminal in the following procedure.

1) Connect a 0-10VDC meter (frequency meter) to across inverter terminals AM and 5. (Note the polarity. The terminal AM is positive.)
2) Refer to the monitor description list *(page 142)* and set *Pr. 158*.
   When you selected the running frequency or inverter output current as the monitor, preset the running frequency or current value, at which the output signal will be 10V, to *Pr. 55* or *Pr. 56*.
3) When outputting the item that cannot achieve a 100% value easily by operation, e.g. output current, set "21" (reference voltage output) in *Pr. 158* and perform the following operation. After that, set "2" (output current, for example) in *Pr. 158*.

REMARKS

· When calibrating a monitor output signal, which cannot be adjusted to 100% value without an actual load and a measurement equipment, set *Pr. 158* to "21" (reference voltage output).10VDC is output from the terminal AM.

♦ Parameters referred to ♦

Pr. 54 CA terminal function selection ☞ *Refer to page 147*
Pr. 55 Frequency monitoring reference ☞ *Refer to page 147*
Pr.56 Current monitoring reference ☞ *Refer to page 147*
Pr.158 AM terminal function selection ☞ *Refer to page 147*

4.11.5 How to calibrate the terminal CA when using the operation panel (FR-DU07)

Operation	Display (When *Pr. 54* = 1)
1. Confirmation of the RUN indication and operation mode indication	0.00 Hz MON P.RUN PU EXT NET REV FWD
2. Press MODE to choose the parameter setting mode.	MODE ⇨ P. 0 (The parameter number read previously appears.)
3. Turn ◎ until C. . . appears.	⇨ C. . . (*C0 to C11* setting is enabled.)
4. Press SET to display C - - - .	SET ⇨ C - - -
5. Turn ◎ until C 0 appears. Set to *C0 CA terminal calibration*.	⇨ C 0
6. Press SET to enable setting.	SET ⇨ 0.00 Hz (The monitor set to *Pr. 54 CA terminal function selection* is displayed.)
7. If the inverter is at a stop, (press FWD or REV) to start the inverter. (Motor needs not be connected.)	FWD (REV) ⇨ 0.00 Hz MON P.RUN PU EXT NET REV FWD
8. Turn ◎ to adjust the indicator needle to the desired position.	+ ⇨ Analog indicator
9. Press SET. Setting is complete.	- SET ⇨ 60.00 Hz ↔ C 0

Flicker...Parameter setting complete!!

- Turn ◎ to read another parameter.
- Press SET to return to the C - - - indication (step 4).
- Press SET twice to show the next parameter (Pr.CL).

REMARKS

- Calibration can also be made for external operation. Set the frequency in External operation mode, and make calibration in the above procedure.
- Calibration is available even during operation.
- For the operating procedure using the parameter unit (FR-PU04/FR-PU07), refer to the parameter unit instruction manual.

♦ Parameters referred to ♦

C0 CA terminal calibration ☞ *Refer to page 149*
C1 AM terminal calibration ☞ *Refer to page 149*

4.12 Operation selection at power failure and instantaneous power failure

Purpose	Parameter that must be Set		Refer to Page
At instantaneous power failure occurrence, restart inverter without stopping motor	**Automatic restart operation after instantaneous power failure / flying start**	**Pr. 57, Pr. 58, Pr. 162 to Pr. 165, Pr. 299, Pr. 611**	152
When undervoltage or a power failure occurs, the inverter can be decelerated to a stop.	**Power failure-time deceleration-to-stop function**	**Pr. 261 to Pr. 266**	156

4.12.1 Automatic restart after instantaneous power failure / flying start (Pr. 57, Pr. 58, Pr. 162 to Pr. 165, Pr. 299, Pr. 611)

You can restart the inverter without stopping the motor in the following cases.
- when bypass operation is switched to inverter operation
- when power comes back ON after an instantaneous power failure
- when motor is coasting at start

Parameter Number	Name	Initial Value 200V class (400V class)	Setting Range 200V class (400V class)	Description 200V class (400V class)
57	**Restart coasting time**	9999	0	FR-F720-00077 (FR-F740-00038) or less.... 0.5s FR-F720-00105 to 00340 (FR-F740-00052 to 00170)..... 1s FR-F720-00490 to 02330 (FR-F740-00250 to 01160) ..... 3.0s FR-F720-03160 (FR-F740-01800) or more .. 5.0s The above times are coasting time.
			02330 (01160) or less: 0.1 to 5s 03160 (01800) or more: 0.1 to 30s	Set the waiting time for inverter-triggered restart after an instantaneous power failure.
			9999	No restart
58	**Restart cushion time**	1s	0 to 60s	Set a voltage starting time at restart.
162	**Automatic restart after instantaneous power failure selection**	0	0	With frequency search
			1	Without frequency search (Reduced voltage system)
			10	Frequency search at every start
			11	Reduced voltage system at every start
163	**First cushion time for restart**	0s	0 to 20s	Set a voltage starting time at restart. Consider using these parameters according to the load (moment of inertia, torque) magnitude.
164	**First cushion voltage for restart**	0%	0 to 100%	
165	**Stall prevention operation level for restart**	110%*1	0 to 120%*1	Considers the rated inverter current as 100% and set the stall prevention operation level during restart operation.
299	**Rotation direction detection selection at restarting**	9999	0	Without rotation direction detection
			1	With rotation direction detection
			9999	When *Pr. 78*="0", the rotation direction is detected. When *Pr. 78*="1", "2", the rotation direction is not detected.
611	**Acceleration time at a restart**	02330 (01160) or less: 5s 03160 (01800) or more: 15s	0 to 3600s, 9999	Set the acceleration time to reach *Pr. 20 Acceleration/deceleration reference frequency* at a restart. Acceleration time for restart is the normal acceleration time (e.g. *Pr. 7*) when "9999" is set.

The above parameters can be set when *Pr. 160 User group read selection* = "0". *(Refer to page 190)*

*1 When *Pr. 570 Multiple rating setting* = "1", performing inverter reset and all parameter clear changes the initial value and setting range. *(Refer to page 86.)*

(1) Automatic restart after instantaneous power failure operation

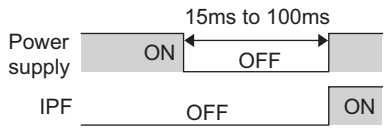

- When Instantaneous power failure protection (E.IPF) and undervoltage protection (E.UVT) are activated, the inverter output is shut off. (Refer to *page 340* for E.IPF and E.UVT.)
  When automatic restart after instantaneous power failure operation is set, the motor can be restarted if power is restored after an instantaneous power failure and under voltage. (E.IPF and E.UVT are not activated.)
- When E.IPF and E.UVT are activated, instantaneous power failure/under voltage signal (IPF) is output.
- The IPF signal is assigned to the terminal IPF in the initial setting. The IPF signal can also be assigned to the other terminal by setting "2 (positive logic) or 102 (negative logic)" in any of *Pr. 190 to Pr. 196 (output terminal function selection)*.

(2) Connection (CS signal)

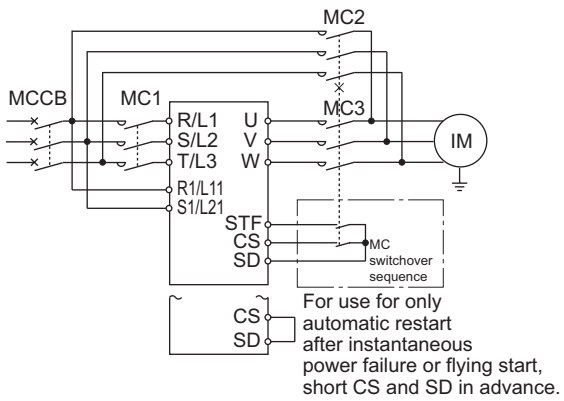

- When the automatic restart after instantaneous power failure selection signal (CS) is turned ON, automatic restart operation is enabled.
- When *Pr. 57* is set to other than "9999" (automatic restart operation enabled), the inverter will not operate if used with the CS signal remained OFF.

REMARKS

- The CS signal is assigned to the terminal CS in the initial setting. By setting "6" in any of *Pr. 178 to Pr. 189 (input terminal function selection)*, you can assign the CS signal to the other terminal.

(3) Automatic restart operation selection *(Pr. 162, Pr. 299)*

When *Pr. 162* = 0, 10 (with frequency search)

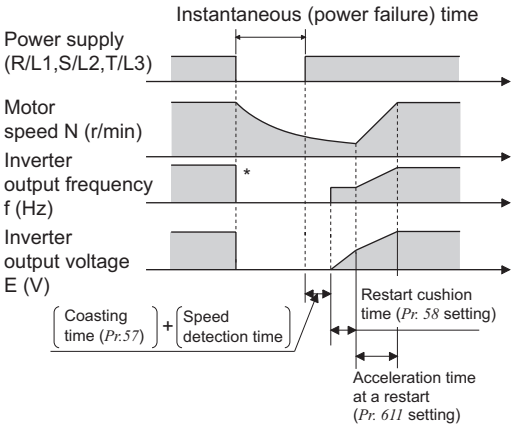

* The output shut off timing differs according to the load condition.

- **With frequency search**
  When "0 (initial value), 10" is set in *Pr. 162*, the inverter smoothly starts after detecting the motor speed upon power restoration.
- During reverse rotation, the inverter can be restarted smoothly as the direction of rotation is detected.
- You can select whether to make rotation direction detection or not with *Pr. 299 "Rotation direction detection selection at restarting"*. When capacities of the motor and inverter differ, set "0" (without rotation direction detection) in *Pr. 299*.

Pr.299 Setting	*Pr.78* Setting		
	0	1	2
9999 (initial value)	○	×	×
0	×	×	×
1	○	○	○

○: with rotation direction detection
×: with rotation direction detection

REMARKS

- Speed detection time (frequency search) changes according to the motor speed. (maximum 500ms)
- When the inverter capacity is two rank or more larger than the motor capacity, the inverter may not start due to overcurrent trip (E.OC☐).
- If two or more motors are connected to one inverter, the inverter functions abnormally. (Inverter does not start properly.)
- Since the DC injection brake is operated instantaneously when the speed is detected at a restart, the speed may reduce if the moment of inertia of the load is small.
- When reverse rotation is detected when *Pr. 78*="1" (reverse rotation disabled), the rotation direction is changed to forward rotation after decelerates in reverse rotation when the start command is forward rotation. The inverter will not start when the start command is reverse rotation.

When *Pr. 162* = 1, 11 (without frequency search)

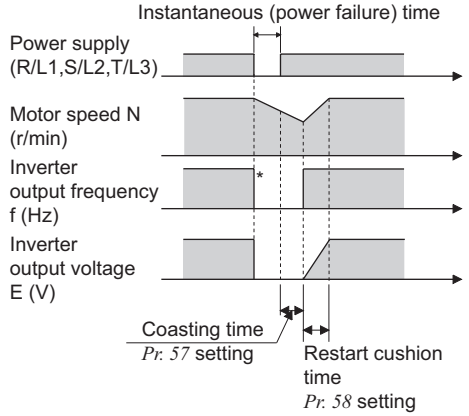

* The output shut off timing differs according to the load condition.

●Without frequency search

When *Pr. 162* = "1, 11", automatic restart operation is performed in a reduced voltage system, where the voltage is gradually risen with the output frequency unchanged from prior to an instantaneous power failure independently of the coasting speed of the motor.

REMARKS

- This system stores the output frequency prior to an instantaneous power failure and increases the voltage. Therefore, if the instantaneous power failure time exceeds 0.2s, the inverter starts at *Pr. 13 Starting frequency* (initial value = 0.5Hz) since the stored output frequency cannot be retained.

●Restart operation at every start

When *Pr. 162* = "10" or "11", automatic restart operation is also performed every start, in addition to the automatic restart after instantaneous power failure. When *Pr. 162* = "0", automatic restart operation is performed at the first start after power supply-ON, but not performed at the second time or later.

(4) Restart coasting time *(Pr. 57)*

- Coasting time is the time from when the motor speed is detected until automatic restart control is started.
- Set *Pr. 57* to "0" to perform automatic restart operation. The coasting time is automatically set to the value below. Generally this setting will pose no problems.

200V class	00077 or less	00105 to 00340	00490 to 02330	03160 or more
400V class	00038 or less	00052 to 00170	00250 to 01160	01800 or more
Coasting time	0.5s	1s	3s	5s

- Operation may not be performed well depending on the magnitude of the moment of inertia(J) of the load or operation frequency. Adjust the coasting time between 0.1s and 5s according to the load specifications.

(5) Restart cushion time *(Pr. 58)*

- Cushion time is the length of time taken to raise the voltage appropriate to the detected motor speed (output frequency prior to instantaneous power failure when *Pr. 162* = "1" or "11").
- Normally the initial value need not be changed for operation, but adjust it according to the magnitude of the moment of inertia(J) of the load or torque magnitude.

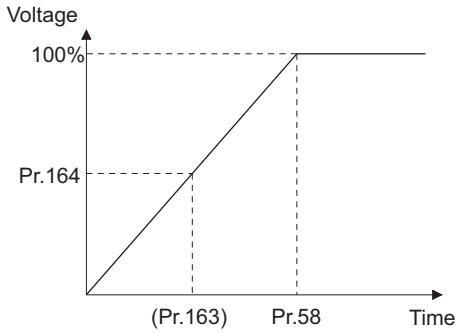

(6) Automatic restart operation adjustment *(Pr. 163 to Pr. 165, Pr. 611)*

- Using *Pr. 163* and *Pr. 164*, you can adjust the voltage rise time at a restart as shown on the left.
- Using *Pr. 165*, you can set the stall prevention operation level at a restart.
- Using *Pr. 611*, you can set the acceleration time until *Pr. 20 Acceleration/deceleration reference frequency* is reached after automatic restart operation is performed besides the normal acceleration time.

REMARKS

- If the setting of *Pr. 21 Acceleration/deceleration time increments* is changed, the setting increments of *Pr. 611* do not change.

CAUTION

- Changing the terminal assignment using *Pr. 178 to Pr. 196 (I/O terminal function selection)* may affect the other functions. Set parameters after confirming the function of each terminal.
- When automatic restart operation is selected, undervoltage protection (E.UVT) and instantaneous power failure protection (E.IPF) among the fault output signals will not be provided at occurrence of an instantaneous power failure.
- The SU and FU signals are not output during a restart. They are output after the restart cushion time has elapsed.
- Automatic restart operation will also be performed after a reset when a retry is made by the retry function.

⚠ CAUTION

⚠ Provide mechanical interlocks for MC1 and MC2. The inverter will be damaged if the power supply is input to the inverter output section.

⚠ When automatic restart after instantaneous power failure has been selected, the motor and machine will start suddenly (after the reset time has elapsed) after occurrence of an instantaneous power failure. Stay away from the motor and machine. When you have selected automatic restart after instantaneous power failure function, apply in easily visible places the CAUTION stickers supplied to the installation guideline.

♦ Parameters referred to ♦

Pr. 7 Acceleration time, Pr. 21 Acceleration/deceleration time increments ☞ *Refer to page 101*
Pr. 13 Starting frequency ☞ *Refer to page 104*
Pr. 65, Pr. 67 to Pr. 69 Retry function ☞ *Refer to page 159*
Pr. 78 Reverse rotation prevention selection ☞ *Refer to page 190*
Pr. 178 to Pr. 189 (input terminal function selection) ☞ *Refer to page 122*

4.12.2 Power failure signal (Y67 signal)

When output is shutoff due to a power failure or undervoltage, the Y67 signal turns ON regardless of the automatic restart after instantaneous power failure function setting.
Y67 signal turns OFF at power failure recovery or undervoltage recovery.
To use Y67 signal, set "67 (positive logic) or 167 (negative logic)" in any of *Pr. 190* to *Pr. 192* (Output terminal function selection) to assign the function.

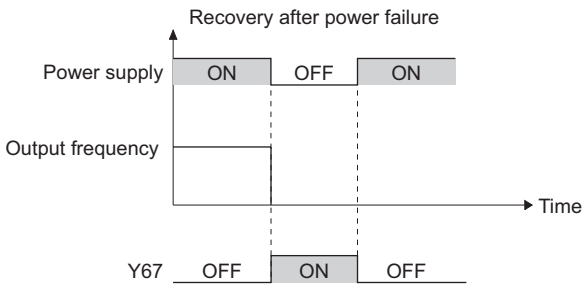

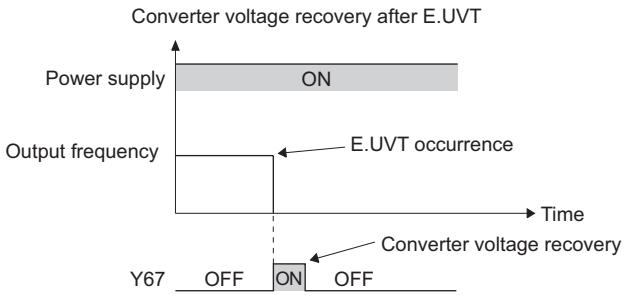

CAUTION

- Changing the terminal assignment using *Pr.190* to *Pr.196* (Output terminal function selection) may affect the other functions. Set parameters after confirming the function of each terminal.

♦ Parameters referred to ♦

Pr. 190 to Pr. 196 (output terminal function selection) ☞ *Refer to page 128*

4.12.3 Power failure-time deceleration-to-stop function (Pr. 261 to Pr. 266)

When a power failure or undervoltage occurs, the inverter can be decelerated to a stop or can be decelerated and re-accelerated to the set frequency.

Parameter Number	Name	Initial Value	Setting Range	Description		
				Operation at undervoltage or power failure	At power restoration during power failure deceleration	Deceleration time to a stop
261 Ver.UP	Power failure stop selection	0	0	Coasts to a stop	Coasts to a stop	—
			1	Decelerates to a stop	Decelerates to a stop	Depends on *Pr. 262* to *Pr. 266* settings
			2	Decelerates to a stop	Accelerates again	Depends on *Pr. 262* to *Pr. 266* settings
			21	Decelerates to a stop	Decelerates to a stop	Automatically adjusts the deceleration time
			22	Decelerates to a stop	Accelerates again	Automatically adjusts the deceleration time
262	Subtracted frequency at deceleration start	3Hz	0 to 20Hz	Normally operation can be performed with the initial value unchanged. But adjust the frequency according to the magnitude of the load specifications (moment of inertia, torque).		
263 Ver.UP	Subtraction starting frequency	60Hz	0 to 400Hz	When output frequency ≥ *Pr. 263* Decelerate from the speed obtained from output frequency minus *Pr. 262*. When output frequency < *Pr. 263* Decelerate from output frequency		
			9999	Decelerate from the speed obtained from output frequency minus *Pr. 262*.		
264	Power-failure deceleration time 1	5s	0 to 3600/ 360s *	Set a deceleration slope down to the frequency set in *Pr. 266*.		
265	Power-failure deceleration time 2	9999	0 to 3600/ 360s *	Set a deceleration slope below the frequency set in *Pr. 266*.		
			9999	Same slope as in *Pr. 264*		
266	Power failure deceleration time switchover frequency	60Hz	0 to 400Hz	Set the frequency at which the deceleration slope is switched from the *Pr. 264* setting to the *Pr. 265* setting.		

The above parameters can be set when *Pr. 160 User group read selection* = "0". *(Refer to page 190)*

Ver.UP ....Specifications differ according to the date assembled. *Refer to page 400* to check the SERIAL number.

* When the setting of *Pr. 21 Acceleration/deceleration time increments* is "0" (initial value), the setting range is "0 to 3600s" and the setting increments are "0.1s", and when the setting is "1", the setting range is "0 to 360s" and the setting increments are "0.01s"

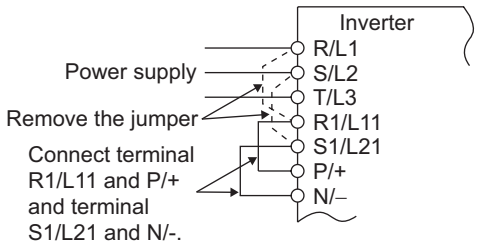

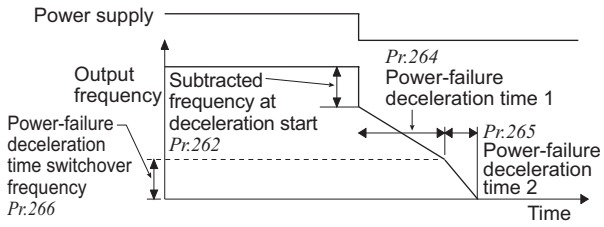

(1) Connection and parameter setting

- Remove the jumpers across terminals R/L1 and R1/L11 and across terminals S/L2 and S1/L21, and connect terminals R1/L11 and P/+ and terminals S1/L21 and N/-.
- When setting of *Pr. 261* is not "0", the inverter decelerates to a stop if an undervoltage, power failure or input phase loss (when *Pr. 872* ="1"(input phase loss enabled)) occurs.

(2) Operation outline of deceleration to stop at power failure

- If an undervoltage or power failure occurs, the output frequency is dropped by the frequency set in *Pr. 262* .
- Deceleration is made in the deceleration time set in *Pr. 264*. (The deceleration time setting is the time required from *Pr. 20 Acceleration/deceleration reference frequency* to a stop.)
- When the frequency is low and enough regenerative energy is not provided, for example, the deceleration time (slope) from *Pr. 265* to a stop can be changed.
- When *Pr. 261* = "21, 22", inverter decelerates to stop automatically by adjusting the deceleration time to make converter voltage (DC bus) constant. (The setting of *Pr. 262* to *Pr. 266* are invalid.)

(3) Power failure stop function (*Pr. 261* = "1, 21")

- If power is restored during power failure deceleration, deceleration to a stop is continued and the inverter remains stopped. To restart, turn OFF the start signal once, then turn it ON again.
- At power failure when *Pr. 261* = "21", inverter decelerates to stop automatically by adjusting the deceleration time to make converter voltage (DC bus) constant. (The setting of *Pr. 262* to *Pr. 266* are invalid.)

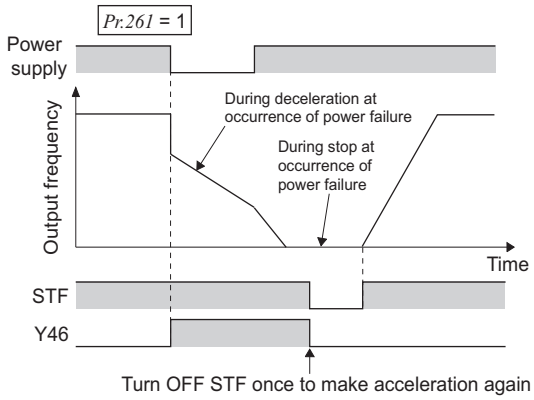

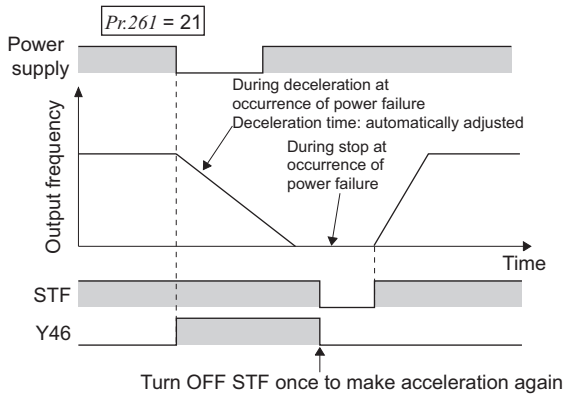

REMARKS

- When automatic restart after instantaneous power failure is selected (*Pr. 57* ≠ "9999"), deceleration to stop function is invalid and the restart after instantaneous power failure operation is performed.
- When the power failure deceleration stop function is active (*Pr. 261* = "1, 21"), the inverter will not start even if the power is turned ON with the start signal (STF/STR) ON. After switching ON the power supply, turn OFF the start signal once and then ON again to make a start.

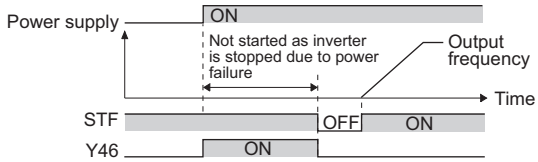

(4) Operation continuation at instantaneous power failure function (*Pr. 261* = "2, 22")

- When power is restored during deceleration after an instantaneous power failure, acceleration is made again up to the set frequency.
- When this function is used in combination with the automatic restart after instantaneous power failure operation, deceleration is available at a power failure and acceleration is available again after power restoration. When power is restored after a stop by deceleration at an instantaneous power failure, automatic restart operation is performed if automatic restart after instantaneous power failure has been selected (*Pr. 57* ≠ "9999")
- At power failure when *Pr. 261* = "22", inverter decelerates to stop automatically by adjusting the deceleration time to make converter voltage (DC bus) constant. If the power supply recovers, inverter accelerates again to the set frequency.
- The setting of *Pr. 262* to *Pr. 266* are invalid when *Pr. 261* = "22".

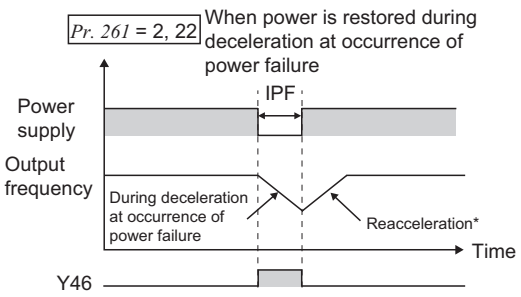

* Acceleration time depends on *Pr. 7* (*Pr. 44*).

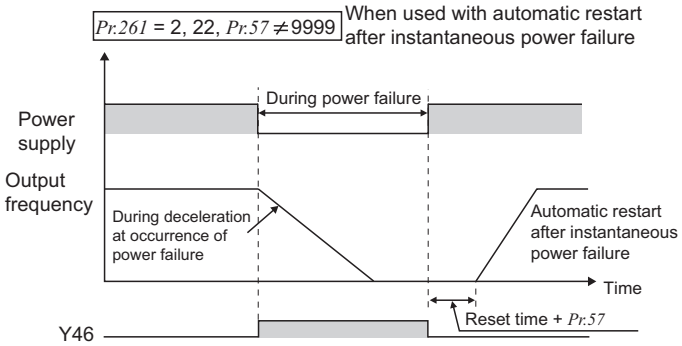

(5) Power failure deceleration signal (Y46 signal)

- After a power failure stop, inverter cannot start even if power is restored and the start command is given. In this case, check the power failure deceleration signal (Y46 signal). (at occurrence of input phase loss protection (E.ILF), etc.)
- The Y46 signal is ON during deceleration at an instantaneous power failure or during a stop after deceleration at an instantaneous power failure.
- For the Y46 signal, set "46 (forward action)" or "146 (reverse action)" in any of *Pr. 190 to Pr. 196 (output terminal function selection)* to assign the function.

REMARKS

- Stop selection function is disabled while inverter decelerates due to a power failure, even though stop selection *(Pr. 250)* is set.

CAUTION

- When *Pr. 30 Regenerative function selection* = "2" (FR-HC, MT-HC, FR-CV is used), the power failure deceleration function is invalid.
- When the (output frequency - *Pr. 262*) at undervoltage or power failure occurrence is negative, the calculation result is regarded as 0Hz. (DC injection brake operation is performed without deceleration).
- During a stop or trip, the power failure stop selection is not performed.
- Y46 signal turns on when undervoltage occurs even when the motor is not decelerating at an instantaneous power failure. For this reason, Y46 signal outputs instantly at powering OFF, which is not a fault.
- When power failure deceleration stop function is selected, undervoltage protection (E.UVT), instantaneous power failure protection (E.IPF), and input phase loss protection (E.ILF) do not function.
- Changing the terminal assignment using *Pr. 190 to Pr. 196 (output terminal function selection)* may affect the other terminals. Please set parameters after confirming the function of each terminal.

⚠ CAUTION

⚠ Even if the power failure stop function is valid, some loads may cause the inverter to trip and the motor to coast. The motor will coast if enough regenerative energy is given from the motor.

♦ Parameters referred to ♦

Pr. 12 DC injection brake operation voltage ☞ *Refer to page 112*
Pr. 20 Acceleration/deceleration reference frequency, Pr. 21 Acceleration/deceleration time increments ☞ *Refer to page 101*
Pr. 30 Regenerative function selection ☞ *Refer to page 114*
Pr. 57 Restart coasting time ☞ *Refer to page 152*
Pr. 190 to Pr. 196 (output terminal function selection) ☞ *Refer to page 128*
Pr. 872 Input phase loss protection selection ☞ *Refer to page 162*

4.13 Operation setting at fault occurrence

Purpose	Parameter that must be Set		Refer to Page
Recover by retry operation at fault occurrence	**Retry operation**	**Pr. 65, Pr. 67 to Pr. 69**	159
Output fault code from terminal	**Fault code output function**	**Pr. 76**	161
Do not input/output phase loss alarm	**Input/output phase loss protection selection**	**Pr. 251, Pr. 872**	162

4.13.1 Retry function (Pr. 65, Pr. 67 to Pr. 69)

If a fault occurs, the inverter resets itself automatically to restart. You can also select the fault for a retry.
When automatic restart after instantaneous power failure is selected (*Pr. 57 Restart coasting time* ≠ "9999"), restart operation is performed at retry operation as at an instantaneous power failure. (*Refer to page 152* for the restart function.)

Parameter Number	Name	Initial Value	Setting Range	Description
65	**Retry selection**	0	0 to 5	A fault for retry can be selected. *(Refer to the next page)*
67	**Number of retries at fault occurrence**	0	0	No retry function
			1 to 10	Set the number of retries at fault occurrence. A fault output is not provided during retry operation.
			101 to 110	Set the number of retries at fault occurrence. (The setting value of minus 100 is the number of retries.) A fault output is provided during retry operation.
68	**Retry waiting time**	1s	0 to 10s	Set the waiting time from when an inverter fault occurs until a retry is made.
69	**Retry count display erase**	0	0	Clear the number of restarts succeeded by retry.

The above parameters can be set when *Pr. 160 User group read selection* = "0". *(Refer to page 190)*

Retry success example

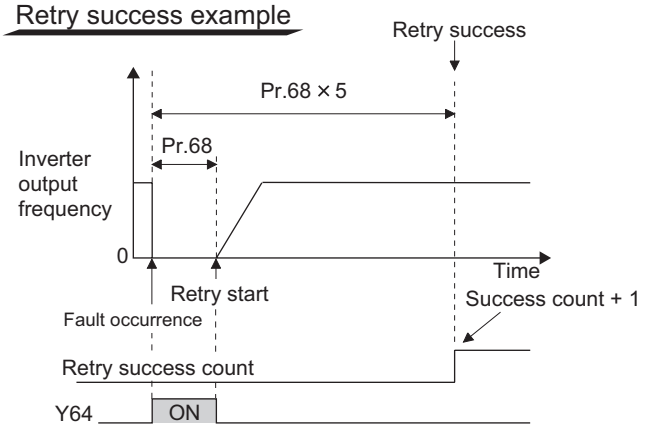

Retry failure example

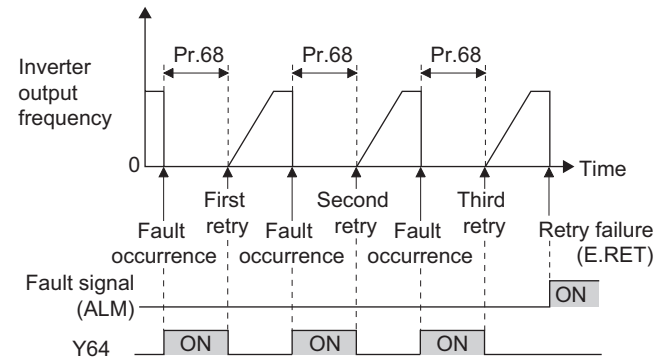

- Retry operation automatically resets a fault and restarts the inverter at the starting frequency when the time set in *Pr. 68* elapses after the inverter is tripped.
- Retry operation is performed by setting *Pr. 67* to any value other than "0". Set the number of retries at fault occurrence in *Pr. 67*.
- When retries fail consecutively more than the number of times set in *Pr. 67*, a retry count excess fault (E.RET) occurs, resulting in inverter trip.
  (Refer to retry failure example)
- Use *Pr. 68* to set the waiting time from when the inverter trips until a retry is made in the range 0 to 10s.
- Reading the *Pr. 69* value provides the cumulative number of successful restart times made by retry. The cumulative count in *Pr. 69* is increased by 1 when a retry is regarded as successful after normal operation continues without faults occurring for more than four times longer than the time set in *Pr. 68* after a retry start.
  (When retry is successful, cumulative number of retry failure is cleared.)
- Writing "0" in *Pr. 69* clears the cumulative count.
- During a retry, the Y64 signal is ON. For the Y64 signal, assign the function by setting "64 (positive operation)" or "164 (negative operation)" in any of *Pr. 190 to Pr. 196 (output terminal function selection)* .

CAUTION

Changing the terminal assignment using *Pr. 190 to Pr. 196 (output terminal function selection)* may affect the other functions. Set parameters after confirming the function of each terminal.

- Use *Pr. 65* to select the fault to be activated for retries. No retry will be made for the fault not indicated. (*Refer to page 334* for the fault description.)
  ● indicates the errors selected for retry.

Fault for Retry	*Pr. 65* Setting					
	0	1	2	3	4	5
E.OC1	●	●		●	●	●
E.OC2	●	●		●	●	
E.OC3	●	●		●	●	●
E.OV1	●		●	●	●	
E.OV2	●		●	●	●	
E.OV3	●		●	●	●	
E.THM	●					
E.THT	●					
E.IPF	●				●	
E.UVT	●				●	
E.BE	●				●	
E. GF	●				●	
E.OHT	●					

Fault for Retry	*Pr. 65* Setting					
	0	1	2	3	4	5
E.OLT	●				●	
E.OPT	●				●	
E.OP1	●				●	
E.OP2	●				●	
E. PE	●				●	
E.PTC	●					
E.CDO	●				●	
E.SER	●				●	
E.ILF	●				●	
E.PID	●				●	
E.PCH	●				●	
E.LCI	●				●	

CAUTION

- For a retry error, only the description of the first fault is stored.
- When an inverter fault is reset by the retry function at the retry time, the accumulated data of the electronic thermal relay function, regenerative brake duty etc. are not cleared. (Different from the power-ON reset.)
- Retry is not performed if E.PE (Parameter storage device fault) occurred at power ON.
- If a fault that is not selected for a retry occurs during retry operation (retry waiting time), the retry operation stops while the fault indication is still displayed.
- The retry function is invalid for the fault initiated by the fault initiation function.

⚠ CAUTION

⚠ When you have selected the retry function, stay away from the motor and machine in the case of the inverter is tripped. The motor and machine will start suddenly (after the reset time has elapsed) after the inverter trip.
When you have selected the retry function, apply in easily visible places the CAUTION stickers supplied.

♦ Parameters referred to ♦

Pr. 57 Restart coasting time ☞ *Refer to page 152*

4.13.2 Fault code output selection (Pr. 76)

At fault occurrence, its description can be output as a 4-bit digital signal from the open collector output terminals. The fault code can be read by a programmable controller, etc., and its corrective action can be shown on a display, etc.

Parameter Number	Name	Initial Value	Setting Range	Description
76	Fault code output selection	0	0	Without fault code output
			1	With fault code output *(Refer to the following table)*
			2	Fault code output at fault occurrence only *(Refer to the following table)*

The above parameters can be set when *Pr. 160 User group read selection* = "0". *(Refer to page 190)*

- By setting *Pr. 76* to "1" or "2", the fault code can be output to the output terminals.
- When the setting is "2", a fault code is output at only fault occurrence, and during normal operation, the terminals output the signals assigned to *Pr. 191 to Pr. 194 (output terminal function selection)*.
- The following table indicates fault codes to be output. (0: output transistor OFF, 1: output transistor ON)

Operation Panel Indication (FR-DU07)	Output of Output Terminals				Fault Code
	SU	IPF	OL	FU	
Normal *	0	0	0	0	0
E.OC1	0	0	0	1	1
E.OC2	0	0	1	0	2
E.OC3	0	0	1	1	3
E.OV1 to E.OV3	0	1	0	0	4
E.THM	0	1	0	1	5
E.THT	0	1	1	0	6
E.IPF	0	1	1	1	7
E.UVT	1	0	0	0	8
E.FIN	1	0	0	1	9
E. BE	1	0	1	0	A
E. GF	1	0	1	1	B
E.OHT	1	1	0	0	C
E.OLT	1	1	0	1	D
E.OPT	1	1	1	0	E
E.OP1	1	1	1	0	E
Other than the above	1	1	1	1	F

* When *Pr. 76* = "2", the output terminals output the signals assigned to *Pr. 191 to Pr. 194* .

CAUTION

- When a value other than "0" is set in *Pr.76*
  When a fault occurs, the output terminals SU, IPF, OL, FU output the signal in the above table, independently of the *Pr. 191 to Pr. 194 (output terminal function selection)* settings. Please be careful when inverter control setting has been made with the output signals of *Pr. 191 to Pr. 194*.

♦ Parameters referred to ♦

Pr. 191 to Pr. 194 (output terminal function selection) ☞ *Refer to page 128*

4.13.3 Input/output phase loss protection selection (Pr. 251, Pr. 872)

You can disable the output phase loss protection function that stops the inverter output if one phase of the inverter output side (load side) three phases (U, V, W) is lost.
The input phase loss protection selection of the inverter input side (R/L1, S/L2, T/L3) can be valid.

Parameter Number	Name	Initial Value	Setting Range	Description
251	Output phase loss protection selection	1	0	Without output phase loss protection
			1	With output phase loss protection
872	Input phase loss protection selection	0	0	Without input phase loss protection
			1	With input phase loss protection

The above parameters can be set when *Pr. 160 User group read selection* = "0". *(Refer to page 190)*

(1) Output phase loss protection selection *(Pr. 251)*

- When *Pr. 251* is set to "0", output phase loss protection (E.LF) becomes invalid.

(2) Input phase loss protection selection *(Pr. 872)*

- When *Pr. 872* is set to "1", input phase loss protection (E.ILF) is provided if a phase loss of one phase among the three phases is detected for 1s continuously.

REMARKS

If input phase is lost when *Pr. 872* = "1" (with input phase loss protection) and *Pr. 261* ≠ "0" (power failure stop function valid), input phase loss protection (E.ILF) is not provided but power-failure deceleration is made.

CAUTION

- When an input phase loss occurs in the R/L1 and S/L2 phases, input phase loss protection is not provided but the inverter output is shut off.
- If an input phase loss continues for a long time, the converter section and capacitor lives of the inverter will be shorter.

♦ Parameters referred to ♦

Pr. 261 Power failure stop selection ☞ *Refer to page 156*

4.14 Energy saving operation and energy saving monitor

Purpose	Parameter that must be Set		Refer to Page
Energy saving operation	**Energy saving operation and Optimum excitation control**	**Pr. 60**	163
How much energy can be saved	**Energy saving monitor**	**Pr. 52, Pr. 54, Pr. 158, Pr. 891 to Pr. 899**	164

4.14.1 Energy saving control and Optimum excitation control (Pr. 60)

Without a fine parameter setting, the inverter automatically performs energy saving control.
This inverter is optimum for fan and pump applications.

Parameter Number	Name	Initial Value	Setting Range	Description
60	**Energy saving control selection ***	0	0	Normal operation mode
			4	Energy saving operation mode
			9	Optimum excitation control mode

* When parameter is read using the FR-PU04, a parameter name different from an actual parameter is displayed.

(1) Energy saving operation mode (Setting "4")

- When "4" is set in *Pr. 60*, the inverter operates in the energy saving operation mode.
- In the energy saving operation mode, the inverter automatically controls the output voltage to minimize the inverter output voltage during a constant operation.

REMARKS

- For applications a large load torque is applied to or machines repeat frequent acceleration/deceleration, an energy saving effect is not expected.

(2) Optimum excitation control mode (Setting "9")

- When "9" is set in *Pr. 60*, the inverter operates in the Optimum excitation control mode.
- The Optimum excitation control mode is a control method which controls excitation current to improve the motor efficiency to maximum and determines output voltage as an energy saving method.

REMARKS

- When the motor capacity is too small as compared to the inverter capacity or two or more motors are connected to the inverter, the energy saving effect is not expected.

CAUTION

- When the energy saving mode and Optimum excitation control mode are selected, deceleration time may be longer than the setting value. Since overvoltage fault tends to occur as compared to the constant-torque load characteristics, set a longer deceleration time.
- Since output voltage is controlled in energy saving operation mode and by Optimum excitation control, output current may slightly increase.

♦ Parameters referred to

Pr. 80 Motor capacity ☞ *Refer to page 79*

4.14.2 Energy saving monitor (Pr. 891 to Pr. 899)

From the power consumption estimated value during commercial power supply operation, the energy saving effect by use of the inverter can be monitored/output.

Parameter Number	Name	Initial Value	Setting Range 200V class (400V class)		Description
52	DU/PU main display data selection	0 (output frequency)	0, 5, 6, 8 to 14, 17, 20, 23 to 25, 50 to 57, 67, 81 to 86, 100		50: Power saving monitor 51: Cumulative saving power monitor
54	CA terminal function selection	1 (output frequency)	1 to 3, 5, 6, 8 to 14, 17, 21, 24, 50, 52, 53, 67, 70, 85		50: Power saving monitor
158	AM terminal function selection		1 to 3, 5, 6, 8 to 14, 17, 21, 24, 50, 52, 53, 67, 70, 86		
891	Cumulative power monitor digit shifted times	9999	0 to 4		Set the number of times to shift the cumulative power monitor digit Clamps the monitor value at maximum.
			9999		No shift Clears the monitor value when it exceeds the maximum value.
892	Load factor	100%	30 to 150%		Set the load factor for commercial power supply operation. Multiplied by the power consumption rate *(page 167)* during commercial power supply operation.
893	Energy saving monitor reference (motor capacity)	SLD/LD value of Applied motor Capacity	02330 (01160) or less	0.1 to 55kW	Set the motor capacity (pump capacity). Set when calculating power saving rate, power saving rate average value, commercial operation power.
			03160 (01800) or more	0 to 3600kW	
894	Control selection during commercial power-supply operation	0	0		Discharge damper control (fan)
			1		Inlet damper control (fan)
			2		Valve control (pump)
			3		Commercial power-supply drive (fixed value)
895	Power saving rate reference value	9999	0		Consider the value during commercial power-supply operation as 100%
			1		Consider the *Pr. 893* setting as 100%.
			9999		No function
896	Power unit cost	9999	0 to 500		Set the power unit cost. Displays the power saving amount charge on the energy saving monitor.
			9999		No function
897	Power saving monitor average time	9999	0		Average for 30 minutes
			1 to 1000h		Average for the set time
			9999		No function
898	Power saving cumulative monitor clear	9999	0		Cumulative monitor value clear
			1		Cumulative monitor value hold
			10		Accumulation continued (communication data upper limit 9999)
			9999		Accumulation continued (communication data upper limit 65535)
899	Operation time rate (estimated value)	9999	0 to 100%		Use for calculation of annual power saving amount. Set the annual operation ratio (consider 365 days × 24hr as 100%).
			9999		No function

The above parameters can be set when *Pr. 160 User group read selection* = "0". *(Refer to page 190)*
The above parameters allow its setting to be changed during operation in any operation mode even if "0" (initial value) is set in *Pr. 77 Parameter write selection*.

(1) Energy saving monitor list

· The following items are monitored by the power saving monitor (*Pr. 52, Pr. 54, Pr. 158* = "50").
(Only 1) Power saving and 3) Power saving average value can be output to *Pr. 54* (terminal CA) and *Pr. 158* (terminal AM))

	Energy Saving Monitor Item	Description and Formula	Unit	Parameter Setting			
				Pr. 895	*Pr. 896*	*Pr. 897*	*Pr. 899*
1)	**Power saving**	Difference between the estimated value of power necessary for commercial power supply operation and the input power calculated by the inverter **Power during commercial power supply operation – input power monitor**	0.01kW/ 0.1kW *3	9999	—	9999	—
2)	**Power saving rate**	Ratio of power saving on the assumption that power during commercial power supply operation is 100% $\frac{\text{1) Power saving}}{\text{Power during commercial power supply operation}} \times 100$	0.1%	0			
		Ratio of power saving on the assumption that *Pr. 893* is 100% $\frac{\text{1) Power saving}}{Pr.\ 893} \times 100$		1			
3)	**Power saving average value**	Average value of power saving amount per hour during predetermined time (*Pr. 897*) $\frac{\Sigma(\text{1) Power saving} \times \Delta t)}{Pr.\ 897}$	0.01kWh /0.1kWh *3	9999	9999	0 to 1000h	
4)	**Power saving rate average value**	Ratio of power saving average value on the assumption that the value during commercial power supply operation is 100% $\frac{\Sigma(\text{2) Power saving rate} \times \Delta t)}{Pr.\ 897} \times 100$	0.1%	0			
		Ratio of power saving average value on the assumption that *Pr. 893* is 100% $\frac{\text{3) Power saving average value}}{Pr.\ 893} \times 100$		1			
5)	**Power saving amount average value**	Power saving average value represented in terms of charge **3) Power saving average value** × ***Pr. 896***	0.01/0.1 *3	—	0 to 500		

· The following shows the items which can be monitored by the cumulative saving power monitor (*Pr. 52* = "51").
(The monitor value of the cumulative monitor can be shifted to the right with *Pr. 891 Cumulative power monitor digit shifted times*.)

	Energy Saving Monitor Item	Description and Formula	Unit	Parameter Setting			
				Pr. 895	*Pr. 896*	*Pr. 897*	*Pr. 899*
6)	**Power saving amount**	Power saving is added up per hour. $\Sigma(\text{1) Power saving} \times \Delta t)$	0.01kWh /0.1kWh *1*2*3	—	9999	—	9999
7)	**Power saving amount charge**	Power saving amount represented in terms of charge **6) Power saving amount** × ***Pr. 896***	0.01/0.1 *1*3	—	0 to 500		
8)	**Annual power saving amount**	Estimated value of annual power saving amount $\frac{\text{6) Power saving amount}}{\text{Operation time during accumulation of power saving amount}} \times 24 \times 365 \times \frac{Pr.\ 899}{100}$	0.01kWh /0.1kWh *1*2*3	—	9999		0 to 100%
9)	**Annual power saving amount charge**	Annual power saving amount represented in terms of charge **8) Annual power saving amount** × ***Pr. 896***	0.01/0.1 *1*3	—	0 to 500		

*1 For communication (RS-485 communication, communication option), the display increments are 1. For example, 10.00kWh indicates that communication data is 10.
*2 When using the parameter unit (FR-PU04/FR-PU07), "kW" is displayed.
*3 The setting depends on capacities. (FR-F720-02330 (FR-F740-01160) or less/FR-F720-03160 (FR-F740-01800) or more)

REMARKS

· Since four digits are displayed on the operation panel (FR-DU07), the value is displayed in 0.1 increments when a monitor value in 0.01 increments exceeds 99.99, then rounded up to 100.0. The maximum display is "9999".
· As the operation panel (FR-PU04/FR-PU07) is 5-digit display, it displays in 0.1 increments since a carry occurs, e.g. "1000.0", when a monitor value in 0.01 increments exceeds "999.99". The maximum display is "99999".
· The upper limit of communication (RS-485 communication, communication option) is "65535" when *Pr. 898 Power saving cumulative monitor clear* = "9999". The upper limit of 0.01 increments monitor is "655.35" and that of 0.1 increments monitor is "6553.5".

(2) Power saving instantaneous monitor (1) power savings, 2) power saving rate)

- On the power saving monitor (1)), an energy saving effect as compared to the power consumption during commercial power supply operation (estimated value) is calculated and displays on the main monitor.
- In the following case, the power saving monitor (1)) is "0".
  (a)Calculated values of the power saving monitor are negative values.
  (b)During the DC injection brake operation
  (c)Motor is not connected (output current monitor is 0A)
- On the power saving rate monitor (2)), setting "0" in *Pr. 895 Power saving rate reference value* displays the power saving rate on the assumption that power (estimated value) during commercial power supply operation is 100%. When *Pr. 895* = "1", the power saving rate on the assumption that the *Pr. 893 Energy saving monitor reference (motor capacity)* value is 100% is displayed.

(3) Power saving average value monitor (3) power saving average value, 4) average power saving rate average value, 5) power saving amount average value)

- Power saving average value monitor is displayed by setting a value other than "9999" in *Pr. 897 Power saving monitor average time*.
- The power saving average value monitor (3)) displays the unit time average value of the power saving amount at averaging.
- The average value is updated every time an average time has elapsed after the *Pr. 897* setting is changed, power is turned ON or the inverter is reset, assuming as a starting point. The power savings average value update timing signal (Y92) is inverted every time the average value is updated.

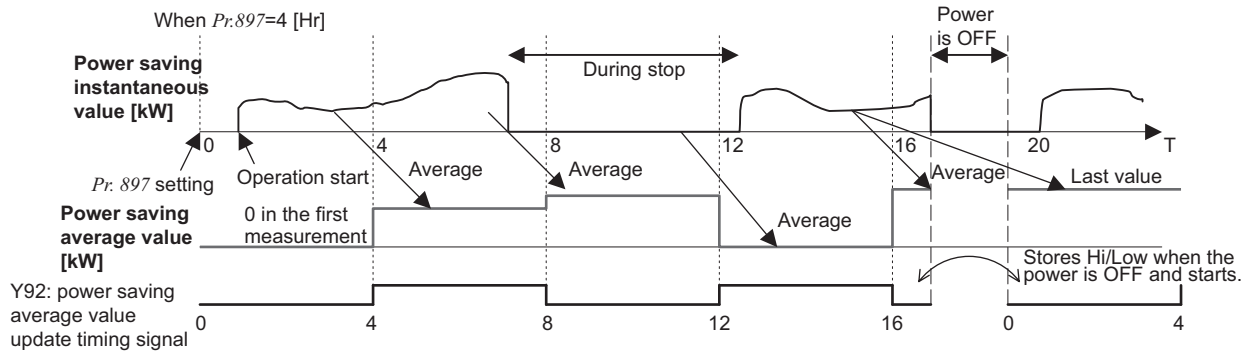

- The power saving average value monitor (4)) displays the average value per unit time of power saving rate (2)) at every average time by setting "0" or "1" in *Pr. 895 Power saving rate reference value*.
- By setting the charge (power unit) per 1kWh of power amount in *Pr. 896 Power unit cost*, the power saving amount average value monitor (5)) displays the charge relative to the power saving average value (power saving average value (3)) × *Pr. 896*).

(4) Cumulative saving power monitor (6) power saving amount, 7) power saving amount charge, 8) annual power saving amount, 9) annual power saving amount charge)

- On the cumulative saving power monitor, the monitor data digit can be shifted to the right by the number of *Pr. 891 Cumulative power monitor digit shifted times* settings. For example, if the cumulative power value is 1278.56kWh when *Pr. 891* = "2", the PU/DU display is 12.78 (display in 100kWh increments) and the communication data is 12. If the maximum value is exceeded at *Pr. 891* = "0 to 4", the power is clamped at the maximum value, indicating that a digit shift is necessary. If the maximum value exceeded at *Pr. 891* = "9999", the power returns to 0 and is recounted. The other monitors are clamped at the display maximum value.
- The cumulative saving power monitor (6)) can measure the power amount during a predetermined period. Measure according to the following steps
  1) Write "9999" or "10" in *Pr. 898 Power saving cumulative monitor clear*.
  2) Write "0" in *Pr. 898* at measurement start timing to clear the cumulative saving power monitor value and start accumulation of power saving.
  3) Write "1" in *Pr. 898* at measurement end timing to hold the cumulative saving power monitor value.

REMARKS

- The cumulative saving power monitor value is stored every hour. Hence, when the power supply is switched OFF within one hour, and switched ON again, the previously stored monitor value is displayed and accumulation starts. (The cumulative monitor value may decrease)

(5) Power estimated value of commercial power supply operation *(Pr. 892, Pr. 893, Pr. 894)*

- Select the commercial power supply operation pattern from among the four patterns of discharge damper control (fan), inlet damper control (fan), valve control (pump) and commercial power supply drive, and set it to *Pr. 894 Control selection during commercial power-supply operation*.
- Set the motor capacity (pump capacity) in *Pr. 893 Energy saving monitor reference (motor capacity)*.
- The power consumption rate (%) during commercial power supply operation is estimated from the operation pattern and the ratio of speed to rating (current output frequency/*Pr. 3 Base frequency*) in the following chart.

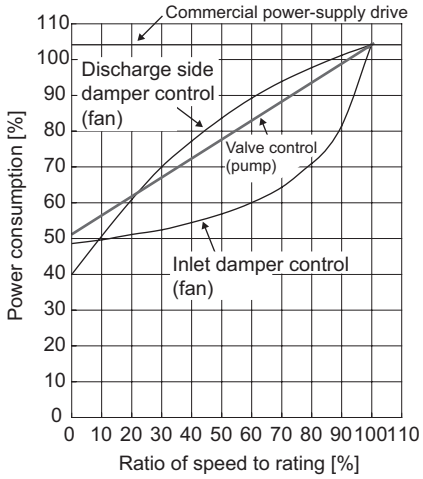

- From the motor capacity set in *Pr. 893* and *Pr. 892 Load factor*, the power estimated value (kW) during commercial power supply operation is found by the following formula.

Power estimated value (kW) during commercial power supply operation

$$= Pr.\ 893\ (\text{kW}) \times \frac{\text{Power consumption (\%)}}{100} \times \frac{Pr.\ 892\ (\%)}{100}$$

REMARKS

- Since the speed does not increase above the power supply frequency in commercial power supply operation, it becomes constant when the output frequency rises to or above *Pr. 3 Base frequency*.

(6) Annual power saving amount, power charge *(Pr. 899)*

- By setting the operation time rate [%] (ratio of time when the motor is actually driven by the inverter during a year) in *Pr. 899*, the annual energy saving effect can be predicted.
- When the operation pattern is predetermined to some degree, the estimated value of the annual power saving amount can be found by measurement of the power saving amount during a given measurement period.
- Refer to the following and set the operation time rate.
  1) Predict the average time [h/day] of operation in a day.
  2) Find the annual operation days [days/year]. (Monthly average operation days × 12 months)
  3) Calculate the annual operation time [h/year] from 1) and 2).

Annual operation time (h/year) = Average time (h/day) × Operation days (days/year)

4) Calculate the operation time rate and set it to *Pr. 899*.

$$\text{Operation time rate (\%)} = \frac{\text{Annual operation time (h/year)}}{\text{24 (h/day) x 365 (days/year)}} \times 100(\%)$$

REMARKS

- Operation time rate setting example: When operation is performed for about 21 hours per day and the monthly average operation days are 16 days
  Annual operation time = 21 (h/day) × 16 (days/month) × 12 months = 4032 (h/year)
  $$\text{Operation time rate (\%)} = \frac{\text{4032 (h/year)}}{\text{24 (h/day)} \times \text{365 (days/year)}} \times 100(\%) = 46.03\%$$
  Set 46.03% to *Pr. 899*.

- Calculate the annual power saving amount from *Pr. 899 Operation time rate (estimated value)* and power saving average value monitor

$$\text{Annual power saving amount (kWh/year)} = \begin{matrix}\text{Power saving average value} \\ \text{(kW) during accumulation} \\ \text{when } Pr.\ 898 = 10 \text{ or } 9999\end{matrix} \times 24\text{h} \times 365 \text{ days} \times \frac{Pr.\ 899}{100}$$

- The annual power saving amount charge can be monitored by setting the power charge per hour in *Pr. 896 Power unit cost*.
  Calculate the annual power saving amount charge in the following method.

Annual power saving amount charge = Annual power saving amount (kWh/year) × *Pr. 896*

REMARKS

In the regeneration mode, make calculation on the assumption that "power saving = power during commercial power supply operation (input power = 0)".

♦ Parameters referred to ♦

Pr. 3 Base frequency ☞ *Refer to page 89*
Pr. 52 DU/PU main display data selection ☞ *Refer to page 141*
Pr. 54 CA terminal function selection ☞ *Refer to page 147*
Pr. 158 AM terminal function selection ☞ *Refer to page 147*

4.15 Motor noise, EMI measures, mechanical resonance

Purpose	Parameter that must be Set		Refer to Page
Reduction of the motor noise Measures against EMI and leakage currents	**Carrier frequency and Soft-PWM selection**	**Pr. 72, Pr. 240, Pr. 260**	169
Reduce mechanical resonance	**Speed smoothing control**	**Pr. 653, Pr. 654**	170

4.15.1 PWM carrier frequency and Soft-PWM control (Pr. 72, Pr. 240, Pr. 260)

You can change the motor sound.

Parameter Number	Name	Initial Value	Setting Range 200V class (400V class)		Description
72 *	**PWM frequency selection**	2	02330 (01160) or less	0 to 15	PWM carrier frequency can be changed. The setting displayed is in [kHz]. Note that 0 indicates 0.7kHz, 15 indicates 14.5kHz and 25 indicates 2.5kHz. (25 is exclusively for a sine wave filter.)
			03160 (01800) or more	0 to 6, 25	
240 *	**Soft-PWM operation selection**	1	0		Soft-PWM is invalid
			1		When *Pr. 72* = "0 to 5" ("0 to 4" for FR-F720-03160 (FR-F740-01800) or more), soft-PWM is valid.
260	**PWM frequency automatic switchover**	1	0		PWM carrier frequency is constant independently of load. When the carrier frequency is set to 3kHz or more (*Pr. 72* ≥ "3"), perform continuous operation at less than 85% of the rated inverter current.
			1		Decreases PWM carrier frequency automatically when load increases.

The above parameters can be set when *Pr. 160 User group read selection* = "0". *(Refer to page 190.)*

* The above parameters allow its setting to be changed during operation in any operation mode even if "0" (initial value) is set in *Pr. 77 Parameter write selection*.

(1) PWM carrier frequency changing *(Pr. 72)*

- You can change the PWM carrier frequency of the inverter.
- Changing the PWM carrier frequency produces an effect on avoiding the resonance frequency of a mechanical system or motor or on EMI measures or on leakage current reduction caused by the PWM switching.
- When using an option sine wave filter (MT-BSL/BSC) for the FR-F720-03160 (FR-F740-01800) or more, set "25"(2.5kHz) in *Pr. 72*.

(2) Soft-PWM control *(Pr. 240)*

- Soft-PWM control is a control method that changes the motor noise from a metallic tone into an unoffending complex tone.

(3) PWM carrier frequency automatic reduction function *(Pr. 260)*

- If continuous operation is performed at 85% or higher of the rated inverter current (the value in the parenthesis on page *370*) with *Pr.260* = "1 (initial setting)" and *Pr.72* ≥ "3 (inverter carrier frequency is set to 3kHz is higher)," E.THT (Inverter overload trip) is likely to occur. To avoid that, the carrier frequency is automatically lowered to as low as 2kHz. (Motor noise increases, but not to the point of failure)
- When *Pr. 260* is set to"0", the carrier frequency becomes constant (*Pr. 72* setting) independently of the load, making the motor sound uniform.
  Note that continuous operation should be performed at less than 85% of the inverter rating.

CAUTION

- Decreasing the PWM carrier frequency effect on EMI measures and on leakage current reduction, but increases motor noise.
- When *Pr. 570* = "0" (initial value), functions of *Pr. 260* become invalid. PWM carrier frequency automatically decreases when load increases. *(Refer to page 86.)*
- When PWM carrier frequency is set to 1kHz or less (*Pr. 72*≤1), fast-response current limit may function prior to stall prevention operation due to increase in ripple currents, resulting in insufficient torque. In such case, set fast-response current limit operation invalid using *Pr. 156 Stall prevention operation selection*.

♦ Parameters referred to ♦

Pr.156 Stall prevention operation selection ☞ *Refer to page 81*

4.15.2 Speed smoothing control (Pr. 653, Pr. 654)

Vibration due to mechanical resonance influences the inverter control, causing the output current (torque) to be unstable. In this case, the output current (torque) fluctuation can be reduced to ease vibration by changing the output frequency.

Parameter Number	Name	Initial Value	Setting Range	Description
653 Ver.UP	Speed smoothing control	0	0 to 200%	The torque fluctuation is reduced to reduce vibration due to mechanical resonance.
654 Ver.UP	Speed smoothing cutoff frequency	20Hz	0 to 120Hz	Set the minimum value for the torque variation cycle (frequency).

The above parameters can be set when *Pr. 160 User group read selection* = "0". *(Refer to page 190)*

Ver.UP ….Specifications differ according to the date assembled. *Refer to page 400* to check the SERIAL number.

(1) Control block diagram

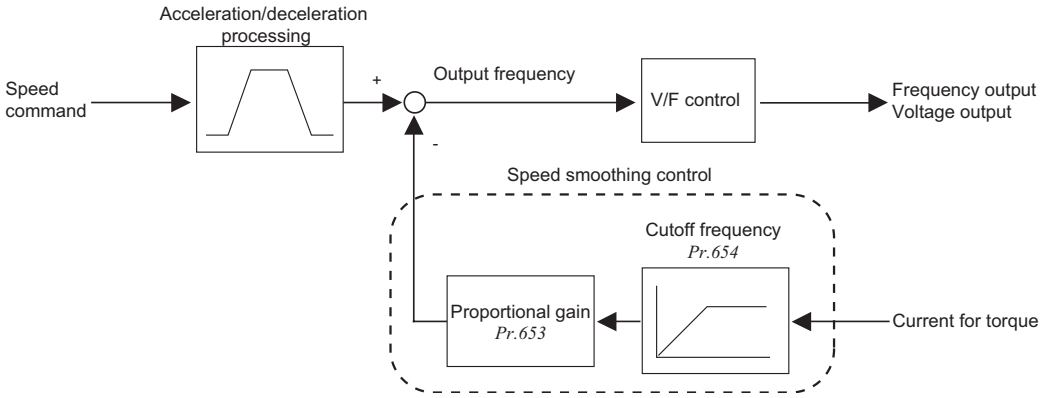

(2) Setting method

If vibration due to mechanical resonance occurs, set 100% in *Pr. 653*, run the inverter at the frequency which generates maximum vibration and check if the vibration will be reduced or not after several seconds.

If effect is not produced, gradually increase the *Pr. 653* setting and check the effect repeatedly until the most effective value is set in *Pr. 653*.

If vibration becomes large by increasing the *Pr. 653* setting, gradually decrease the *Pr. 653* setting from 100% to check the effect in a similar manner.

When the vibrational frequency due to the mechanical resonance (fluctuation of torque, speed, and converter output voltage) is known using a tester and such, set 1/2 to 1 time of the vibrational frequency to *Pr.654*. (Setting vibrational frequency range can suppress the vibration better.)

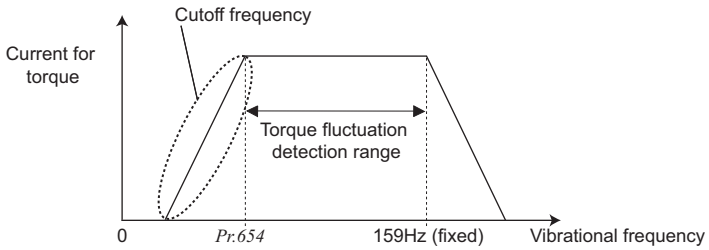

CAUTION

- Depending on the machine, vibration may not be reduced enough or an effect may not be produced.

4.16 Frequency setting by analog input (terminal 1, 2, 4)

Purpose	Parameter that must be Set		Refer to Page
Selection of voltage/current input (terminal 1, 2, 4) Perform forward/ reverse rotation by analog input.	**Analog input selection**	**Pr. 73, Pr. 267**	171
Adjust the main speed by analog auxiliary input.	**Analog auxiliary input and compensation (added compensation and override function)**	**Pr. 73, Pr. 242, Pr. 243, Pr. 252, Pr. 253**	175
Noise elimination at the analog input	**Input filter**	**Pr. 74**	176
Adjustment (calibration) of analog input frequency and voltage (current)	**Bias and gain of frequency setting voltage (current)**	**Pr. 125, Pr. 126, Pr. 241, C2 to C7 (Pr. 902 to Pr. 905)**	177

4.16.1 Analog input selection (Pr. 73, Pr. 267)

You can select the function that switches between forward rotation and reverse rotation according to the analog input terminal selection specifications, the override function and the input signal polarity.

Parameter Number	Name	Initial Value	Setting Range	Description	
				Voltage/current input switch	
73	**Analog input selection**	1	0 to 5, 10 to 15	Switch 2 - OFF (initial status)	You can select the input specifications of terminal 2 (0 to 5V, 0 to 10V, 0 to 20mA) and input specifications of terminal 1 (0 to ±5V, 0 to ±10V). Override and reversible operation can be selected.
			6, 7, 16, 17	Switch 2 - ON	
267	**Terminal 4 input selection**	0	0	Switch 1 - ON (initial status)	Terminal 4 input 4 to 20mA
			1	Switch 1 - OFF	Terminal 4 input 0 to 5V
			2		Terminal 4 input 0 to 10V

The above parameters can be set when *Pr. 160 User group read selection* = "0". *(Refer to page 190)*

(1) Selection of analog input selection

· For the terminals 2, 4 used for analog input, voltage input (0 to 5V, 0 to 10V) or current input (4 to 20mA) can be selected.
Change parameters (*Pr.73, Pr.267*) and a voltage/current input switch (switch 1, 2) to change input specifications.

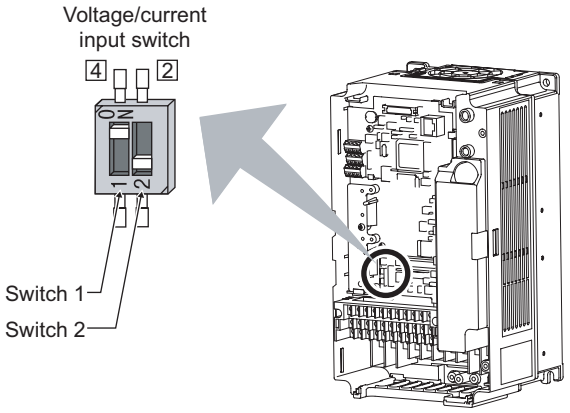

Switch 1:Terminal 4 input
ON: Current input (initial status)
OFF: Voltage input

Switch 2: Terminal 2 input
ON: Current input
OFF: Voltage input (initial status)

· Rated specifications of terminal 2 and 4 change according to the voltage/current input switch setting.
Voltage input: Input resistance 10kΩ ± 1kΩ, Maximum permissible voltage 20VDC
Current input: Input resistance 245Ω ± 5Ω, Maximum permissible current 30mA

CAUTION

· Set *Pr. 73, Pr. 267*, and a voltage/current input switch correctly, then input an analog signal in accordance with the setting. Incorrect setting as in the table below could cause component damage. Incorrect settings other than below can cause abnormal operation.

Setting Causing Component Damage		Operation
Switch setting	Terminal input	
ON (Current input)	Voltage input	This could cause component damage to the analog signal output circuit of signal output devices. (electrical load in the analog signal output circuit of signal output devices increases)
OFF (Voltage input)	Current input	This could cause component damage of the inverter signal input circuit. (output power in the analog signal output circuit of signal output devices increases)

Frequency setting by analog input (terminal 1, 2, 4)

· Refer to the following table and set *Pr. 73* and *Pr. 267*. (indicates the main speed setting)

AU signal	Terminal 4 Input		*Pr. 73* Setting	Terminal 2 Input	Terminal 1 Input	Compensation Input Terminal and Compensation Method	Polarity Reversible
OFF	—		0	0 to 10V	0 to ±10V	Terminal 1 Added compensation	No (Indicates that a frequency command signal of negative polarity is not accepted.)
			1 (initial value)	0 to to 5V	0 to ±10V		
			2	0 to 10V	0 to ±5V		
			3	0 to 5V	0 to ±5V		
			4	0 to 10V	0 to ±10V	Terminal 2 Override	
			5	0 to 5V	0 to ±5V		
			6	0 to 20mA	0 to ±10V	Terminal 1 Added compensation	
			7	0 to 20mA	0 to ±5V		
			10	0 to 10V	0 to ±10V		Yes
			11	0 to 5V	0 to ±10V		
			12	0 to 10V	0 to ±5V		
			13	0 to 5V	0 to ±5V		
			14	0 to 10V	0 to ±10V	Terminal 2 Override	
			15	0 to 5V	0 to ±5V		
			16	0 to 20mA	0 to ±10V	Terminal 1 Added compensation	
			17	0 to 20mA	0 to ±5V		
ON	*Pr. 267* setting		0	—	0 to ±10V	Terminal 1 Added compensation	No (Indicates that a frequency command signal of negative polarity is not accepted.)
	0 (initial value)	4 to 20mA	1 (initial value)		0 to ±10V		
			2		0 to ±5V		
			3		0 to ±5V		
			4	0 to 10V	—	Terminal 2 Override	
	1	1 to 5V *	5	0 to 5V			
			6	—	0 to ±10V	Terminal 1 Added compensation	
			7		0 to ±5V		
			10		0 to ±10V		Yes
			11		0 to ±10V		
	2	2 to 10V *	12		0 to ±5V		
			13		0 to ±5V		
			14	0 to 10V	—	Terminal 2 Override	
			15	0 to 5V			
			16	—	0 to ±10V	Terminal 1 Added compensation	
			17		0 to ±5V		

— : Invalid

* If the input specification to terminal 4 is changed from the current input (*Pr. 267* = "0") to the 0 to 5V or 0 to 10V voltage input (*Pr. 267* ="1 or 2"), calibrate the input with C6. *(Refer to page 177)*

· Set the voltage/current input switch referring to the table below.

(indicates an initial value.)

Terminal 2 Input Specifications	*Pr. 73* Setting	Switch 2
Voltage input (0 to 10V)	0, 2, 4, 10, 12, 14	OFF
Voltage input (0 to 5V)	1 (initial value), 3, 5, 11, 13, 15	OFF
Current input (0 to 20mA)	6, 7, 16, 17	ON

Terminal 4 Input Specifications	*Pr. 267* Setting	Switch 1
Voltage input (0 to 10V)	2	OFF
Voltage input (0 to 5V)	1	OFF
Current input (0 to 20mA)	0 (initial value)	ON

CAUTION

· Turn the AU signal ON to make terminal 4 valid.
· Match the setting of parameter and switch. A different setting may cause a fault, failure or malfunction.
· The terminal 1 (frequency setting auxiliary input) signal is added to the main speed setting signal of the terminal 2 or 4.
· When an override is selected, the terminal 1 or 4 is used for the main speed setting and the terminal 2 for the override signal (50% to 150% at 0 to 5V or 0 to 10V). (When the main speed of the terminal 1 or terminal 4 is not input, compensation by the terminal 2 is invalid.))
· Use *Pr. 125 (Pr. 126) (frequency setting gain)* to change the maximum output frequency at input of the maximum output frequency command voltage (current). At this time, the command voltage (current) need not be input.
Also, the acceleration/deceleration time, which is a slope up/down to the acceleration/deceleration reference frequency, is not affected by the change in *Pr. 73* setting.
· When *Pr. 22 Stall prevention operation level* = "9999", the value of the terminal 1 is as set to the stall prevention operation level.

(2) Perform operation by analog input voltage

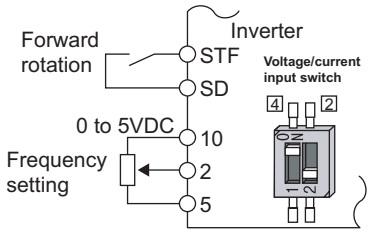

Connection diagram using terminal 2 (0 to 5VDC)

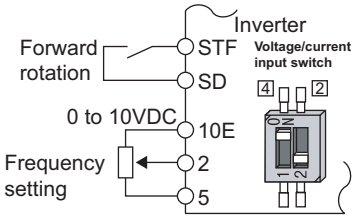

Connection diagram using terminal 2 (0 to 10VDC)

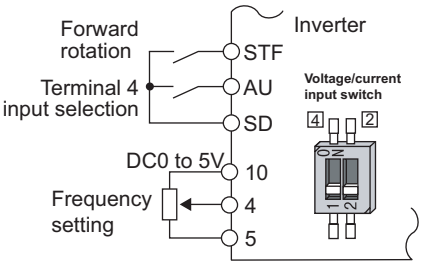

Connection diagram using terminal 4 (0 to 5VDC)

- The frequency setting signal inputs 0 to 5VDC (or 0 to 10VDC) to across the terminals 2 and 5. The 5V (10V) input is the maximum output frequency. The maximum output frequency is reached when 5V (10V) is input.
- The power supply 5V (10V) can be input by either using the internal power supply or preparing an external power supply. The internal power supply outputs 5VDC across terminals 10 and 5, or 10V across terminals 10E and 5.

Terminal	Inverter Built-in Power Supply Voltage	Frequency Setting Resolution	*Pr. 73* (terminal 2 input voltage)
10	5VDC	0.030Hz/60Hz	0 to 5VDC input
10E	10VDC	0.015Hz/60Hz	0 to 10VDC input

- When inputting 10VDC to the terminal 2, set any of "0, 2, 4, 10, 12, 14" in *Pr. 73*. (The initial value is 0 to 5V)

- Setting "1 (0 to 5VDC)" or "2 (0 to 10VDC)" in *Pr. 267* changes the terminal 4 to the voltage input specification. When the AU signal turns ON, the terminal 4 input becomes valid.

REMARKS

The wiring length of the terminal 10, 2, 5 should be 30m (98.4 feet) maximum.

(3) Perform operation by analog input current

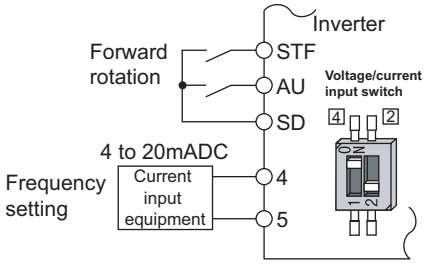

Connection diagram using terminal 4 (4 to 20mADC)

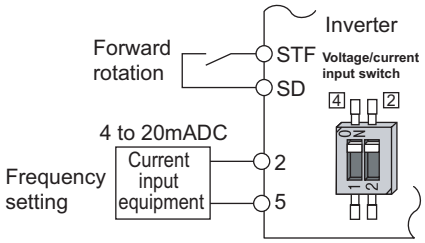

Connection diagram using terminal 2 (4 to 20mADC)

- When the pressure or temperature is controlled constant by a fan, pump, etc., automatic operation can be performed by inputting the output signal 4 to 20mADC of the adjuster to across the terminals 4 and 5.
- The AU signal must be turned ON to use the terminal 4.

- Setting any of "6, 7, 16, 17" in *Pr. 73* changes the terminal 2 to the current input specification. At this time, the AU signal need not be turned ON.

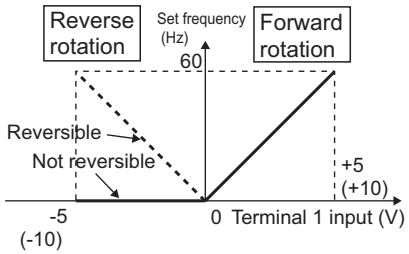

Compensation input characteristic when STF is ON

(4) Perform forward/reverse rotation by analog input (polarity reversible operation)

- Setting any of "10 to 17" in *Pr. 73* enables polarity reversible operation.
- Providing ± input (0 to ±5V or 0 to ±10V) to the terminal 1 enables forward/reverse rotation operation according to the polarity.

♦ Parameters referred to ♦

Pr. 22 Stall prevention operation level ☞ *Refer to page 81*
Pr. 125 Terminal 2 frequency setting gain frequency, Pr. 126 Terminal 4 frequency setting gain frequency ☞ *Refer to page 177*
Pr. 252, Pr. 253 Override bias/gain ☞ *Refer to page 175*

4.16.2 Analog input compensation (Pr. 73, Pr. 242, Pr. 243, Pr. 252, Pr. 253)

A fixed ratio of analog compensation (override) can be made by the added compensation or terminal 2 as an auxiliary input for multi-speed operation or the speed setting signal (main speed) of the terminal 2 or terminal 4.

Parameter Number	Name	Initial Value	Setting Range	Description
73	Analog input selection	1	0 to 3, 6, 7, 10 to 13, 16, 17	Added compensation
			4, 5, 14, 15	Override compensation
242	Terminal 1 added compensation amount (terminal 2)	100%	0 to 100%	Set the ratio of added compensation amount when terminal 2 is the main speed.
243	Terminal 1 added compensation amount (terminal 4)	75%	0 to 100%	Set the ratio of added compensation amount when terminal 4 is the main speed.
252	Override bias	50%	0 to 200%	Set the bias side compensation value of override function.
253	Override gain	150%	0 to 200%	Set the gain side compensation value of override function.

The above parameters can be set when *Pr. 160 User group read selection* = "0". *(Refer to page 190)*

(1) Added compensation *(Pr. 242, Pr. 243)*

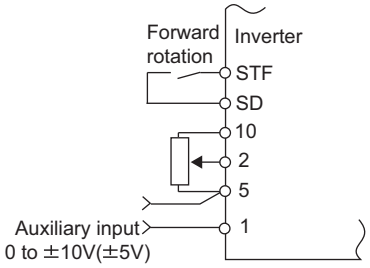

Added compensation connection example

- The compensation signal can be input for the main speed setting for synchronous/continuous speed control operation, etc.
- Setting any of "0 to 3, 6, 7, 10 to 13, 16, 17" in *Pr. 73* adds the voltage across terminals 1 and 5 to the voltage signal across terminals 2-5.
- If the result of addition is negative, it is regarded as 0 at the *Pr. 73* setting of any of "0 to 3, 6, 7", or reverse rotation operation (polarity reversible operation) is performed when the STF signal turns ON at the *Pr. 73* setting of any of "10 to 13, 16, 17".
- The compensation input of the terminal 1 can also be added to the multi-speed setting or terminal 4 (initial value 4 to 20mA).
- The added compensation for terminal 2 can be adjusted by *Pr. 242*, and the compensation for terminal 4 by *Pr. 243*.

Analog command value using terminal 2

$$= \text{Terminal 2 input} + \text{Terminal 1 input} \times \frac{Pr.\ 242}{100(\%)}$$

Analog command value using terminal 4

$$= \text{Terminal 4 input} + \text{Terminal 1 input} \times \frac{Pr.\ 243}{100(\%)}$$

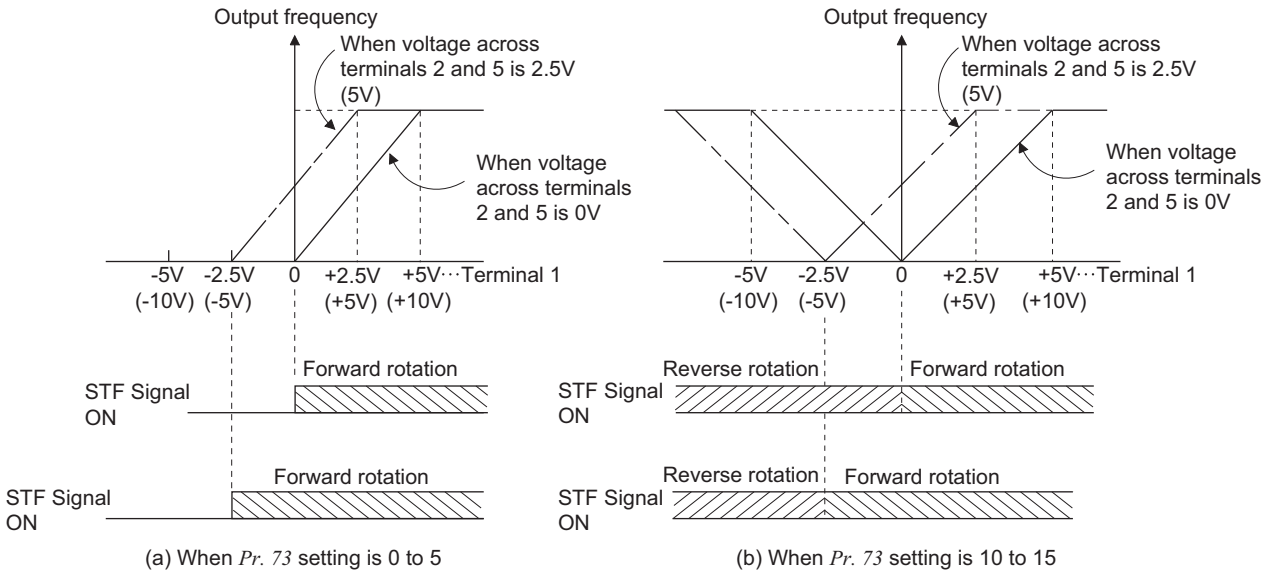

(a) When *Pr. 73* setting is 0 to 5

(b) When *Pr. 73* setting is 10 to 15

Auxiliary input characteristics

(2) Override function *(Pr. 252, Pr. 253)*

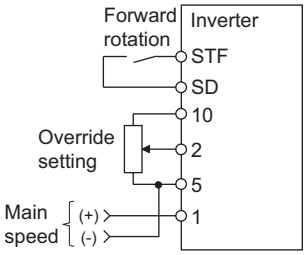

Override connection diagram

- Use the override function to change the main speed at a fixed ratio.
- Set any of "4, 5, 14, 15" in *Pr. 73* to select an override.
- When an override is selected, the terminal 1 or terminal 4 is used for the main speed setting and the terminal 2 for the override signal. (When the main speed of the terminal 1 or terminal 4 is not input, compensation made by the terminal 2 becomes invalid.)
- Using *Pr. 252* and *Pr. 253*, set the override range.
- How to find the set frequency for override

$$\text{Set frequency (Hz)} = \text{Main speed set frequency (Hz)} \times \frac{\text{Compensation amount (\%)}}{100(\%)}$$

Main speed set frequency (Hz): Terminal 1, 4 input, multi-speed setting
Compensation amount (%): Terminal 2 input

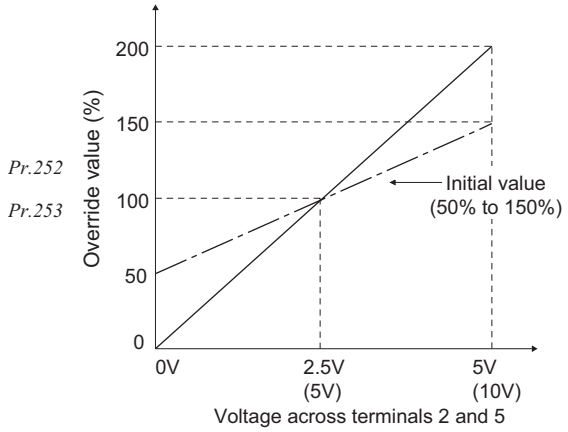

Example)When *Pr. 73* = "5"
The set frequency changes as shown below according to the terminal 1 (main speed) and terminal 2 (auxiliary) inputs.

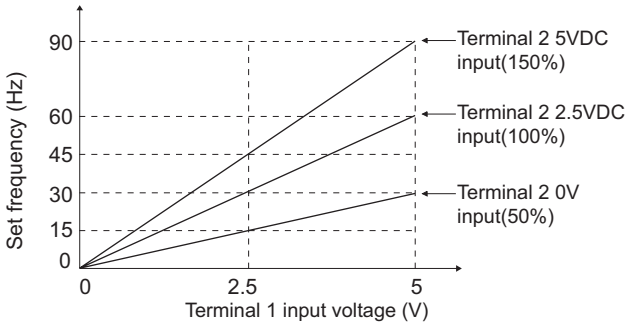

CAUTION

- When the *Pr. 73* setting was changed, check the voltage/current input switch setting. Different setting may cause a fault, failure or malfunction. (*Refer to page 171* for setting.)

REMARKS

- The AU signal must be turned ON to use the terminal 4.
- When inputting compensation to multi-speed operation or remote setting, set "1" (compensation made) to *Pr. 28 Multi-speed input compensation selection*. (Initial value is "0")

♦ Parameters referred to ♦

Pr. 28 Multi-speed input compensation selection ☞ *Refer to page 97*
Pr. 73 Analog input selection ☞ *Refer to page 171*

4.16.3 Response level of analog input and noise elimination (Pr. 74)

The time constant of the primary delay filter relative to external frequency command (analog input (terminal 1, 2, 4) signal) can be set.

Parameter Number	Name	Initial Value	Setting Range	Description
74	**Input filter time constant**	1	0 to 8	Set the primary delay filter time constant for the analog input. A larger setting results in slower response.

The above parameters can be set when *Pr. 160 User group read selection* = "0". *(Refer to page 190)*

- Effective for eliminating noise in the frequency setting circuit.
- Increase the filter time constant if steady operation cannot be performed due to noise. A larger setting results in slower response. (The time constant can be set between approximately 5ms to 1s with the setting of 0 to 8.)

4.16.4 Bias and gain of frequency setting voltage (current) (Pr. 125, Pr. 126, Pr. 241, C2(Pr. 902) to C7(Pr. 905))

You can set the magnitude (slope) of the output frequency as desired in relation to the frequency setting signal (0 to 5V, 0 to 10V or 4 to 20mADC).
Set *Pr. 73* and *Pr. 267* to switch between 0 to 5VDC, 0 to 10VDC and 4 to 20mADC. *(Refer to page 171)*

Parameter Number	Name	Initial Value	Setting Range	Description	
125	**Terminal 2 frequency setting gain frequency**	60Hz	0 to 400Hz	Set the frequency of terminal 2 input gain (maximum).	
126	**Terminal 4 frequency setting gain frequency**	60Hz	0 to 400Hz	Set the frequency of terminal 4 input gain (maximum).	
241 *1, 3	**Analog input display unit switchover**	0	0	Displayed in %	Select the unit of analog input display.
			1	Displayed in V/mA	
C2(902) *1, 2	**Terminal 2 frequency setting bias frequency**	0Hz	0 to 400Hz	Set the frequency on the bias side of terminal 2 input.	
C3(902) *1, 2	**Terminal 2 frequency setting bias**	0%	0 to 300%	Set the converted % of the bias side voltage (current) of terminal 2 input.	
C4(903) *1, 2	**Terminal 2 frequency setting gain**	100%	0 to 300%	Set the converted % of the gain side voltage (current) of terminal 2 input.	
C5(904) *1, 2	**Terminal 4 frequency setting bias frequency**	0Hz	0 to 400Hz	Set the frequency on the bias side of terminal 4 input.	
C6(904) *1, 2	**Terminal 4 frequency setting bias**	20%	0 to 300%	Set the converted % of the bias side current (voltage) of terminal 4 input.	
C7(905) *1, 2	**Terminal 4 frequency setting gain**	100%	0 to 300%	Set the converted % of the gain side current (voltage) of terminal 4 input.	

*1 The parameters can be set when *Pr. 160 User group read selection* = "0". *(Refer to page 190.)*
*2 The parameter number in parentheses is the one for use with the parameter unit (FR-PU04/FR-PU07).
*3 The above parameters allow its setting to be changed during operation in any operation mode even if "0" (initial value) is set in *Pr. 77 Parameter write selection*.

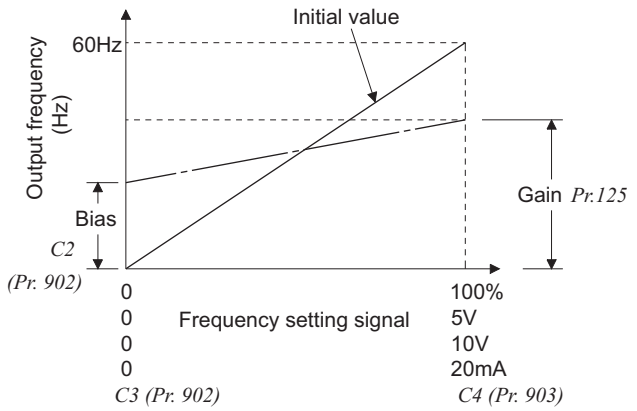

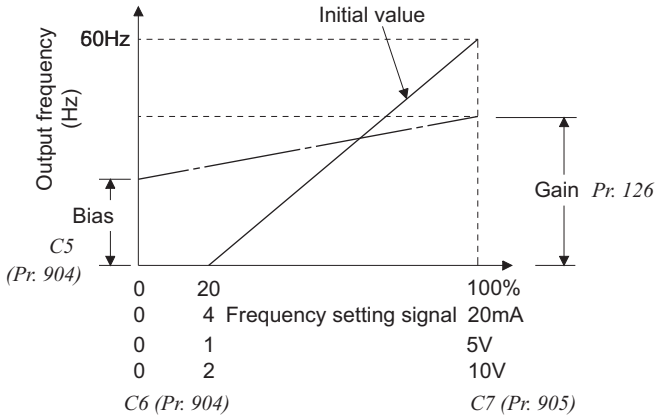

(1) Change the frequency at maximum analog input. *(Pr. 125, Pr. 126)*

- Set a value in *Pr. 125 (Pr. 126)* when changing only the frequency setting (gain) of the maximum analog input power (current). (*C2 (Pr. 902) to C7 (Pr. 905)* setting need not be changed)

(2) Analog input bias/gain calibration (*C2(Pr. 902) to C7(Pr. 905)*,)

- The "bias" and "gain" functions are used to adjust the relationship between the input signal entered from outside the inverter to set the output frequency, e.g. 0 to 5V, 0 to 10V or 0 to 20mADC, and the output frequency.
- Set the bias frequency of the terminal 2 input using *C2 (Pr. 902)*. (initial set to the frequency at 0V)
- Using *Pr. 125*, set the output frequency relative to the frequency command voltage (current) set in *Pr. 73 Analog input selection*.
- Set the bias frequency of the terminal 4 input using *C5 (Pr. 904)*. (initial set to the frequency at 4mA)
- Using *Pr. 126*, set the output frequency relative to 20mA of the frequency command current (0 to 20mA).
- There are three methods to adjust the frequency setting voltage (current) bias/gain.
  - (a) Method to adjust any point by application of voltage (current) to across the terminals 2 and 5 (4 and 5). ☞ *page 179*
  - (b) Method to adjust any point without application of a voltage (current) to across terminals 2 and 5 (4 and 5). ☞ *page 180*
  - (c) Adjusting only the frequency without adjusting the voltage (current). ☞ *page 181*

CAUTION

- When the terminal 2 is calibrated to change the inclination of the set frequency, the setting of the terminal 1 is also changed.
- When a voltage is input to the terminal 1 to make calibration, (terminal 2 (4) analog value + terminal 1 analog value) is the analog calibration value.
- When the voltage/current input specifications were changed using *Pr. 73* and *Pr. 267*, be sure to make calibration.

(3) Analog input display unit changing *(Pr. 241)*

- You can change the analog input display unit (%/V/mA) for analog input bias/gain calibration.
- Depending on the terminal input specification set to *Pr. 73* and *Pr. 267*, the display units of *C3 (Pr. 902), C4 (Pr. 903), C6 (Pr. 904) C7 (Pr. 905)* change as shown below.

Analog Command (terminal 2, 4) (according to *Pr. 73, Pr. 267*)	*Pr. 241* = 0 (initial value)	*Pr. 241* = 1
0 to 5V input	0 to 5V → displayed in 0 to 100%(0.1%).	0 to 100% → displayed in 0 to 5V(0.01V).
0 to 10V input	0 to 10V → displayed in 0 to 100%(0.1%).	0 to 100% → displayed in 0 to 10V(0.01V).
4 to 20mA input	0 to 20mA → displayed in 0 to 100%(0.1%).	0 to 100% → displayed in 0 to 20mA(0.01mA).

REMARKS

- Analog input display is not displayed correctly if voltage is applied to terminal 1 when terminal 1 input specifications (0 to ±5V, 0 to ±10V) and main speed (terminal 2, terminal 4 input) specifications (0 to 5V, 0 to 10V, 0 to 20mA) differ. (For example, 5V (100%) is analog displayed when 0V and 10V are applied to terminal 2 and terminal 1 respectively in the initial status.
- Set "0" (initial value is 0% display) in *Pr. 241* to use.

(4) Frequency setting signal (current) bias/gain adjustment method

(a)Method to adjust any point by application of voltage (current) across the terminals 2 and 5 (4 and 5).

Operation — **Display**

1. Confirm the RUN indication and operation mode indication
   - The inverter should be at a stop.
   - The inverter should be in the PU operation mode.(Using PU/EXT)

2. Press MODE to choose the parameter setting mode.

(The parameter number read previously appears.)

3. Turn ◎ until C. . . appears.

4. Press SET to display C - - -.

(C0 to C7 setting is enabled.)

5. Turn ◎ until C. 4 (C. 7) appears. Set to C4 Terminal 2 frequency setting gain.

Terminal 2 input Terminal 4 input

6. Press SET to display the analog voltage (current) value (%).

Analog voltage (current) value (%) across terminals 2 and 5 (across terminals 4 and 5)

7. Apply a 5V (20mA) voltage (current). (Turn the external potentiometer connected across terminals 2 and 5 (across terminals 4 and 5) to maximum (any position).)

*

*The value is nearly 100 (%) in the maximum position of the potentiometer.

CAUTION

After performing the operation in step 6, do not touch ◎ until completion of calibration.

8. Press SET to set.

* Terminal 2 input Terminal 4 input

Flicker...Parameter setting complete!!
(Adjustment completed)

*The value is nearly 100 (%) in the maximum position of the potentiometer.

- Turn ◎ to read another parameter.
- Press SET to return to the C - - - indication (step 4).
- Press SET twice to show the next parameter (Pr.CL).

REMARKS

- If the frequency meter (indicator) connected to across terminals CA and 5 does not indicate exactly 60Hz, set *calibration parameter C0 CA terminal calibration. (Refer to page 149)*
- If the gain and bias of frequency setting voltage (current) are too close, an error (Er3) may be displayed at setting.

(b) Method to adjust any point without application of a voltage (current) to across terminals 2 and 5 (4 and 5).
(To change from 4V (80%) to 5V (100%))

Operation | **Display**

1. Confirm the RUN indication and operation mode indication
   - The inverter should be at a stop.
   - The inverter should be in the PU operation mode.(Using PU/EXT)

2. Press MODE to choose the parameter setting mode.

(The parameter number read previously appears.)

3. Turn ◎ until C. . . appears.

4. Press SET to display C - - -.

(C0 to C7 setting is enabled.)

5. Turn ◎ until C. 4 (C. 7) appears. Set to C4 Terminal 2 frequency setting gain.

6. Press SET to display the analog voltage (current) value (%).

Analog voltage (current) value (%) across terminals 2 and 5 (across terminals 4 and 5)

7. Turn ◎ to set the gain voltage (%).
   "0V (0mA) equals to 0%, 5V (10V, 20mA) to 100%"

   Remarks
   The current setting at the instant of turning ◎ is displayed.

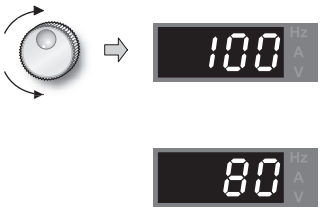

The gain frequency is reached when the analog voltage (current) value across terminals 2 and 5 (across terminals 4 and 5) is 100%.

8. Press SET to set.

Flicker...Parameter setting complete!!
(Adjustment completed)

- Turn ◎ to read another parameter.
- Press SET to return to the C - - - indication (step 4).
- Press SET twice to show the next parameter (Pr.CL).

REMARKS

By pressing ◎ after step 6, you can confirm the current frequency setting bias/gain setting.
It cannot be confirmed after execution of step 7.

(c) Method to adjust only the frequency without adjustment of a gain voltage (current).
(When changing the gain frequency from 60Hz to 50Hz)

Operation

1. Turn until P. 125 (*Pr. 125*) or P. 126 (*Pr. 126*) appears.
2. Press SET to show the present set value. (Rated motor frequency (initial value))
3. Turn to change the set value to " 50.00 ". (50.00Hz)
4. Press SET to set.
5. Mode/monitor check
   Press MODE twice to choose the monitor/frequency monitor.
6. Apply a voltage across the drive unit terminals 2 and 5 (across 4 and 5) and turn ON the start command (STF, STR). Operation starts at 50Hz.

Display

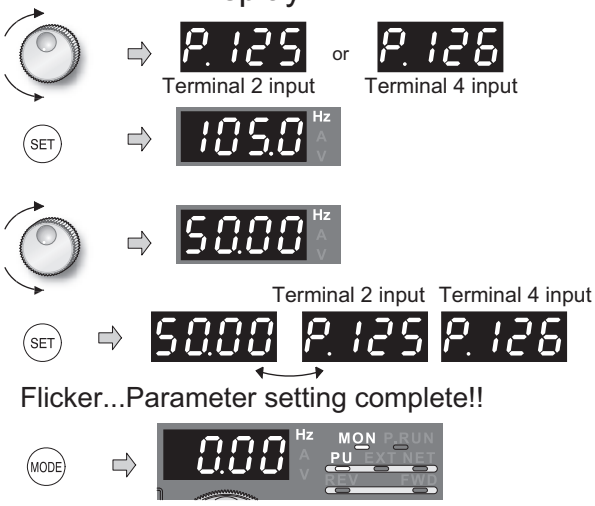

REMARKS

- Changing *C4 (Pr. 903)* or *C7 (Pr. 905)* (gain adjustment) value will not change the *Pr. 20* value. The input of terminal 1 (frequency setting auxiliary input) is added to the speed setting signal.
- For the operating procedure using the parameter unit (FR-PU04/FR-PU07), refer to the FR-PU04/FR-PU07 instruction manual.
- When setting the value to 120Hz or more, it is necessary to set *Pr. 18 High speed maximum frequency* to 120Hz or more. *(Refer to page 87)*
- Make the bias frequency setting using *calibration parameter C2 (Pr. 902) or C5 (Pr. 904). (Refer to page 178)*

⚠ CAUTION

⚠ Be cautious when setting any value other than "0" as the bias frequency at 0V (0mA). Even if a speed command is not given, merely turning ON the start signal will start the motor at the preset frequency.

♦ Parameters referred to ♦

Pr. 20 Acceleration/deceleration reference frequency ☞ *Refer to page 101*
Pr. 73 Analog input selection, Pr. 267 Terminal 4 input selection ☞ *Refer to page 171*
Pr. 79 Operation mode selection ☞ *Refer to page 195*

4.16.5 4mA input check of current input (Pr. 573, Pr. 777, Pr. 778)

When inputting 4 to 20mA current to terminal 2 or terminal 4, decrease in analog current input is detected to enable continuous operation even if input has decreased.

Parameter Number	Name	Initial Value	Setting Range	Description
573	4mA input check selection	9999	1	When the current input drops to or below 2mA, the LF signal is output and inverter continues operation at the frequency (average value) just before current reaches 2mA.
			2	When the analog input current drops to or below 2mA, the fault (E.LCI) is output and the inverter output is shutoff.
			3	When the analog input current drops to or below 2mA, the alarm signal (LF) is output, and the fault (E.LCI) is output after deceleration to a stop. When the current rises to or above 3mA during the deceleration, the motor accelerates again to the set point and resumes normal operation.
			4	When the analog input current drops to or below 2mA, the alarm signal (LF) is output and the inverter continues operation at the *Pr. 777* setting.
			9999	4mA input is not checked.
777 Ver.UP	4mA input fault operation frequency	9999	0 to 400Hz	Set the frequency to continue the operation when the analog input current drops to or below 2mA while *Pr. 573* ="4."
			9999	4mA input is not checked while *Pr. 573* = "4."
778 Ver.UP	Current input check filter	0	0 to 10s	Detection for an analog input current drop is performed for the time period of *Pr. 778* while the analog input current ≤ 2mA. Detection for an analog input current drop is cancelled for the time period of *Pr. 778* while the analog input current > 3mA. *Pr. 778* =0: Immediately detected or the detection is cancelled.

The above parameters can be set when *Pr. 160 User group read selection* = "0". *(Refer to page 190.)*

Ver.UP ....Specifications differ according to the date assembled. *Refer to page 400* to check the SERIAL number.

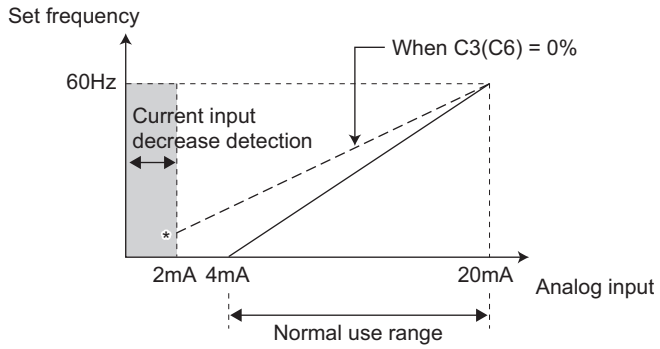

* When *Pr.573* = "1", input decrease is detected (LF signal output) even if the analog input value to bias frequency of terminal 2 or terminal 4 is set to 2mA or less using *C2 (Pr. 902)* or *C5 (Pr. 904)* and the value is not as bias frequency settings.

(1) Operation continuation (*Pr. 573* = "1")

- When the input current of terminal 4 (terminal 2) falls 2mA or below, output alarm output signal (LF) is output.
- When the current falls below 2mA, the output frequency (average value) before detection is retained and operation at the retained frequency continues.
- When the current input increases above 3mA, the LF signal output is turned OFF and the inverter operates according to the current input.
- For the LF signal, set "98 (positive logic) or 198 (negative logic)" in *Pr. 190 to Pr. 196 (output terminal function selection)* and assign functions to the output terminal.
- Since turning OFF the start command clears the retained frequency, the inverter does not operate at the retained frequency even if restarted.

During external operation (*Pr. 573* = 1)

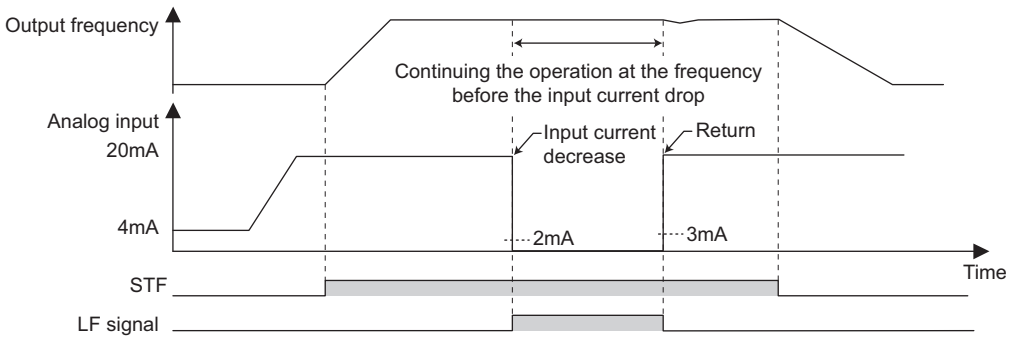

During PID control (reverse action) (*Pr. 573* = 1)

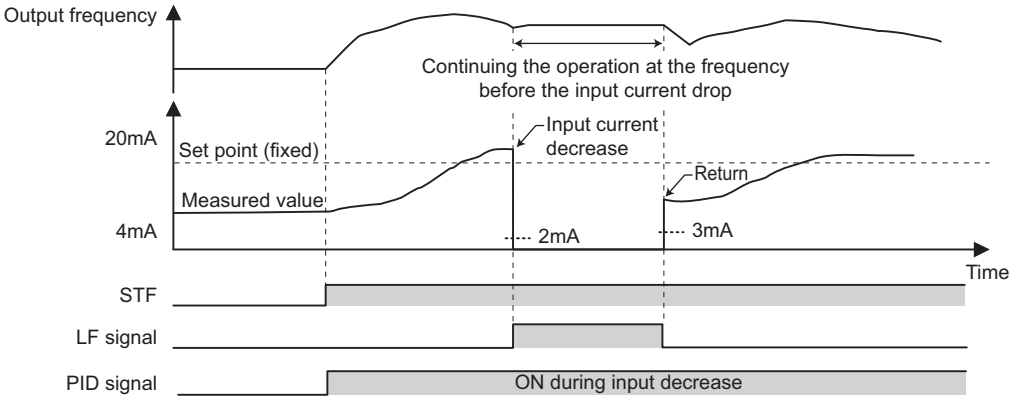

CAUTION

- Changing the terminal assignment using *Pr. 190 to Pr. 196 (output terminal function selection)* may affect the other functions. Set parameters after confirming the function of each terminal.

(2) Fault output (*Pr. 573* = "2")

When the analog input current drops to or below 2mA, the fault (E.LCI) is output and the inverter output is shutoff.

(3) Fault output after deceleration to stop (*Pr. 573* = "3")

When the analog input current drops to or below 2mA, the alarm (LF) is output and the motor decelerates to stop. After it is stopped, the fault (E.LCI) is output.
When the input current rises again during the deceleration (including the cases when the 4mA current input is invalid or no check is performed for the input current), the motor accelerates again to the set point and performs normal operation.

During PID control (reverse action) (*Pr. 573* = 3)

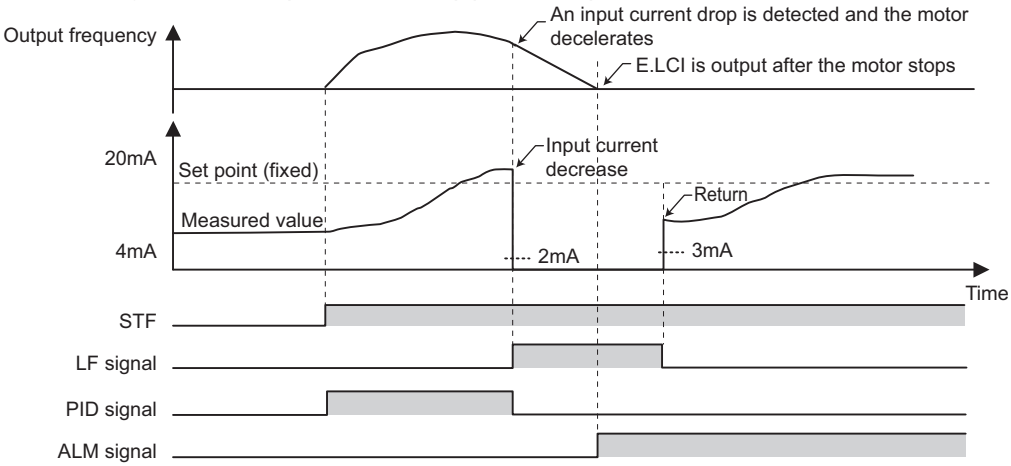

During PID control (reverse action) (Analog input current is restored during deceleration while *Pr.573* =3)

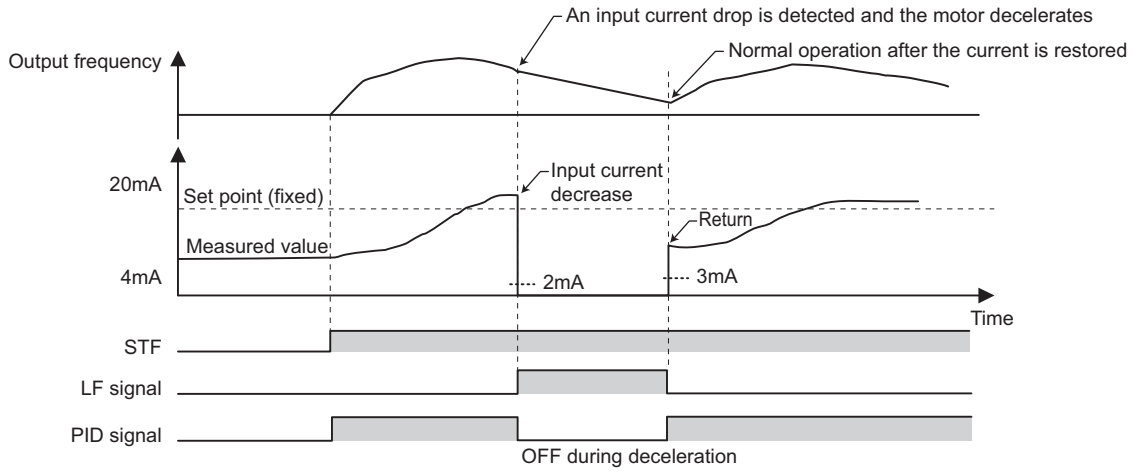

(4) Continuing the operation at *Pr. 777* setting (*Pr. 573* = "4")

When the analog input current drops to or below 2mA, the alarm (LF) is output and the inverter continues operation at the set frequency of *Pr. 777*. When the analog input current is restored to or above 3mA, the alarm (LF) is cancelled.

During external operation (*Pr. 573* = 4)

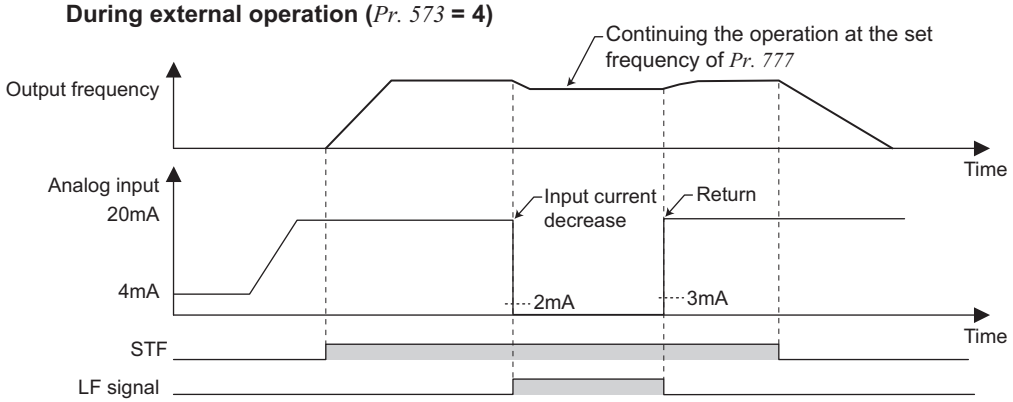

During PID control (reverse action) (*Pr. 573* = 4)

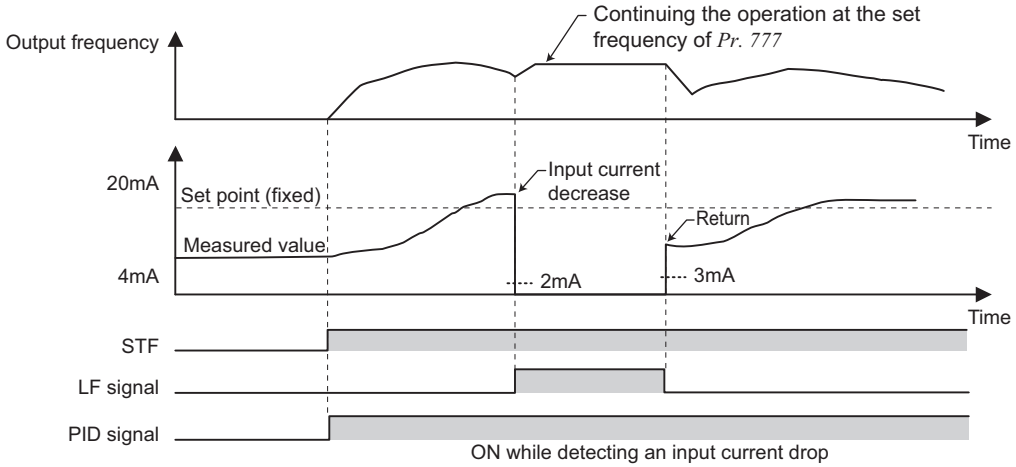

REMARKS

- When the *Pr. 573* and *Pr. 777* settings are changed after the detection for an input current drop, the inverter operates with the changed settings. However, the inverter operates with previous settings while in stop or in alarm.

(5) Function related to 4mA input check

Function	Operation	Refer to page
Minimum frequency	Even if the input current decreases, minimum frequency setting clamp is valid.	87
Multi-speed operation	Operation by multiple speed signal has precedence even if input current decreases. (Frequency is not retained when the input current decreases.) Operation stops when a multi-speed signal turns OFF.	93
Jog operation	The JOG signal has precedence even during decrease in input current. (Frequency is not retained when the input current decreases.) Operation stops when the JOG signal is turned OFF during decrease in input current. PU/jog operation is enabled during PID control. At this time, PU/jog operation has precedence during decrease in input current.	95
MRS	Output is shut off by the MRS signal even if input current decreases. (The inverter stops when the MRS signal is turned OFF.)	124
Remote setting	The retained frequency will not change even if remote acceleration/deceleration and clear are performed during decrease in input current. Reflected at restoration. Remote setting is invalid under PID control.	98
Retry	When retry was successful at error occurrence during decrease in input current, retained frequency was not cleared and operation continues.	159
Added compensation, override function	Operation of added compensation (terminal 1) and override compensation (terminal 2) are invalid during decrease in input current.	175
Input filter time constant	The value before filtering is detected. When input current decreases, frequency after filtering (average value) is retained.	176
Forward/reverse rotation prevention	Motor rotation direction can be restricted independently of 4mA input check setting.	190
PID control	Although PID operation is stopped when input current decreases, the X14 signal remains ON. (PID operation is valid.) During the pre-charge operation, the pre-charge ending level and the pre-charge limit are not applied. The SLEEP function overrides the operation continuation selection (*Pr.573* ≠ "2 or 3"). Even if the 4mA input is lost, the SLEEP function activates. PID operation restarts at the specified frequency when the cancellation conditions for the SLEEP function are satisfied.	261
Power failure stop	Even if input current decreases when undervoltage or power failure occurs, the motor stops according to the setting of power-failure deceleration stop function. E.LCI occurs if a fault occurs from a stop.	156
Pump function	If auxiliary motor switchover conditions of pump function is satisfied even when input current decreases, motor connection/release operation is performed.	283
Switch-over	When the switchover function is operated, frequency is the same as that of the retained frequency. Note that if 4mA input is invalid once in switchover mode, the frequency is not retained next time.	195

♦ Parameters referred to ♦

Pr. 73 Analog input selection ☞ *Refer to page 175*
Pr. 267 Terminal 4 input selection ☞ *Refer to page 171*

4.17 Misoperation prevention and parameter setting restriction

Purpose	Parameter that must be Set		Refer to Page
Limit reset function Trips stop when PU is disconnected Stop from PU	**Reset selection/disconnected PU detection/PU stop selection**	**Pr. 75**	186
Prevention of parameter rewrite	**Parameter write selection**	**Pr. 77**	189
Prevention of reverse rotation of the motor	**Reverse rotation prevention selection**	**Pr. 78**	190
Display necessary parameters	**Display of applied parameters and user group function**	**Pr. 160, Pr. 172 to Pr. 174**	190
Parameter restriction with using password	**Password function**	**Pr. 296, Pr. 297**	192
Control of parameter write by communication	**EEPROM write selection**	**Pr. 342**	216

4.17.1 Reset selection/disconnected PU detection/PU stop selection (Pr. 75)

You can select the reset input acceptance, disconnected PU (FR-DU07/FR-PU04/FR-PU07) connector detection function and PU stop function.

Parameter Number	Name	Initial Value	Setting Range 200V class (400V class)		Description
75 *	**Reset selection/disconnected PU detection/PU stop selection**	14	02330 (01160) or less	0 to 3, 14 to 17	For the initial value, reset always enabled, without disconnected PU detection, and with PU stop function are set.
			03160 (01800) or more	0 to 3, 14 to 17, 100 to 103, 114 to117	

·The above parameter can be set when *Pr. 160 User group read selection* = "0". *(Refer to page 190)*
·The *Pr. 75* value can be set any time. Also, if parameter (all) clear is executed, this setting will not return to the initial value.
* The above parameter allows its setting to be changed during operation in any operation mode even if "0" (initial value) is set in *Pr. 77 Parameter write selection*.

Pr. 75 Setting	Reset Selection	Disconnected PU Detection	PU Stop Selection	Reset Limit (FR-F720-03160 (FR-F740-01800) or more)
0	Reset input always enabled	If the PU is disconnected, operation will be continued.	Pressing STOP RESET decelerates the motor to a stop only in the PU operation mode.	Not function
1	Reset input enabled only when the inverter trips			
2	Reset input always enabled	When the PU is disconnected, the inverter trips.		
3	Reset input enabled only when the inverter trips			
14 (initial value)	Reset input always enabled	If the PU is disconnected, operation will be continued.	Pressing STOP RESET decelerates the motor to a stop in any of the PU, External and Network operation modes.	
15	Reset input enabled only when the inverter trips			
16	Reset input always enabled	When the PU is disconnected, the inverter trips.		
17	Reset input enabled only when the inverter trips			
100	Reset input always enabled	If the PU is disconnected, operation will be continued.	Pressing STOP RESET decelerates the motor to a stop only in the PU operation mode.	Function
101	Reset input enabled only when the inverter trips			
102	Reset input always enabled	When the PU is disconnected, the inverter trips.		
103	Reset input enabled only when the inverter trips			
114	Reset input always enabled	If the PU is disconnected, operation will be continued.	Pressing STOP RESET decelerates the motor to a stop in any of the PU, External and Network operation modes.	
115	Reset input enabled only when the inverter trips			
116	Reset input always enabled	When the PU is disconnected, the inverter trips.		
117	Reset input enabled only when the inverter trips			

(1) Reset selection

- You can select the enable condition of reset function (RES signal, reset command through communication) input.
- When *Pr. 75* is set to any of "1, 3, 15, 17, 101, 103, 115, 117", a reset can be input only when a fault occurs.

CAUTION

- When the reset signal (RES) is input during operation, the motor coasts since the inverter being reset shuts off the output. Also, the cumulative value of the electronic thermal relay function is cleared.
- The reset key of the PU is valid only when a fault occurs, independently of the *Pr. 75* setting.

(2) Disconnected PU detection

- This function detects that the PU (FR-DU07/FR-PU04/FR-PU07) has been disconnected from the inverter for longer than 1s and causes the inverter to provide a fault output (E.PUE) and come to trip.
- When *Pr. 75* is set to any of "0, 1, 14, 15, 100, 101, 114, 115", operation is continued if the PU is disconnected.

CAUTION

- When the PU has been disconnected since before power-ON, it is not judged as a fault.
- To make a restart, confirm that the PU is connected and then reset the inverter.
- The motor decelerates to a stop when the PU is disconnected during PU Jog operation with *Pr. 75* set to any of "0, 1, 14, 15" (which selects operation is continued if the PU is disconnected).
- When RS-485 communication operation is performed through the PU connector, the reset selection/PU stop selection function is valid but the disconnected PU detection function is invalid.

(3) PU stop selection

- In any of the PU operation, External operation and Network operation modes, the motor can be stopped by pressing STOP RESET of the PU.
- When the inverter is stopped by the PU stop function, "PS" is displayed. A fault signal is not provided.
- When *Pr. 75* is set to any of "0 to 3, 100 to 103", deceleration to a stop by STOP RESET is valid only in the PU operation mode.

REMARKS

The motor will also decelerate to a stop (PU stop) when STOP RESET is input during operation in the PU mode through RS-485 communication with *Pr. 551 PU mode operation command source selection* set to "1" (PU mode RS-485 terminals).

(4) How to restart the motor stopped by STOP/RESET input from the PU in External operation mode (PU stop (PS) reset method)

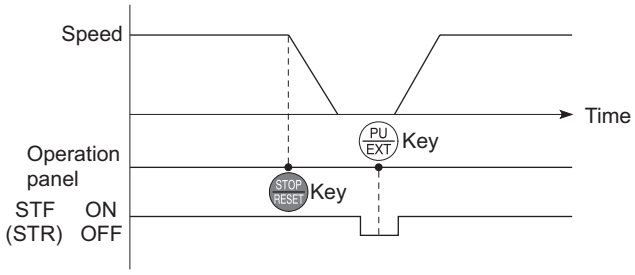

Stop/restart example for external operation

(a) When operation panel (FR- DU07) is used

1)After the motor has decelerated to a stop, turn OFF the STF or STR signal.

2)Push "PU/EXT" three times.

(When *Pr. 79 Operation mode selection* = "0 (initial value) or 6") ...(PS release)

(When *Pr. 79 Operation mode selection* = "2, 3, or 7"), pushing "PU/EXT" once will release PS .

3)Turn ON the STF or STR signal.

(b) Connection of the parameter unit (FR-PU04/FR-PU07)

1)After the motor has decelerated to a stop, turn OFF the STF or STR signal.

2)Press EXT.••••••(PS canceled)

3)Turn ON the STF or STR signal.

- The motor can be restarted by making a reset using a power supply reset or RES signal.

CAUTION

· Even if *Pr. 250 Stop selection* is set to other than "9999" to select coasting to a stop, the motor will not coast to a stop but decelerate to a stop by the PU stop function during external operation.
To restart after the inverter is stopped by PU with PLC function, reset using a power supply rest or RES signal. (sending stop signal from GX Developer, can also perform the reset.)

⚠ CAUTION

⚠ Do not reset the inverter with the start signal ON. Doing so will cause the inverter to start immediately after a reset, leading to hazardous conditions.

(5) Reset limit

- Setting can be made for the FR-F720-03160 (FR-F740-01800) or more.
- You can set *Pr. 75* to disable reset operation until the thermal cumulative amount reaches 0 when a thermal trip (THM, THT) or an overcurrent trip (OC1 to OC3) occurs consecutively twice.
- When *Pr. 75* = "100 to 103, 114 to 117", reset limit is valid.

REMARKS

When the power-ON reset (no control power is supplied) is made, the thermal cumulative amount is cleared.

♦ Parameters referred to ♦

Pr. 250 Stop selection ☞ *Refer to page 119*

4.17.2 Parameter write selection (Pr. 77)

You can select whether write to various parameters can be performed or not. Use this function to prevent parameter values from being rewritten by misoperation.

Parameter Number	Name	Initial Value	Setting Range	Description
77	Parameter write selection	0	0	Write is enabled only during a stop.
			1	Parameter write is not enabled.
			2	Parameter write is enabled in any operation mode regardless of operating status.

The above parameters can be set when *Pr. 160 User group read selection* = "0". *(Refer to page 190.)*
Pr. 77 can be always set independently of the operation mode and operating status.

(1) Write parameters only at a stop (setting "0", initial value)

- Parameters can be written only during a stop in the PU operation mode.
- The parameters marked in the parameter list *(page 62)* ▭ can always be written, regardless of the operation mode and operating status. However, *Pr. 72 PWM frequency selection* and *Pr. 240 Soft-PWM operation selection* can be written during operation in the PU operation mode, but cannot be written in External operation mode.

(2) Disable parameter write (setting "1")

- Parameter write is not enabled. (Reading is enabled.)
- Parameter clear and all parameter clear cannot be performed, either.
- The parameters given on the right can be written if *Pr. 77* = "1".

Parameter Number	Name
22	Stall prevention operation level
75	Reset selection/disconnected PU detection/PU stop selection
77	Parameter write selection
79	Operation mode selection
160	User group read selection
296	Password lock level
297	Password lock/unlock

(3) Write parameters during operation (setting "2")

- Parameters can always be written.
- The following parameters cannot be written during operation if *Pr. 77* = "2". Stop operation when changing their parameter settings.

Parameter Number	Name
23	Stall prevention operation level compensation factor at double speed
48	Second stall prevention operation current
49	Second stall prevention operation frequency
60	Energy saving control selection
66	Stall prevention operation reduction starting frequency
71	Applied motor
79	Operation mode selection
80	Motor capacity
90	Motor constant (R1)
100 to 109	(Adjustable 5 points V/F parameter)
135	Electronic bypass sequence selection
136	MC switchover interlock time
137	Start waiting time
138	Bypass selection at a fault
139	Automatic switchover frequency from inverter to bypass operation
178 to 196	(I/O terminal function selection)
329	Digital input unit selection (Parameter for the plug-in option FR-A7AX)
414	PLC function operation selection
415	Inverter operation lock mode setting
570	Multiple rating setting

♦ Parameters referred to ♦

Pr. 79 Operation mode selection ☞ *Refer to page 195*

4.17.3 Reverse rotation prevention selection (Pr. 78)

This function can prevent reverse rotation fault resulting from the incorrect input of the start signal.

Parameter Number	Name	Initial Value	Setting Range	Description
78	Reverse rotation prevention selection	0	0	Both forward and reverse rotations allowed
			1	Reverse rotation disabled
			2	Forward rotation disallowed

The above parameters can be set when *Pr. 160 User group read selection* = "0". *(Refer to page 190.)*

- Set this parameter when you want to limit the motor rotation to only one direction.
- This parameter is valid for all of the reverse rotation and forward rotation keys of the operation panel (FR-DU07), parameter unit (FR-PU04/FR-PU07), signals (STF, STR signals) via external terminals, and the forward and reverse rotation commands through communication.

4.17.4 Display of applied parameters and user group function (Pr. 160, Pr. 172 to Pr. 174)

Parameter which can be read from the operation panel and parameter unit can be restricted.
In the initial setting, only the simple mode parameters are displayed.

Parameter Number	Name	Initial Value	Setting Range	Description
160 *1, 3	User group read selection	0	9999	Only the simple mode parameters can be displayed.
			0	The simple mode and extended parameters can be displayed
			1	Only parameters registered in the user group can be displayed.
172 *1	User group registered display/ batch clear	0	(0 to 16)	Displays the number of cases registered as a user group (Read only)
			9999	Batch clear the user group registration
173 *1, 2	User group registration	9999	0 to 999, 9999	Set the parameter numbers to be registered to the user group.
174 *1, 2	User group clear	9999	0 to 999, 9999	Set the parameter numbers to be cleared from the user group.

*1 They can be set when *Pr. 160 User group read selection* = "0".
*2 The values read from *Pr. 173* and *Pr. 174* are always "9999".
*3 The above parameter allows its setting to be changed during operation in any operation mode even if "0" (initial value) is set in *Pr. 77 Parameter write selection*.

(1) Display of simple mode parameters and extended parameters (*Pr. 160*)

- When *Pr. 160* = "9999", only the simple mode parameters can be displayed on the operation panel (FR-DU07) and parameter unit (FR-PU04/FR-PU07). (Refer to the parameter list, *pages 62 to 74*, for the simple mode parameters.)
- Set "0" in *Pr. 160* to display of the simple mode parameters and extended parameters. In the initial setting (*Pr. 160* = "0") status, simple mode parameters and extended parameters can be displayed.

REMARKS

- When a plug-in option is fitted to the inverter, the option parameters can also be read.
- When reading the parameters using the communication option, all parameters can be read regardless of the *Pr. 160* setting.
- When reading the parameters using the RS-485 terminals, all parameters can be read regardless of the *Pr. 160* setting by setting *Pr.550 NET mode operation command source selection* and *Pr. 551 PU mode operation command source selection*.

Pr.551	Pr.550	Pr.160 Valid/Invalid
1 (RS-485)	—	Valid
2 (PU) (initial value)	0(OP)	Valid
	1(RS-485)	Invalid (all readable)
	9999 (auto-detect) (initial value)	With OP: valid
		Without OP: invalid (all readable)

* OP indicates a communication option

- *Pr. 15 Jog frequency*, *Pr. 16 Jog acceleration/deceleration time*, *Pr. 991 PU contrast adjustment* are displayed as simple mode parameters when the parameter unit (FR-PU04/FR-PU07) is mounted.

(2) User group function (*Pr. 160, Pr. 172 to Pr. 174*)

- The user group function is designed to display only the parameters necessary for setting.
- From among all parameters, a maximum of 16 parameters can be registered to a user group. When *Pr. 160* is set to "1", only the parameters registered to the user group can be accessed. (Reading of parameters other than the user group registration is disabled.)
- To register a parameter to the user group, set its parameter number to *Pr. 173*.
- To delete a parameter from the user group, set its parameter number to *Pr. 174*. To batch-delete the registered parameters, set *Pr. 172* to "9999".

(3) Registration of parameter to user group (*Pr. 173*)

When registering *Pr. 3* to user group

Operation

1. Confirm the operation display and operation mode display.
   - The inverter must be at a stop.
   - The inverter must be in the PU operation mode. (Press PU/EXT in the External operation mode.)
2. Press MODE to choose the parameter setting mode.
3. Turn ◎ until P.173 appears.
4. Press SET to display. "9999"
5. Turn ◎ until *Pr. 3* appears.
6. Press SET to set. "P.173" and "3" are displayed alternately.

   To continue parameter registration, repeat steps 3 to 6.

Indication

MODE	P. 0	Parameter setting mode
◎	P.173	*Pr. 173* User group registration is displayed.
SET	9999	When *Pr. 173* is read, "9999" is displayed.
◎	3	Select the parameter number to be registered.
SET	3 ↔ P.173	

Flicker ··· Registration of *Pr. 3* to user group completed!!

(4) Deletion of parameter from user group (*Pr. 174*)

When deleting *Pr. 3* from user group

Operation

1. Confirm the operation display and operation mode display.
   - The inverter must be at a stop.
   - The inverter must be in the PU operation mode. (Press PU/EXT in the External operation mode.)
2. Press MODE to choose the parameter setting mode.
3. Turn ◎ until P.174 appears.
4. Press SET to display. "9999"
5. Turn ◎ until *Pr. 3* appears.
6. Press SET to clear. "P.174" and "3" are displayed alternately.

   To continue parameter registration, repeat steps 3 to 6.

Indication

MODE	P. 0	Parameter setting mode
◎	P.174	*Pr. 174* User group clear is displayed.
SET	9999	When *Pr. 174* is read, "9999" is displayed.
◎	3	Select the parameter number to be deleted.
SET	3 ↔ P.174	

Flicker ··· Deletion of *Pr. 3* from user group completed!!

REMARKS

- *Pr. 77, Pr. 160* and *Pr. 991* can always be read, independently of the user group setting.
- *Pr. 77, Pr. 160* and *Pr. 172 to Pr. 174* cannot be registered to the user group.
- When *Pr. 174* is read, "9999" is always displayed. Although "9999" can be written, no function is available.
- When any value other than "9999" is set to *Pr. 172*, no function is available.

♦ Parameters referred to ♦

Pr. 550 NET mode operation command source selection ☞ *Refer to page 204*
Pr. 551 PU mode operation command source selection ☞ *Refer to page 204*

4.17.5 Password function (Pr. 296, Pr. 297)

Registering 4-digit password can restrict parameter reading/writing.

Parameter Number	Name	Initial Value	Setting Range	Description
296 Ver.UP	Password lock level	9999	0 to 6, 99, 100 to 106, 199	Select restriction level of parameter reading/ writing when a password is registered.
			9999	No password lock
297 Ver.UP	Password lock/unlock	9999	1000 to 9998	Register a 4-digit password
			(0 to 5) *	Displays password unlock error count. (Reading only) (Valid when *Pr. 296* = "100" to "106")
			9999 *	No password lock

The above parameters can be set when *Pr. 160 User group read selection* = "0".

When *Pr. 296* ≠ "9999" (with password lock), note that *Pr. 297* is always available for setting regardless of *Pr. 160* setting.

* "0 or 9999" can be set to *Pr. 297* at any time although the setting is invalid (the displayed value does not change).

Ver.UP .... Specifications differ according to the date assembled. *Refer to page 400* to check the SERIAL number.

(1) Parameter reading/writing restriction level (*Pr. 296*)

•Level of reading/writing restriction by PU/NET mode operation command can be selected by *Pr. 296*.

Pr. 296 Setting	PU Mode Operation Command *3		NET Mode Operation Command *4			
			RS-485 Terminal		Communication Option	
	Read *1	Write *2	Read	Write *2	Read	Write *2
9999	○	○	○	○	○	○
0, 100 *6	×	×	×	×	×	×
1, 101	○	×	○	×	○	×
2, 102	○	×	○	○	○	○
3, 103	○	○	○	×	○	×
4, 104	×	×	×	×	○	×
5, 105	×	×	○	○	○	○
6, 106	○	○	×	×	○	×
99, 199	Only parameters registered in the user group can be read/written. *5 (For the parameters not registered in the user group, same restriction level as "4, 104" applies.)					

○: enabled, ×: restricted

*1 If the parameter reading is restricted by the *Pr. 160* setting, those parameters are unavailable for reading even when "○" is indicated.

*2 If the parameter writing is restricted by the *Pr. 77* setting, those parameters are unavailable for writing even when "○" is indicated.

*3 Parameter access from unit where parameter is written in PU operation mode (initially set to operation panel (FR-DU07), parameter unit) is restricted. (*Refer to page 204* for PU mode operation command source selection)

*4 This restricts parameter access from the command source that can write a parameter under Network operation mode (initially RS-485 terminal or a communication option). (*Refer to page 204* for NET mode command source.)

*5 Read/write is enabled only in the simple mode parameters registered in the user group when *Pr.160 User group read selection* = "9999". *Pr.296* and *Pr.297* are always read/write enabled whether registered to a user group or not.

*6 If a communication option is installed, option fault (E.OPT) occurs, and inverter trips. (*Refer to page 342*.)

(2) Password lock/unlock (*Pr.296, Pr.297*)

<Lock>

1) Set parameter reading/writing restriction level.(*Pr. 296* ≠ 9999)

Pr.296 Setting Value	Restriction of Password Unlock Error	*Pr.297* Display
0 to 6, 99	No restriction	Always 0
100 to 106, 199	Restricted at fifth error	Displays error count (0 to 5)

* During [*Pr. 296* = any of "100 to 106, 199"], if password unlock error has occurred 5 times, correct password will not unlock the restriction. All parameter clear can unlock the restriction.
(In this case, parameter settings are cleared.)

2) Write a four-digit number (1000 to 9998) in *Pr. 297* as a password.
(When *Pr. 296* = "9999", *Pr. 297* cannot be written.)
When password is registered, parameter reading/writing is restricted with the restriction level set in *Pr. 296* until unlocking.

REMARKS

- After registering a password, a read value of *Pr. 297* is always one of "0" to "5".
- When a password restricted parameter is read/written, LOCd is displayed.
- Even if a password is registered, parameters which the inverter itself writes, such as inverter parts life, are overwritten as needed.
- Even if a password is registered, *Pr. 991 PU contrast adjustment* can be read/written when a parameter unit (FR-PU04/FR-PU07) is connected.

<Unlock>

There are two ways of unlocking the password.

- Enter a password in *Pr. 297*.
  Unlocked when a password is correct. If a password is incorrect, an error occurs and not unlocked.
  During [*Pr. 296* = any of "100 to 106, 199"], if password unlock error has occurred 5 times, correct password will not unlock the restriction. (During password lock)
- Perform all parameter clear.

CAUTION

- If the password has been forgotten, perform all parameter clear to unlock the parameter restriction. In that case, other parameters are also cleared.
- Parameter all clear can not be performed during the operation.
- Do not use the FR Configurator when parameter read is restricted (*Pr. 296* = any of "0, 4, 5, 99, 100, 104, 105, 199").
  FR Configurator may not function properly.

REMARKS

- The password unlock method is different for operation panel/FR-PU07, RS-485 communication, and communication option.

	Operation panel/ FR-PU07	RS-485 communication	Communication option
All parameter clear (data format H9966, H55AA)	○	○	○
Parameter clear (data format H9696, H5A5A)	×	×	○

○:Password can be unlocked. ×:Password cannot be unlocked.

(3) Parameter operation during password lock/unlock

Parameter operation		Unlocked		Password registered	Locked
		Pr. 296 = 9999 *Pr. 297* = 9999	*Pr. 296* ≠ 9999 *Pr. 297* = 9999	*Pr. 296* ≠ 9999 *Pr. 297* = 0 to 4 (Read value)	*Pr. 296* = 100 to 106, 199 *Pr. 297* = 5 (Read value)
Pr. 296	Read	○ *1	○	○	○
	Write	○ *1	○ *1	×	×
Pr. 297	Read	○ *1	○	○	○
	Write	×	○	○	○ *3
Performing parameter clear		○	○	× *4	× *4
Performing parameter all clear		○	○	○ *2	○ *2
Performing parameter copy		○	○	×	×

○: enabled, ×: restricted

*1 Reading/writing is unavailable when there is restriction to reading by the *Pr. 160* setting. (Reading is available in NET mode regardless of *Pr. 160* setting.)
*2 Unavailable during the operation.
*3 Correct password will not unlock the restriction.
*4 Parameter clear is available only from the communication option.

REMARKS

- When *Pr. 296* = any of "4, 5, 104, 105" (password lock), the setting screen for PU JOG frequency is not displayed in the parameter unit (FR-PU04/FR-PU07).
- During password lock, parameter copy of the operation panel (FR-DU07)/the parameter unit (FR-PU07) cannot be performed.
- Parameter settings in the inverter can be read/written using GX Developer even when the password function *(Pr.296, Pr.297)* is valid. To use the password function and the PLC function at the same time, apply a lock to reading/writing of the ladder program by registering a keyword.

♦ Parameters referred to ♦

Pr. 77 Parameter write selection ☞ *Refer to page 189*
Pr. 160 Extended function display selection ☞ *Refer to page 190*
Pr. 550 NET mode operation command source selection ☞ *Refer to page 204*
Pr. 551 PU mode operation command source selection ☞ *Refer to page 204*

4.18 Selection of operation mode and operation location

Purpose	Parameter that must be set		Refer to page
Operation mode selection	**Operation mode selection**	**Pr. 79**	195
Started in network operation mode	**Operation mode at power ON**	**Pr. 79, Pr. 340**	203
Selection of operation location	**Selection of start command source, speed command source and operation location during communication operation**	**Pr. 338, Pr. 339, Pr. 550, Pr. 551**	204

4.18.1 Operation mode selection (Pr. 79)

Used to select the operation mode of the inverter.
Mode can be changed as desired between operation using external command signals (external operation), operation from the PU (FR-DU07/FR-PU04/FR-PU07), combined operation of PU operation and external operation (external/PU combined operation, and network operation (when RS-485 terminals or a communication option is used).

Parameter Number	Name	Initial Value	Setting Range
79	Operation mode selection	0	0 to 4, 6, 7

The above parameters can be changed during a stop in any operation mode.

POINT

• Use the simple setting mode to set *Pr. 79* in simple steps. *(Refer to page 60)*

Pr.79 Setting	Description			LED Indication ▭: OFF ▭: ON	Refer to
0	Use external/PU switchover mode (press PU/EXT to switch between the PU and External operation mode. At power ON, the inverter is in the External operation mode.			PU operation mode PU EXT NET External operation mode PU EXT NET NET operation mode PU EXT NET	198
1	**Operation mode**	**Frequency command**	**Start command**	PU operation mode PU EXT NET	198
	PU operation mode (fixed)	Setting by the operation panel (FR-DU07) and PU (FR-PU04/FR-PU07)	Input by FWD and REV on PU (FR-DU07/FR-PU04/FR-PU07)		
2	External operation mode (fixed) The operation can be performed by switching between the External and NET operation modes.	External signal input (from terminal 2, 4, and 1, JOG, multi-speed selection, etc.)	External signal input (from terminal STF and STR)	External operation mode PU EXT NET NET operation mode PU EXT NET	198
3	External/PU combined operation mode 1	PU (FR-DU07/FR-PU04/FR-PU07) setting or external signal input (multi-speed setting, across terminals 4 and 5 (valid when AU signal turns ON)). *	External signal input (terminal STF, STR)	PU EXT NET	199
4	External/PU combined operation mode 2	External signal input (Terminal 2, 4, 1, JOG, multi-speed selection, etc.)	Input by FWD and REV on PU (FR-DU07/FR-PU04/FR-PU07)		199
6	Switchover mode Switch among PU operation, External operating, and NET operation while keeping the same operating status.			PU operation mode PU EXT NET External operation mode PU EXT NET NET operation mode PU EXT NET	200
7	External operation mode (PU operation interlock) X12 signal ON: Operation mode can be switched to the PU operation mode. (output stop during external operation) X12 signal OFF: Operation mode cannot be switched to the PU operation mode.				200

* The priorities of the frequency commands when *Pr. 79* = "3" are "Multi-speed operation (RL/RM/RH/REX) > PID control (X14) > terminal 4 analog input (AU) > digital input from the operation panel".

REMARKS

If switching of the operation mode is invalid even though *Pr. 79* is set, *refer to page 351*.

(1) Operation mode basics

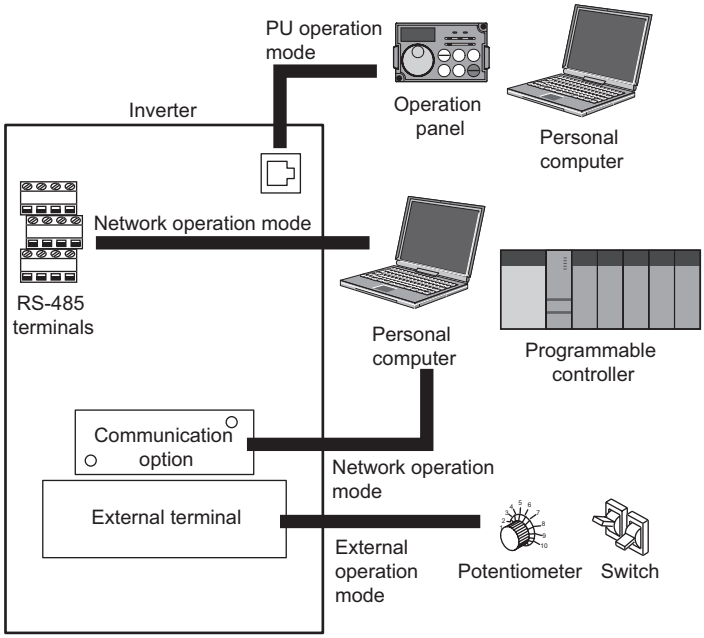

- The operation mode specifies the source of the start command and the frequency command for the inverter.
- Basically, there are following operation modes.
  - **External operation mode:** For inputting start command and frequency command by an external potentiometer and switches which are connected to the control circuit terminal.
  - **PU operation mode:** For inputting start command and frequency command by operation panel (FR-DU07), parameter unit (FR-PU04/FR-PU07) and RS-485 communication with PU connector.
  - **Network operation mode (NET operation mode):** For inputting start command and frequency command by RS-485 terminal and communication options.
- The operation mode can be selected from the operation panel or with the communication instruction code.

REMARKS

- Either "3" or "4" may be set to select the PU/external combined operation, and these settings differ in starting method.
- In the initial setting, the stop function by STOP RESET of the PU (FR-DU07/FR-PU07) (PU stop selection) is valid also in other than the PU operation mode. *(Pr. 75 Reset selection/disconnected PU detection/PU stop selection. Refer to page 186.)*

(2) Operation mode switching method

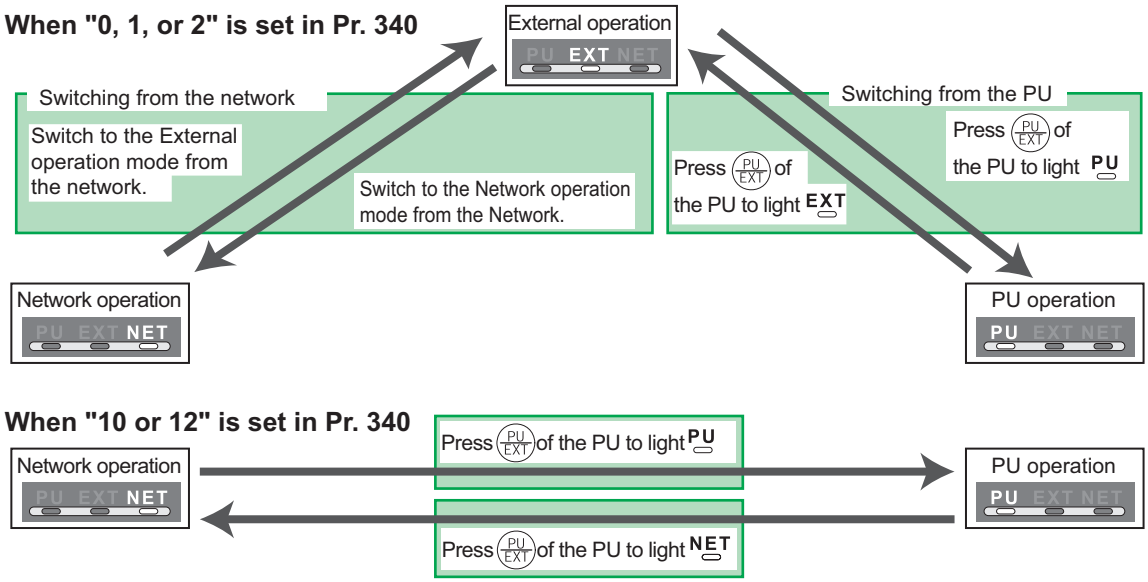

REMARKS

- For switching of operation by external terminals, refer to the following:
  PU operation external interlock signal (X12 signal) ☞ *page 200*
  PU-external operation switch-over signal (X16) ☞ *page 201*
  PU-NET operation switchover signal (X65), External-NET operation switchover signal (X66) ☞ *page 202*
  Pr. 340 Communication startup mode selection ☞ *page 203*

(3) Operation mode selection flow

In the following flowchart, select the basic parameter setting and terminal connection related to the operation mode.

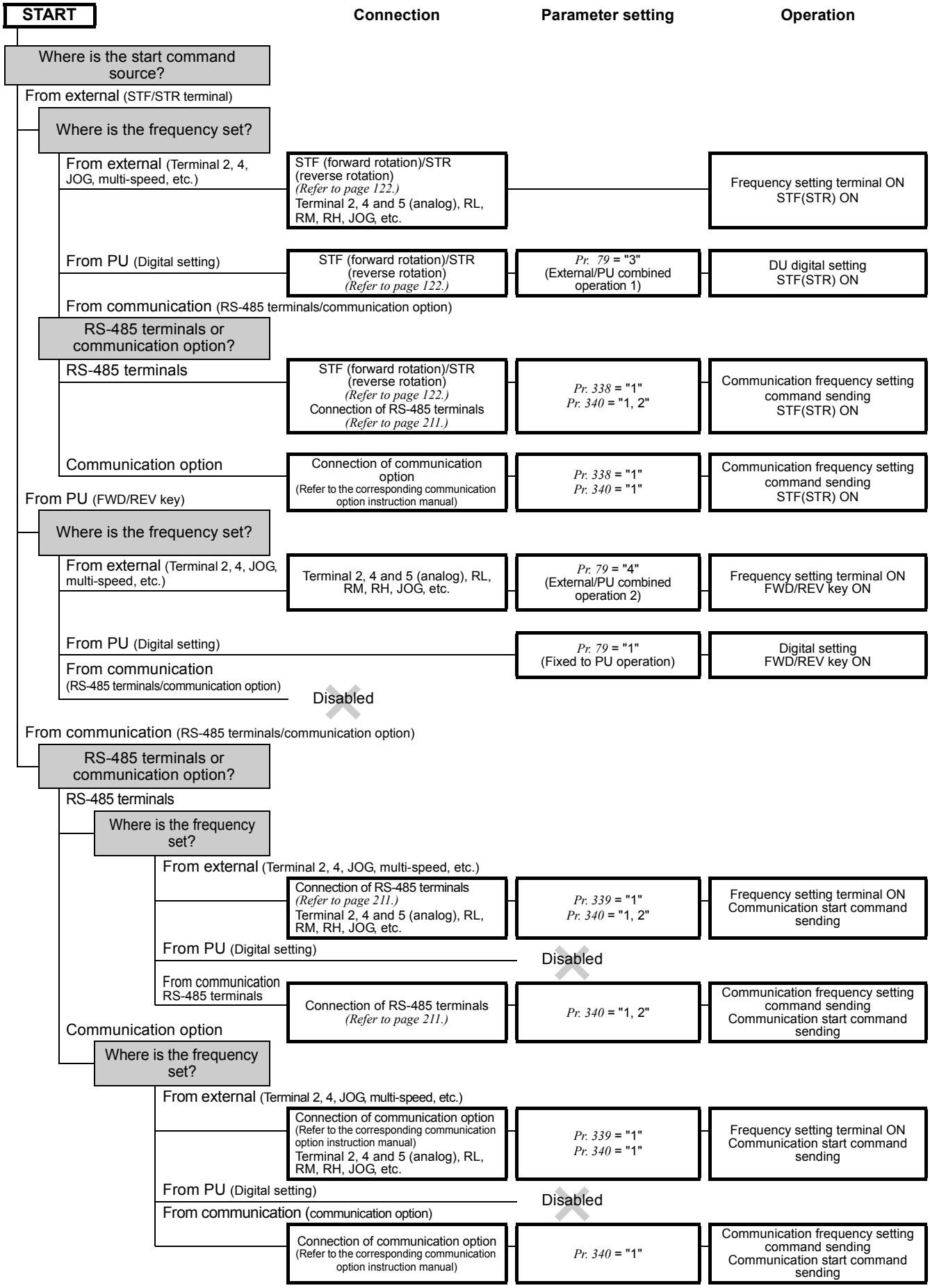

(4) External operation mode (setting "0" (initial value), "2")

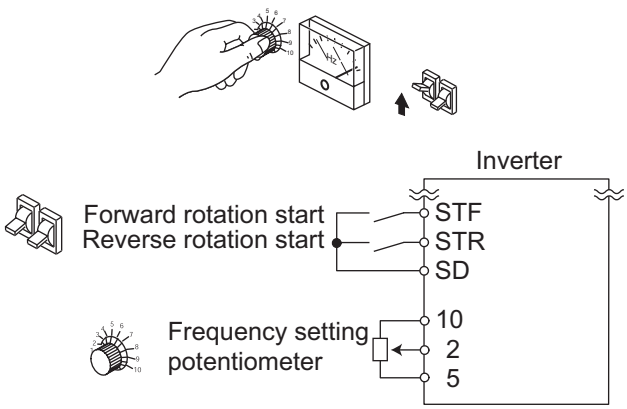

- Select the External operation mode when the start command and the frequency command are applied from a frequency setting potentiometer, start switch, etc. externally and connecting them to the control circuit terminals of the inverter.
- Generally, parameter change cannot be performed in the External operation mode. (Some parameters can be changed. Refer to the detailed description of each parameter.)
- When "0" or "2" is selected for *Pr. 79*, the inverter enters the External operation mode at power ON. (When using the Network operation mode, refer to *page 203*.)
- When parameter changing is seldom necessary, setting "2" fixes the operation mode to External operation mode. When frequent parameter changing is necessary, setting "0" (initial value) allows the operation mode to be changed easily to PU operation mode by pressing PU/EXT of the operation panel. When you switched to PU operation mode, always return to External operation mode.
- The STF and STR signal are used as a start command, and the voltage or current signal to terminal 2, 4, multi-speed signal, JOG signal, etc. are used as frequency command.

(5) PU operation mode (setting "1")

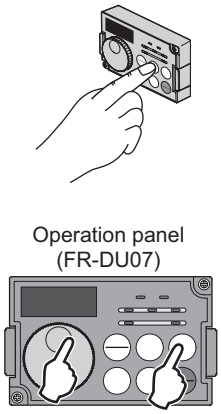

- Select the PU operation mode when applying start and speed command by the key operation of the operation panel (FR-DU07) or parameter unit (FR-PU04/FR-PU07) alone. Also select the PU operation mode when making communication using the PU connector.
- When "1" is selected for *Pr. 79*, the inverter enters the PU operation mode at power ON. You cannot change to the other operation mode.
- The setting dial of the operation panel can be used for setting like a potentiometer. *(Pr. 161 Frequency setting/key lock operation selection, refer to page 315.)*
- When PU operation mode is selected, the PU operation mode signal (PU) can be output.
  For the terminal used for the PU signal output, assign the function by setting "10 (positive logic) or 110 (negative logic)" in any of *Pr. 190 to Pr. 196 (output terminal function selection)*.

(6) PU/External combined operation mode 1 (setting "3")

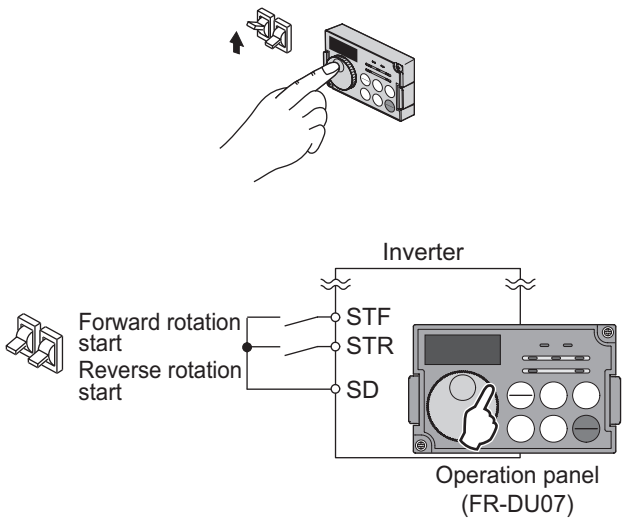

- Select the PU/external combined operation mode 1 when applying frequency command from the operation panel (FR-DU07) or parameter unit (FR-PU04/FR-PU07) and inputting the start command with the external start switch.
- Select "3" for *Pr. 79*. You cannot change to the other operation mode.
- When a frequency is input from the external signal by multi-speed setting, it has a higher priority than the frequency setting from the PU. When AU is ON, the command signal to terminal 4 is used.

(7) PU/External combined operation mode 2 (setting "4")

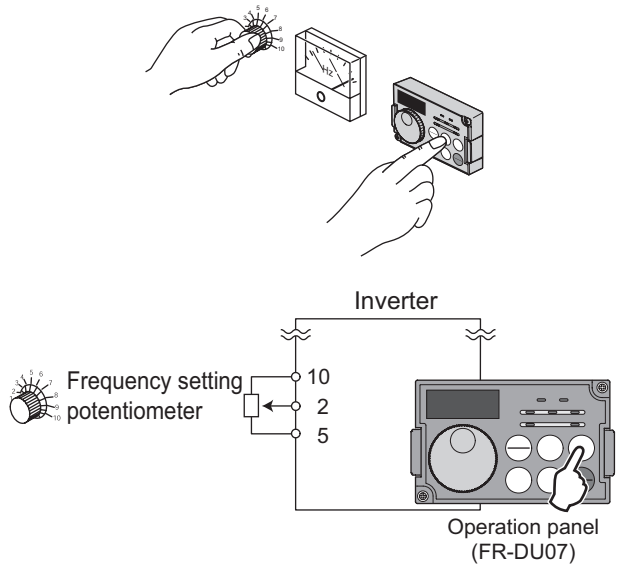

- Select the PU/External combined operation mode 2 when applying frequency command from the external potentiometer, multi-speed or JOG signal and inputting the start command by key operation of the operation panel (FR-DU07) or parameter unit (FR-PU04/FR-PU07).
- Select "4" for *Pr. 79*. You cannot change to the other operation mode.

(8) Switch-over mode (Setting "6")

- While continuing operation, you can switch among PU operation, External operation and Network operation (when RS-485 terminals or communication option is used).

Operation Mode Switching	Switching Operation/Operating Status
External operation → PU operation	Select the PU operation mode with the operation panel or parameter unit. · Rotation direction is the same as that of external operation. · The frequency set with the potentiometer (frequency setting command), etc. is used unchanged. (Note that the setting will disappear when power is switched OFF or the inverter is reset.)
External operation → NET operation	Send the mode change command to Network operation mode through communication. · Rotation direction is the same as that of external operation. · The value set with the setting potentiometer (frequency setting command) or like is used unchanged. (Note that the setting will disappear when power is switched OFF or the inverter is reset.)
PU operation → external operation	Press the external operation key of the operation panel, parameter unit. · The rotation direction is determined by the input signal of the external operation. · The set frequency is determined by the external frequency command signal.
PU operation → NET operation	Send the mode change command to Network operation mode through communication. · Rotation direction and set frequency are the same as those of PU operation.
NET operation → external operation	Send the mode change command to External operation mode through communication. · Rotation direction is determined by the external operation input signal. · The set frequency is determined by the external frequency command signal.
NET operation → PU operation	Select the PU operation mode with the operation panel or parameter unit. · The rotation direction and frequency command in Network operation mode are used unchanged.

(9) PU operation interlock (Setting "7")

- The PU operation interlock function is designed to forcibly change the operation mode to External operation mode when the PU operation interlock signal (X12) input turns OFF. This function prevents the inverter from being inoperative by the external command if the mode is accidentally left unswitched from the PU operation mode.
- Set "7" (PU operation interlock) in *Pr. 79*.
- For the terminal used for X12 signal (PU operation interlock signal) input, set "12" in any of *Pr. 178 to Pr. 189 (input terminal function selection)* to assign the function. (Refer to *page 122* for *Pr. 178 to Pr. 189*.)
- When the X 12 signal has not been assigned, the function of the MRS signal switches from MRS (output stop) to the PU operation interlock signal.

X12 (MRS) Signal	Function/Operation	
	Operation mode	Parameter write
ON	Operation mode (external, PU, NET) switching enabled Output stop during external operation	Parameter write enabled (*Pr. 77 Parameter write selection*, depending on the corresponding parameter write condition (*Refer to page 62* for the parameter list))
OFF	Forcibly switched to External operation mode External operation allowed. Switching to PU or NET operation mode disabled	Parameter write disabled with exception of *Pr. 79*

<Function/operation changed by switching ON/OFF the X12 (MRS) signal>

Operating Condition		X12 (MRS) Signal	Operation Mode	Operating Status	Switching to PU, NET Operation Mode
Operation mode	Status				
PU/NET	During stop	ON→OFF *1	External *2	If external operation frequency setting and start signal are entered, operation is performed in that status.	Disallowed
	Running	ON→OFF *1			Disallowed
External	During stop	OFF→ON	External *2	During stop	Enable
		ON→OFF			Disallowed
	Running	OFF→ON		During operation → output stop	Disallowed
		ON→OFF		Output stop → operation	Disallowed

*1 The operation mode switches to External operation mode independently of whether the start signal (STF, STR) is ON or OFF. Therefore, the motor is run in External operation mode when the X12 (MRS) signal is turned OFF with either of STF and STR ON.

*2 At fault occurrence, pressing STOP RESET of the operation panel resets the inverter.

CAUTION

- If the X12 (MRS) signal is ON, the operation mode cannot be switched to PU operation mode when the start signal (STF, STR) is ON.
- When the MRS signal is used as the PU interlock signal, the MRS signal serves as the normal MRS function (output stop) by turning on the MRS signal and then changing the *Pr. 79* value to other than "7" in the PU operation mode. Also as soon as "7" is set in *Pr. 79*, the signal acts as the PU interlock signal.
- When the MRS signal is used as the PU operation interlock signal, the logic of the signal is as set in *Pr. 17*. When *Pr. 17* = "2", read ON as OFF and OFF as ON in the above explanation.
- Changing the terminal assignment using *Pr. 178 to Pr. 189 (input terminal function selection)* may affect the other functions. Please set parameters after confirming the function of each terminal.

(10) Switching of operation mode by external signal (X16 signal)

- When external operation and operation from the operation panel are used together, use of the PU-external operation switching signal (X16) allows switching between the PU operation mode and External operation mode during a stop (during a motor stop, start command OFF).
- When *Pr. 79* = any of "0, 6, 7", the operation mode can be switched between the PU operation mode and External operation mode. (*Pr. 79* = "6" At switchover mode, operation mode can be changed during operation)
- For the terminal used for X16 signal input, set "16" in any of *Pr. 178 to Pr. 189 (input terminal function selection)* to assign the function.

Pr. 79 Setting		X16 Signal State Operation Mode		Remarks
		ON (external)	OFF (PU)	
0 (initial value)		External operation mode	PU operation mode	Can be switched to External, PU or NET operation mode
1		PU operation mode		Fixed to PU operation mode
2		External operation mode		Fixed to External operation mode (Can be switched to NET operation mode)
3, 4		External/PU combined operation mode		External/PU combined mode fixed
6		External operation mode	PU operation mode	Can be switched to External, PU or NET operation mode with operation continued
7	X12(MRS) ON	External operation mode	PU operation mode	Can be switched to External, PU or NET operation mode (Output stop in External operation mode)
	X12(MRS) OFF	External operation mode		Fixed to External operation mode (Forcibly switched to External operation mode)

REMARKS

- The operation mode status changes depending on the setting of *Pr. 340 Communication startup mode selection* and the ON/OFF states of the X65 and X66 signals. (For details, refer to *page 202*.)
- The priorities of *Pr. 79*, *Pr. 340* and signals are *Pr. 79* > X12 > X66 > X65 > X16 > *Pr. 340*.

CAUTION

- Changing the terminal assignment using *Pr. 178 to Pr. 189 (input terminal function selection)* may affect the other functions. Please set parameters after confirming the function of each terminal.

(11) Switching of operation mode by external signal (X65, X66 signals)

- When *Pr. 79* = any of "0, 2, 6", the operation mode switching signals (X65, X66) can be used to change the PU or External operation mode to Network operation mode during a stop (during a motor stop or start command OFF). (*Pr. 79* = "6" switch-over mode can be changed during operation)
- When switching between the Network operation mode and PU operation mode
  1) Set *Pr. 79* to "0" (initial value) or "6".
  2) Set "10 or 12" in *Pr. 340 Communication startup mode selection*.
  3) Set "65" in any of *Pr. 178 to Pr. 189* to assign the PU-NET operation switchover signal (X65) to the terminal.
  4) The operation mode changes to PU operation mode when the X65 signal turns ON, or to Network operation mode when the X65 signal turns OFF.

Pr. 340 Setting	*Pr. 79* Setting		X65 Signal State		Remarks
			ON (PU)	OFF (NET)	
10, 12	0 (initial value)		PU operation mode *1	NET operation mode *2	
	1		PU operation mode		Fixed to PU operation mode
	2		NET operation mode		Fixed to NET operation mode
	3, 4		External/PU combined operation mode		External/PU combined mode fixed
	6		PU operation mode *1	NET operation mode *2	Switching operation mode is enabled while running.
	7	X12(MRS)ON	Switching among the external and PU operation mode is enabled *3		Output stop in External operation mode
		X12(MRS)OFF	External operation mode		Forcibly switched to External operation mode

*1 NET operation mode when the X66 signal is ON.
*2 PU operation mode when the X16 signal is OFF. PU operation mode also when *Pr. 550 NET mode operation command source selection* = "0" (communication option command source) and the communication option is not fitted.
External operation mode when the X16 signal is ON.

- When switching between the network operation mode and External operation mode
  1) Set *Pr. 79* to "0" (initial value), "2", "6" or "7". (At the *Pr. 79* setting of "7", the operation mode can be switched when the X12 (MRS) signal turns ON.)
  2) Set "0 (initial value), 1 or 2" in *Pr. 340 Communication startup mode selection*.
  3) Set "66" in any of *Pr. 178 to Pr. 189* to assign the External-NET operation switching signal (X66) to the terminal.
  4) The operation mode changes to network operation mode when the X66 signal turns ON, or to External operation mode when the X66 signal turns OFF.

Pr. 340 Setting	*Pr. 79* Setting		X66 Signal State		Remarks
			ON (NET)	OFF(external)	
0 (initial value), 1, 2	0 (initial value)		NET operation mode *1	External operation mode *2	
	1		PU operation mode		Fixed to PU operation mode
	2		NET operation mode *1	External operation mode	Switching to PU operation mode is disabled.
	3, 4		External/PU combined operation mode		External/PU combined mode fixed
	6		NET operation mode *1	External operation mode *2	Switching operation mode is enabled while running.
	7	X12(MRS)ON	NET operation mode *1	External operation mode *2	Output stop in External operation mode
		X12(MRS)OFF	External operation mode		Forcibly switched to External operation mode

*1 PU operation mode is selected when *Pr. 550 NET mode operation command source selection* = "0" (communication option command source) and the communication option is not fitted.
*2 PU operation is selected when the X16 signal is OFF. When the X65 signal has been assigned, the operation mode changes with the ON/OFF state of the X65 signal.

REMARKS

- The priorities of *Pr. 79*, *Pr. 340* and signals are *Pr. 79* > X12 > X66 > X65 > X16 > *Pr. 340*.

CAUTION

- Changing the terminal assignment using *Pr. 178 to Pr. 189 (input terminal function selection)* may affect the other functions. Please set parameters after confirming the function of each terminal.

♦ Parameters referred to ♦

Pr. 15 Jog frequency ☞ *Refer to page 95.*
Pr. 4 to 6, Pr. 24 to 27, Pr. 232 to Pr. 239 Multi-speed operation ☞ *Refer to page 93.*
Pr. 75 Reset selection/disconnected PU detection/PU stop selection ☞ *Refer to page 186.*
Pr. 161 Frequency setting/key lock operation selection ☞ *Refer to page 315.*
Pr. 178 to Pr. 189 (Input terminal function selection) ☞ *Refer to page 122.*
Pr. 190 to Pr. 196 (Output terminal function selection) ☞ *Refer to page 128.*
Pr. 340 Communication startup mode selection ☞ *Refer to page 203.*
Pr. 550 NET mode operation command source selection ☞ *Refer to page 204.*

4.18.2 Operation mode at power ON (Pr. 79, Pr. 340)

When power is switched ON or when power comes back on after instantaneous power failure, the inverter can be started up in Network operation mode.
After the inverter has started up in the Network operation mode, parameter write and operation can be performed from a program.
Set this mode for communication operation using the RS-485 terminals or communication option.

Parameter Number	Name	Initial Value	Setting Range	Description
79	Operation mode selection	0	0 to 4, 6, 7	Select the operation mode. *(Refer to page 197.)*
340 *	Communication startup mode selection	0	0	As set in *Pr. 79*.
			1, 2	Started in network operation mode. When the setting is "2", it will resume the pre-instantaneous power failure operation mode after an instantaneous power failure occurs.
			10, 12	Started in network operation mode. Operation mode can be changed between the PU operation mode and Network operation mode from the operation panel. When the setting is "12", it will resume the pre-instantaneous power failure operation mode after an instantaneous power failure occurs.

The above parameters can be changed during a stop in any operation mode.
* The parameters can be set when *Pr. 160 User group read selection* = "0". However, the parameters can be set whenever the communication option is connected. *(Refer to page 190.)*.

(1) Specify operation mode at power ON *(Pr. 340)*

· Depending on the *Pr. 79* and *Pr. 340* settings, the operation mode at power ON (reset) changes as described below.

Pr. 340 Setting	*Pr. 79* Setting	Operation Mode at Power ON, Power Restoration, Reset	Operation Mode Switching
0 (initial value)	0 (initial value)	External operation mode	Switching among the External, PU, and NET operation mode is enabled *2
	1	PU operation mode	Fixed to PU operation mode
	2	External operation mode	Switching between the External and Net operation mode is enabled Switching to PU operation mode is disabled
	3, 4	External/PU combined operation mode	Operation mode switching is disabled
	6	External operation mode	Switching among the External, PU, and NET operation mode is enabled while running
	7	External operation mode when X12 (MRS) signal ON	Switching among the External, PU, and NET operation mode is enabled *2
		External operation mode when X12 (MRS) signal OFF	Fixed to External operation mode (Forcibly switched to External operation mode.)
1, 2 *1	0	NET operation mode	Same as when *Pr. 340* = "0"
	1	PU operation mode	
	2	NET operation mode	
	3, 4	External/PU combined operation mode	
	6	NET operation mode	
	7	NET operation mode when X12 (MRS) signal ON	
		External operation mode when X12 (MRS) signal OFF	
10, 12 *1	0	NET operation mode	Switching between the PU and NET operation mode is enabled *3
	1	PU operation mode	Same as when *Pr. 340* = "0"
	2	NET operation mode	Fixed to NET operation mode
	3, 4	External/PU combined operation mode	Same as when *Pr. 340* = "0"
	6	NET operation mode	Switching between the PU and NET operation mode is enabled while running *3
	7	External operation mode	Same as when *Pr. 340* = "0"

*1 The *Pr. 340* setting "2" or "12" is mainly used for communication operation using the inverter RS-485 terminals. When a value other than "9999" (selection of automatic restart after instantaneous power failure) is set in *Pr. 57 Restart coasting time*, the inverter will resume the same operation state which was in before after power has been restored from an instantaneous power failure.
When *Pr. 340* = "1, 10", a start command turns OFF if power failure has occurred and then restored during a start command is ON.
*2 The operation mode cannot be switched directly between the PU operation mode and Network operation mode.
*3 Operation mode can be changed between the PU operation mode and Network operation mode with (PU/EXT) key of the operation panel (FR-DU07) and X65 signal.

♦ Parameters referred to ♦

Pr. 57 Restart coasting time ☞ *Refer to page 152.*
Pr. 79 Operation mode selection ☞ *Refer to page 195.*

4.18.3 Start command source and speed command source during communication operation (Pr. 338, Pr. 339, Pr. 550, Pr. 551)

When the RS-485 terminals or communication option is used, the external start command and frequency command can be valid. Also, the command source in the PU operation mode can be selected.

Parameter Number	Name	Initial Value	Setting Range	Description
338	Communication operation command source	0	0	Start command source communication
			1	Start command source external
339	Communication speed command source	0	0	Frequency command source communication
			1	Frequency command source external
			2	Frequency command source external (Frequency command from communication is valid, frequency command from terminal 2 is invalid)
550 *	NET mode operation command source selection	9999	0	The communication option is the command source when NET operation mode.
			1	RS-485 terminals are the command source when NET operation mode.
			9999	Automatic communication option recognition Normally, RS-485 terminals are the command source. When a communication option is mounted, the communication option is the command source.
551 *	PU mode operation command source selection	2	1	RS-485 terminals are the command source when PU operation mode.
			2	PU connector is the command source when PU operation mode.

The above parameters can be set when *Pr. 160 User group read selection* = "0". However, the parameters can be set whenever the communication option is connected. *(Refer to page 190.)*

* *Pr 550* and *Pr. 551* are always write-enabled.

(1) Select the command source of the Network operation mode *(Pr. 550)*

- Either the RS-485 terminals or communication option can be specified as the command source in Network operation mode.
- For example, set *Pr. 550* to "1" when executing parameter write, start command or frequency command from the inverter RS-485 terminals in the Network operation mode independently of whether the communication option is connected or not.

CAUTION

- Since *Pr. 550* = "9999" (automatic recognition of the communication option) in the initial setting, parameter write, start command and frequency command cannot be executed by communication using the inverter RS-485 terminals when the communication option is fitted. (Monitor and parameter read can be performed.)

(2) Select the command source of the PU operation mode *(Pr. 551)*

- Either the PU connector or RS-485 terminals can be specified as the source in the PU operation mode.
- When performing parameter write, giving start command and frequency command from communication with the RS-485 terminals in PU operation mode, set "1" in *Pr. 551*.

CAUTION

- The PU operation mode has a higher priority when *Pr. 550* = "1" (NET mode RS-485 terminals) and *Pr. 551* = "1" (PU mode RS-485 terminals). When the communication option is not fitted, therefore, the operation mode cannot be switched to Network operation mode.

Pr. 550 Setting	*Pr. 551* Setting	Command Source			Remarks
		PU connector	RS-485 terminals	Communication option	
0	1	×	PU operation mode *1	NET operation mode *2	
	2 (initial value)	PU operation mode	×	NET operation mode *2	
1	1	×	PU operation mode *1	×	Switching to NET operation mode disabled
	2 (initial value)	PU operation mode	NET operation mode	×	
9999 (initial value)	1	×	PU operation mode *1	NET operation mode *2	
	2 (initial value)	PU operation mode	×	NET operation mode	Communication option fitted
			NET operation mode	×	Communication option not fitted

*1 The Modbus-RTU protocol cannot be used in the PU operation mode. When using the Modbus-RTU protocol, set *Pr. 551* to "2".
*2 When the communication option is not fitted, the operation mode cannot be switched to Network operation mode.

(3) Controllability through communication

Operation Location	Condition (*Pr. 551* Setting)	Item \ Operation Mode	PU Operation	External Operation	External/PU Combined Operation Mode 1 (*Pr. 79* = 3)	External/PU Combined Operation Mode 2 (*Pr. 79* = 4)	NET Operation (when RS-485 terminals are used) *6	NET Operation (when communication option is used) *7
Control by RS-485 communication from PU connector	2 (PU connector)	Run command (start)	○	×	×	○	×	
		Run command (stop)	○	★ *3	★ *3	○	★ *3	
		Running frequency setting	○	×	○	×	×	
		Monitor	○	○	○	○	○	
		Parameter write	○ *4	× *5	○ *4	○ *4	× *5	
		Parameter read	○	○	○	○	○	
		Inverter reset	○	○	○	○	○	
	Except for 2	Run command (start)	×	×	×	×	×	
		Run command (stop)	★ *3	★ *3	★ *3	★ *3	★ *3	
		Running frequency setting	×	×	×	×	×	
		Monitor	○	○	○	○	○	
		Parameter write	× *5	× *5	× *5	× *5	× *5	
		Parameter read	○	○	○	○	○	
		Inverter reset	○	○	○	○	○	
Control by communication from RS-485 terminals	1 (RS-485 terminals)	Run command(start, stop)	○	×	×	○	×	
		Running frequency setting	○	×	○	×	×	
		Monitor	○	○	○	○	○	
		Parameter write	○ *4	× *5	○ *4	○ *4	× *5	
		Parameter read	○	○	○	○	○	
		Inverter reset	○	○	○	○	○	
	Except for 1	Run command (start, stop)	×	×	×	×	○ *1	×
		Running frequency setting	×	×	×	×	○ *1	×
		Monitor	○	○	○	○	○	○
		Parameter write	× *5	× *5	× *5	× *5	○ *4	× *5
		Parameter read	○	○	○	○	○	○
		Inverter reset	×	×	×	×	○ *2	×
Control by communication from communication option	—	Run command (start, stop)	×	×	×	×	×	○ *1
		Running frequency setting	×	×	×	×	×	○ *1
		Monitor	○	○	○	○	○	○
		Parameter write	× *5	× *5	× *5	× *5	× *5	○ *4
		Parameter read	○	○	○	○	○	○
		Inverter reset	×	×	×	×	×	○ *2
Control circuit external terminals	—	Inverter reset	○	○	○	○	○	
		Run command (start, stop)	×	○	○	×	× *1	
		Frequency setting	×	○	×	○	× *1	

○: Enabled, ×: Disabled, ★ : Some are enabled

*1 As set in *Pr. 338 Communication operation command source* and *Pr. 339 Communication speed command source*. *(Refer to page 204)*
*2 At occurrence of RS-485 communication error, the inverter cannot be reset from the computer.
*3 Enabled only when stopped by the PU. At a PU stop, PS is displayed on the operation panel. As set in *Pr. 75 PU stop selection* . *(Refer to page 186)*
*4 Some parameters may be write-disabled according to the *Pr. 77 Parameter write selection* setting and operating status. *(Refer to page 189)*
*5 Some parameters are write-enabled independently of the operation mode and command source presence/absence. When *Pr. 77* = 2, write is enabled. (Refer to *page 62* for the parameter list)Parameter clear is disabled.
*6 When *Pr. 550 NET mode operation command source selection* = 1 (RS-485 terminals valid) or *Pr. 550 NET mode operation command source selection* = 9999 and the communication option is not fitted.
*7 When *Pr. 550 NET mode operation command source selection* = 0 (communication option valid) or *Pr. 550 NET mode operation command source selection* = 9999 and the communication option is fitted.

(4) Operation at error occurrence

Error Definition	Operation Mode / Condition (*Pr. 551* setting)	PU Operation	External Operation	External/PU Combined Operation Mode 1 (*Pr. 79* =3)	External/PU Combined Operation Mode 2 (*Pr. 79* =4)	NET Operation (when RS-485 terminals are used) *5	NET Operation (when communication option is used) *6
Inverter fault	—	Stop					
PU disconnection of the PU connector	2 (PU connector)	Stop/continued *1, 4					
	1 (RS-485 terminals)	Stop/continued *1					
Communication error of PU connector	2 (PU connector)	Stop/ continued *2	Continued		Stop/continued *2	Continued	
	1 (RS-485 terminals)	Continued					
Communication error of RS-485 terminals	1 (RS-485 terminals)	Stop/ continued *2	Continued		Stop/continued *2	Continued	
	2 (PU connector)	Continued				Stop/continued *2	Continued
Communication error of communication option	—	Continued				Stop/continued *3	Continued

*1 Can be selected using *Pr. 75 Reset selection/disconnected PU detection/PU stop selection*

*2 Can be selected using *Pr. 122 PU communication check time interval*, *Pr. 336 RS-485 communication check time interval*, *Pr. 502 Stop mode selection at communication error* or *Pr. 539 Modbus-RTU communication check time interval*.

*3 As controlled by the communication option.

*4 In the PU jog operation mode, operation is always stopped when the PU is disconnected. Whether fault (E.PUE) occurrence is allowed or not is as set in *Pr. 75 Reset selection/disconnected PU detection/PU stop selection*.

*5 When *Pr. 550 NET mode operation command source selection* = 1 (RS-485 terminals valid) or *Pr. 550 NET mode operation command source selection* = 9999 and the communication option is not fitted

*6 When *Pr. 550 NET mode operation command source selection* = 0 (communication option valid) or *Pr. 550 NET mode operation command source selection* = 9999 and the communication option is fitted

(5) Selection of command source in Network operation mode *(Pr. 338, Pr. 339)*

- There are two control sources: operation command source, which controls the signals related to the inverter start command and function selection, and speed command source, which controls signals related to frequency setting.
- In Network operation mode, the commands from the external terminals and communication (RS-485 terminals or communication option) are as listed below.

Operation Location Selection			*Pr. 338 Communication operation command source*		0: NET			1: External			Remarks
			Pr. 339 Communication speed command source		0: NET	1:External	2:External	0: NET	1:External	2:External	
Fixed function (Terminal-equivalent function)			Running frequency from communication		NET	—	NET	NET	—	NET	
			Terminal 2		—	External	—	—	External	—	
			Terminal 4		—	External		—	External		
			Terminal 1		Compensation						
Selective function	*Pr. 178 to Pr. 189* setting	0	RL	Low speed operation command/ remote setting clear	NET	External		NET	External		*Pr. 59* = "0" (multi-speeds) *Pr. 59* = "1 , 2" (remote)
		1	RM	Middle-speed operation command/ remote setting deceleration	NET	External		NET	External		
		2	RH	High speed operation command/ remote setting acceleration	NET	External		NET	External		
		3	RT	Second function selection	NET			External			
		4	AU	Terminal 4 input selection	—	Combined		—	Combined		
		5	JOG	Jog operation selection	—			External			
		6	CS	Selection of automatic restart after instantaneous power failure	External						
		7	OH	External thermal relay input	External						
		8	REX	15-speed selection	NET	External		NET	External		*Pr. 59* = "0" (multi-speeds)
		10	X10	Inverter run enable signal	External						
		11	X11	FR-HC or MT-HC connection, instantaneous power failure detection	External						
		12	X12	PU operation external interlock	External						
		13	X13	External DC injection brake operation is started	NET			External			
		14	X14	PID control valid terminal	NET	External		NET	External		
		16	X16	PU/External operation switchover	External						
		24	MRS	Output stop	Combined			External			*Pr. 79* ≠ "7"
				PU operation interlock	External						*Pr. 79* = "7" When X12 signal is not assigned
		25	STOP	Start self-holding selection	—			External			
		50	SQ	Sequence start	NET			External			
		51	X51	Fault clear signal	Combined			External			
		60	STF	Forward rotation command	NET			External			
		61	STR	Reverse rotation command	NET			External			
		62	RES	Reset	External						
		63	PTC	PTC thermistor input	External						
		64	X64	PID forward action switchover	NET	External		NET	External		
		65	X65	PU/NET operation switchover	External						
		66	X66	External/NET operation switchover	External						
		67	X67	Command source switchover	External						
		70	X70	DC feeding operation permission	NET			External			
		71	X71	DC feeding cancel	NET			External			
		72	X72	PID integral value reset	NET	External		NET	External		
		77	X77	Pre-charge end command	NET	External		NET	External		
		78	X78	Second pre-charge end command	NET	External		NET	External		

[Explanation of table]

External : Command only from control terminal signal is valid.
NET : Command only from communication is valid
Combined : Command from either of external terminal and communication is valid.
— : Command from either of external terminal and communication is invalid.
Compensation : Command by signal from external terminal is only valid when *Pr. 28 Multi-speed input compensation selection* = "1"

REMARKS

- The command source of communication is as set in *Pr. 550* and *Pr. 551*.
- The *Pr. 338* and *Pr. 339* settings can be changed while the inverter is running when *Pr. 77* = "2". Note that the setting change is reflected after the inverter has stopped. Until the inverter has stopped, communication operation command source and communication speed command source before the setting change are valid.

(6) Switching of command source by external terminal (X67)

- In Network operation mode, the command source switching signal (X67) can be used to switch the start command source and speed command source. This signal can be utilized to control the signal input from both the control terminal and communication.
- Set "67" in any of *Pr. 178 to Pr. 189* (input terminal function selection) to assign the X67 signal to the control terminal.
- When the X67 signal is OFF, the start command source and speed command source are control terminal.

X67 Signal State	Start Command Source	Speed Command Source
No signal assignment	According to *Pr. 338*	According to *Pr. 339*
ON		
OFF	Command is valid only from control terminal signal.	

REMARKS

- The ON/OFF state of the X67 signal is reflected only during a stop. It is reflected after a stop when the terminal is switched while the inverter is running.
- When the X67 signal is OFF, a reset via communication is disabled.

CAUTION

- Changing the terminal assignment using *Pr. 178 to Pr. 189 (input terminal function selection)* may affect the other functions. Please set parameters after confirming the function of each terminal.

♦ Parameters referred to ♦

Pr. 28 Multi-speed input compensation selection ☞ *Refer to page 97.*
Pr. 59 Remote function selection ☞ *Refer to page 98.*
Pr. 79 Operation mode selection ☞ *Refer to page 195.*

4.19 Communication operation and setting

Purpose	Parameter that must be Set		Refer to Page
Communication operation from PU connector	**Initial setting of computer link communication (PU connector)**	**Pr. 117 to Pr. 124**	214
Communication operation from RS-485 terminals	**Initial setting of computer link communication (RS-485 terminals)**	**Pr. 331 to Pr. 337, Pr. 341, Pr. 502, Pr. 779**	
	Modbus-RTU communication specifications	**Pr. 331, Pr. 332, Pr. 334, Pr. 343, Pr. 502, Pr. 549, Pr. 779**	232
	BACnet MS/TP protocol	**Pr. 331, Pr. 332, Pr. 390, Pr. 549, Pr. 726 to Pr. 729**	247
Restrictions on parameter write through communication	**Communication EEPROM write selection**	**Pr. 342**	216
Operation selection the at a communication error	**Stop mode selection at communication error**	**Pr. 502, Pr. 779**	216
Operation by PLC function	**PLC function**	**Pr. 414, Pr. 415, Pr. 498, Pr. 506 to Pr. 515, Pr. 826 to Pr. 865**	260

4.19.1 Wiring and configuration of PU connector

Using the PU connector, you can perform communication operation from a personal computer etc.
When the PU connector is connected with a personal, FA or other computer by a communication cable, a user program can run and monitor the inverter or read and write to parameters.

(1) PU connector pin-outs

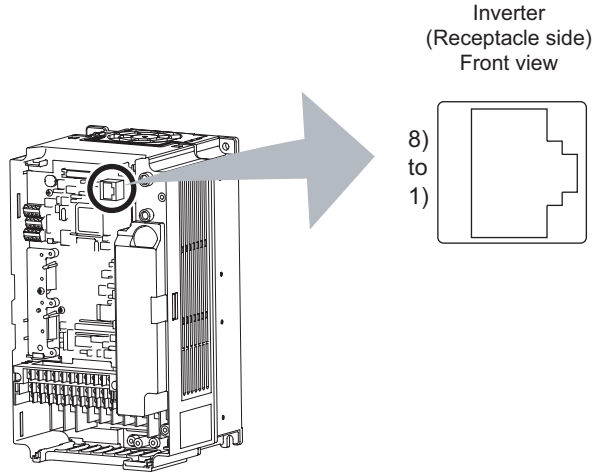

Pin Number	Name	Description
1)	SG	Ground (connected to terminal 5)
2)	—	Operation panel power supply
3)	RDA	Inverter receive+
4)	SDB	Inverter send-
5)	SDA	Inverter send+
6)	RDB	Inverter receive-
7)	SG	Ground (connected to terminal 5)
8)	—	Operation panel power supply

CAUTION

- Pins No. 2 and 8 provide power to the operation panel or parameter unit. Do not use these pins for RS-485 communication.
- Do not connect the PU connector to the computer's LAN board, FAX modem socket or telephone modular connector. The product could be damaged due to differences in electrical specifications.

(2) PU connector communication system configuration and wiring

● System configuration

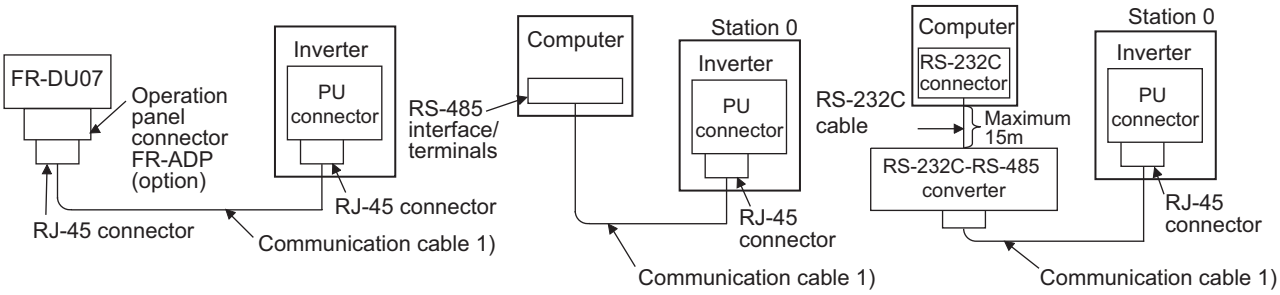

● Connection with RS-485 computer

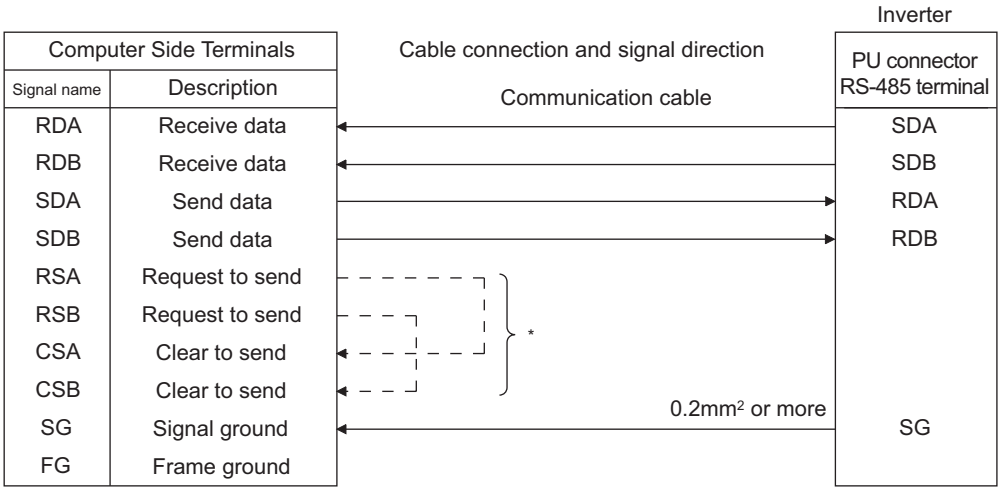

* Make connections in accordance with the manual of the computer used. Fully check the terminal numbers of the computer since they change with the model.

REMARKS

- Refer to the following when fabricating the cable on the user side.
  Commercially available product examples (as of October 2008)

	Product	Type	Maker
1)	Communication cable	SGLPEV-T (Cat5e/300m) 24AWG × 4P *	Mitsubishi Cable Industries, Ltd.

* Do not use pins No. 2, 8 of the communication cable.

CAUTION

When performing RS-485 communication with multiple inverters, use the RS-485 terminals. *(Refer to page 212)*

4.19.2 Wiring and arrangement of RS-485 terminals

(1) RS-485 terminal layout

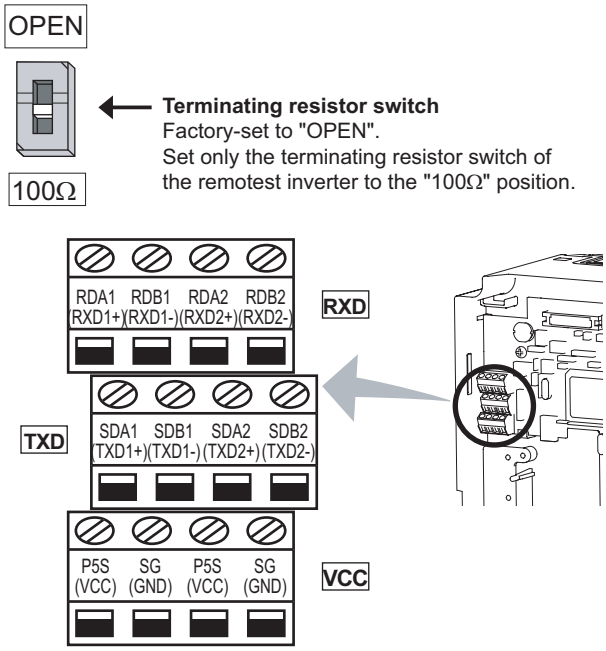

Name	Description
RDA1 (RXD1+)	Inverter receive+
RDB1 (RXD1-)	Inverter receive-
RDA2 (RXD2+)	Inverter receive+ (for branch)
RDB2 (RXD2-)	Inverter receive- (for branch)
SDA1 (TXD1+)	Inverter send+
SDB1 (TXD1-)	Inverter send-
SDA2 (TXD2+)	Inverter send+ (for branch)
SDB2 (TXD2-)	Inverter send- (for branch)
P5S (VCC)	5V Permissible load current 100mA
SG (GND)	Ground (connected to terminal SD)

(2) Connection of RS-485 terminals and wires

Loosen the terminal screw and insert the cable into the terminal.

Screw size	M2
Tightening torque	0.22N•m to 0.25N•m
Cable size	0.3mm^2 to 0.75mm^2
Screwdriver	Small ⊖ flathead screwdriver (Tip thickness: 0.4mm /tip width: 2.5mm)

Wire the stripped cable after twisting it to prevent it from becoming loose. In addition, do not solder it.

Use a blade terminal as necessary.

CAUTION

Undertightening can cause signal loss or malfunction. Overtightening can cause a short circuit or malfunction due to damage to the screw or unit.

REMARKS

Information on blade terminals

Blade terminals available on the market: (as of March 2008)

●Phoenix Contact Co.,Ltd.

Terminal Screw Size	Wire Size (mm^2)	Blade Terminal Model		Blade terminal crimping tool
		with insulation sleeve	without insulation sleeve	
M2	0.3, 0.5	AI 0,5-6WH	A 0,5-6	CRIMPFOX ZA3

●NICHIFU Co.,Ltd.

Terminal Screw Size	Wire Size (mm^2)	Blade terminal product number	Insulation product number	Blade terminal crimping tool
M2	0.3 to 0.75	BT 0.75-7	VC 0.75	NH 67

Use shielded or twisted cables for connection to the control circuit terminals and run them away from the main and power circuits (including the 200V relay sequence circuit).

When using the blade terminal (without insulation sleeve), use care so that the stranded wires do not come out.

(3) RS-485 terminal system configuration

● Connection of a computer to the inverter (1:1 connection)

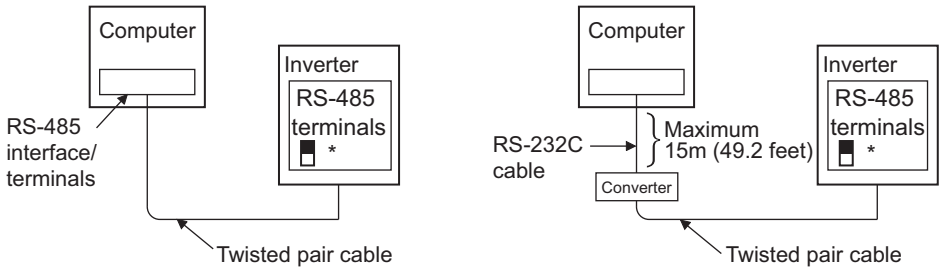

*Set the terminating resistor switch to the "100Ω" position.

● Combination of computer and multiple inverters (1:n connection)

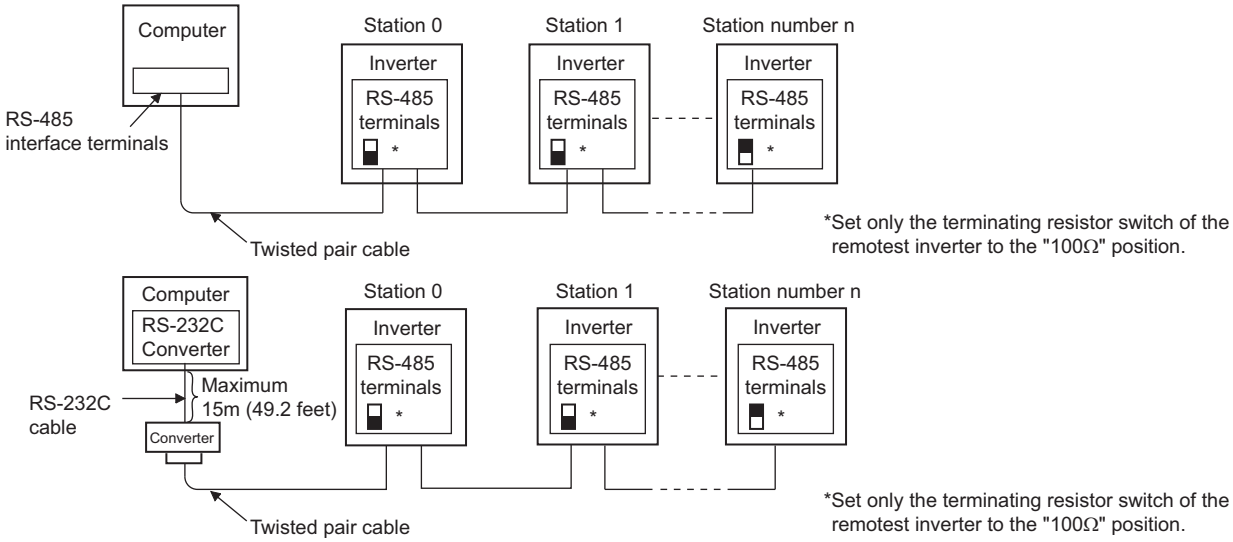

*Set only the terminating resistor switch of the remotest inverter to the "100Ω" position.

*Set only the terminating resistor switch of the remotest inverter to the "100Ω" position.

(4) RS-485 terminal wiring method

● **Wiring of one RS-485 computer and one inverter**

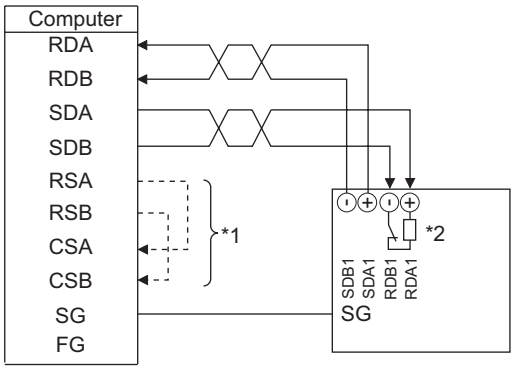

● **Wiring of one RS-485 computer and "n" inverters (several inverters)**

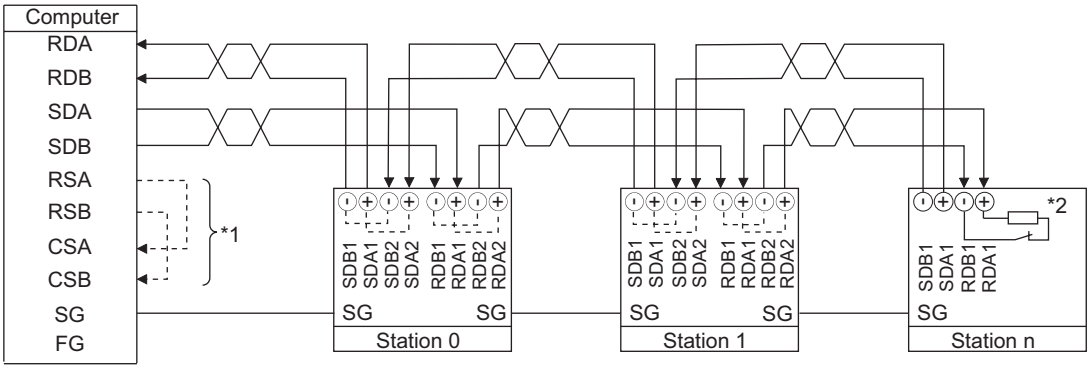

*1 Make connections in accordance with the manual of the computer used.
Fully check the terminal numbers of the computer since they change with the model.

*2 For the inverter farthest from the computer, set the terminating resistor switch to ON (100Ω side).

REMARKS

For branching, connect the wires as shown below.

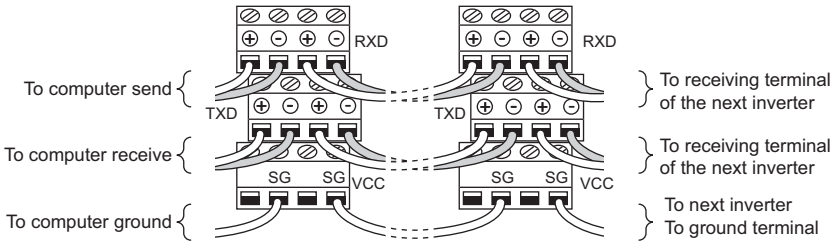

(5) 2-wire type connection

If the computer is 2-wire type, pass wires across receiving terminals and transmission terminals of the RS-485 terminals to enable 2-wire type connection with the inverter.

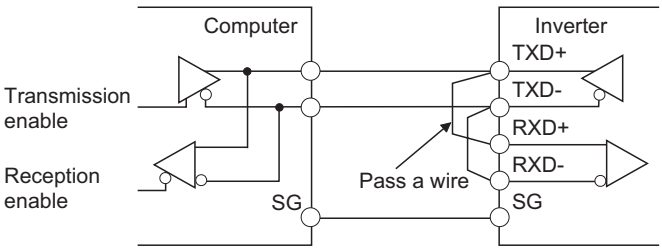

REMARKS

A program should be created so that transmission is disabled (receiving state) when the computer is not sending and reception is disabled (sending state) during sending to prevent the computer from receiving its own data.

4.19.3 Initial settings and specifications of RS-485 communication (Pr. 117 to Pr. 124, Pr. 331 to Pr. 337, Pr. 341, Pr. 549)

Used to perform required settings for communication between the inverter and personal computer.

- There are two different communications: communication using the PU connector of the inverter and communication using the RS-485 terminals.
- You can perform parameter setting, monitor, etc. using the Mitsubishi inverter protocol (computer link communication), Modbus-RTU protocol and BACnet MS/TP protocol.
- To make communication between the personal computer and inverter, initialization of the communication specifications must be made to the inverter.
  Data communication cannot be made if the initial settings are not made or there is any setting error.

[PU connector communication related parameter]

Parameter Number	Name	Initial Value	Setting Range	Description	
117	**PU communication station number**	0	0 to 31	Specifies the inverter station number. Set the inverter station numbers when two or more inverters are connected to one personal computer.	
118	**PU communication speed**	192	48, 96, 192, 384	Set the communication speed. The setting value × 100 equals the communication speed. For example, the communication speed is 19200bps when the setting value is "192".	
119	**PU communication stop bit length**	1		Stop bit length	Data length
			0	1bit	8bit
			1	2bit	
			10	1bit	7bit
			11	2bit	
120	**PU communication parity check**	2	0	Without parity check	
			1	With odd parity check	
			2	With even parity check	
121	**Number of PU communication retries**	1	0 to 10	Set the permissible number of retries at occurrence of a data receive error. If the number of consecutive errors exceeds the permissible value, the inverter trips.	
			9999	If a communication error occurs, the inverter will not come to trip.	
122	**PU communication check time interval**	9999	0	No PU connector communication	
			0.1 to 999.8s	Set the interval of communication check time. If a no-communication state persists for longer than the permissible time, the inverter trips.	
			9999	No communication check	
123	**PU communication waiting time setting**	9999	0 to 150ms	Set the waiting time between data transmission to the inverter and response.	
			9999	Set with communication data.	
124	**PU communication CR/LF selection**	1	0	Without CR/LF	
			1	With CR	
			2	With CR/LF	

The above parameters can be set when *Pr. 160 User group read selection* = "0". *(Refer to page 190)*

[RS-485 terminal communication related parameter]

Parameter Number	Name	Initial Value	Setting Range		Description
331 Ver.UP	RS-485 communication station number	0	*Pr. 549*		Set the inverter station number. (same specifications as *Pr. 117*)
			0 (Mitsubishi protocol)	0 to 31 *6	
			1 (Modbus-RTU)	0 to 247	
			2 (BACnet)	0 to 127 *6	
332 Ver.UP	RS-485 communication speed	96	*Pr. 549*		Used to select the communication speed. (same specifications as *Pr. 118*)
			0 (Mitsubishi protocol)	3, 6, 12, 24, 48, 96, 192, 384 *6	
			1 (Modbus-RTU)		
			2 (BACnet)	96, 192, 384, 768 *6	
333 *1*2	RS-485 communication stop bit length	1	0, 1, 10, 11		Select stop bit length and data length. (same specifications as *Pr. 119*)
334 *1	RS-485 communication parity check selection	2	0, 1, 2		Select the parity check specifications. (same specifications as *Pr. 120*)
335 *1*3	RS-485 communication retry count	1	0 to 10, 9999		Set the permissible number of retries at occurrence of a data receive error. (same specifications as *Pr. 121*)
336 *3	RS-485 communication check time interval	0s	0		RS-485 communication is available, but the inverter trips in the NET operation mode.
			0.1 to 999.8s		Set the interval of communication check time. (same specifications as *Pr. 122*)
			9999		No communication check
337 *1*3	RS-485 communication waiting time setting	9999	0 to 150ms, 9999		Set the waiting time between data transmission to the inverter and response. (same specifications as *Pr. 123*)
341 *1*3	RS-485 communication CR/LF selection	1	0, 1, 2		Select presence/absence of CR/LF. (same specifications as *Pr. 124*)
549 Ver.UP	Protocol selection	1	0		Mitsubishi inverter (computer link) protocol
			1		Modbus-RTU protocol *4
			2		BACnet MS/TP protocol *4

*1 Invalid during the BACnet MS/TP protocol.
*2 For the Modbus-RTU protocol, the data length is always 8 bits and the stop bit depends on the *Pr. 334* setting. *(Refer to page 232)*
For the BACnet MS/TP protocol, the data length is always 8 bits and the stop bit is always 8 bit.
*3 Invalid during the Modbus-RTU protocol.
*4 The Modbus-RTU protocol and BACnet MS/TP protocol are valid for only communication from the RS-485 terminals.
*5 The above parameters can be set when *Pr. 160 User group read selection* = "0". *(Refer to page 190)*
*6 The inverter works with the initial parameter setting if a value other than the setting range is set.

Ver.UP ..... The specification differs according to the manufacture date. *Refer to page 400* and check the SERIAL.

CAUTION

- If communication is made without *Pr. 336 RS-485 communication check time interval* being changed from "0" (initial value), monitor, parameter read, etc. can be performed, but the inverter results in an alarm as soon as it is switched to the NET operation mode. If the operation mode at power ON is the Network operation mode, a communication fault (E.SER) occurs after first communication.
  When performing operation or parameter write through communication, set "9999" or more to *Pr. 336*. (The setting depends on the computer side program.) *(Refer to page 224)*
- Always reset the inverter after making the initial settings of the parameters. After you have changed the communication-related parameters, communication cannot be made until the inverter is reset.

4.19.4 Communication EEPROM write selection (Pr. 342)

When parameter write is performed from PU connector, RS-485 terminal, and communication option connected to the inverter, parameter's storage device can be changed from EEPROM + RAM to only RAM. Set this parameter when frequent parameter changes are required.

Parameter Number	Name	Initial Value	Setting Range	Description
342	Communication EEPROM write selection	0	0	Parameter values written by communication are written to the EEPROM and RAM.
			1	Parameter values written by communication are written to the RAM.

The above parameters can be set when *Pr. 160 User group read selection* = "0". However, it can be set any time when the communication option is connected. *(Refer to page 190)*

- When changing the parameter values frequently, set "1" in *Pr. 342* to write them to the RAM. The life of the EEPROM will be shorter if parameter write is performed frequently with the setting unchanged from "0 (initial value)" (EEPROM write).

REMARKS

- When *Pr. 342* is set to "1" (only RAM write), the new values of the parameters will be cleared at power supply-OFF of the inverter. Therefore, the parameter values available when power is switched ON again are the values stored in EEPROM previously.

4.19.5 Operation selection at communication error (Pr.502, Pr.779)

For communication using RS-485 terminals or a communication option, operation at a communication error can be selected. The operation is active under the Network operation mode.

Parameter number	Name	Initial value	Setting range	Description			
				At error occurrence	Indication	Fault output	At error removal
502 Ver.UP	Stop mode selection at communication error	0	0	Coasts to stop	E.SER*	Output	Stops (E.SER)*
			1	Decelerates to stop	E.SER after stop*	Output after stop	Stops (E.SER)*
			2	Decelerates to stop	E.SER after stop*	Without output	Restarts
			3	Continues running at *Pr. 779*	—	Without output	Operates normally
779 Ver.UP	Operation frequency during communication error	9999	0 to 400Hz	Motor runs at the specified frequency at a communication error.			
			9999	Motor runs at the frequency used before the communication error.			

* E.OP1 or E.OP2 appears when using a communication option.

The above parameters can be set when *Pr. 160 User group read selection* = "0." *(Refer to page 190.)*

Ver.UP ..... The specification differs according to the manufacture date. *Refer to page 400* and check the SERIAL.

- Select the stop operation at the retry count excess (*Pr. 335*, only with Mitsubishi inverter protocol) or at a signal loss detection (*Pr. 336*, *Pr. 539*).
- Operation at an error

Pr. 502 setting	Operation	Indication	Fault output
0 (Initial setting)	Coasts to stop	E.SER is lit*	Output
1	Decelerates to stop	E.SER is lit after stop*	Output after stop
2			Not output
3	Operates at the frequency set in *Pr.779*.	Normal indication	Not output

- Operation after the error is removed

Pr. 502 setting	Operation	Indication	Fault output
0 (Initial setting)	Stop status continues	E.SER continues*	Output continues
1			
2	Restarts	Normal indication	Not output
3	Operates normally	Normal indication	Not output

* E.OP1 or E.OP2 appears when using a communication option.

●*Pr. 502* ="0 (initial setting)"

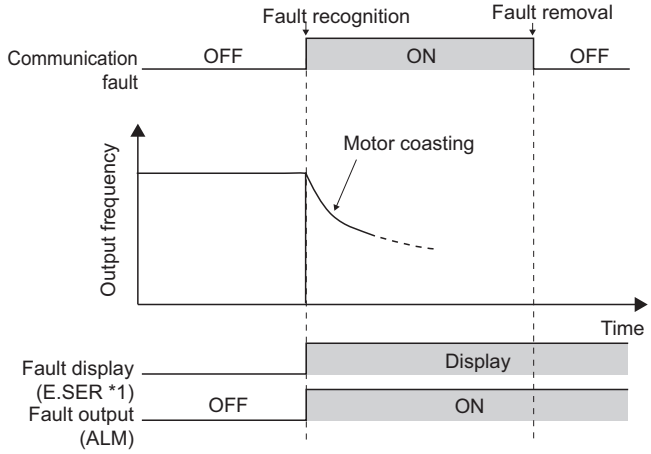

●*Pr. 502* ="1"

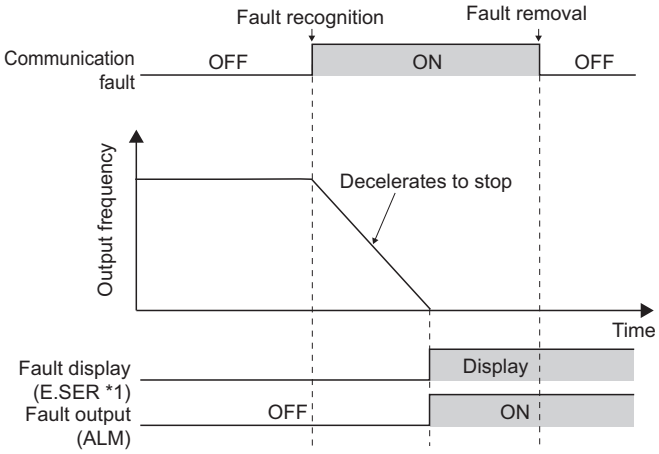

●*Pr. 502* ="2"

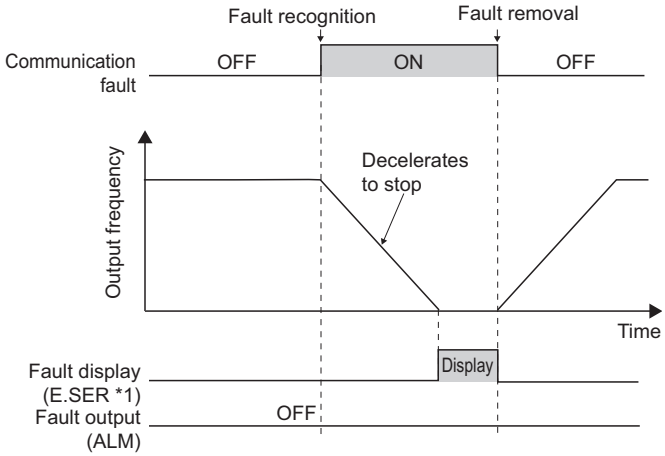

●*Pr. 502* ="3"

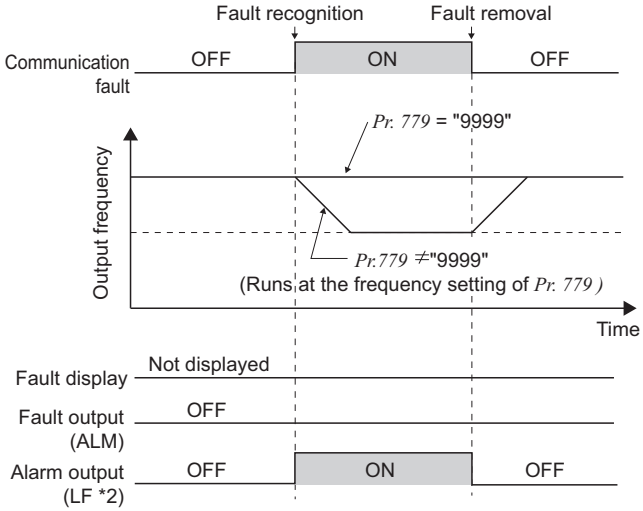

*1 E.OP1 or E.OP2 appears when using communication through communication option.

*2 When a communication error is detected while *Pr.502* = "3," the alarm (LF) is output to an output terminal of the inverter. To use the LF signal, assign the function to an output terminal by setting "98 (positive logic) or 198 (negative logic)" in any of *Pr.190 to Pr.196 (Output terminal function selection)*.

REMARKS

- Fault output indicates the fault output signal (ALM signal) and an alarm bit output.
- When the fault output setting is active, a fault record is saved in the faults history. (A fault record is written to the faults history at a fault output.)
  When the fault output setting is not active, a fault record is overwritten to the faults history temporarily but not stored.
  After the error is removed, the fault indication goes back to normal indication in the monitor, and the faults history goes back to the previous status.
- If *Pr. 502* is set to "1, 2, or 3," the normal deceleration time setting (settings like *Pr. 8, Pr. 44, and Pr. 45*) is applied as the deceleration time. Normal acceleration time setting (settings like *Pr. 7 and Pr. 44*) is applied as the acceleration time for restart.
- When *Pr.502* = "2 or 3," the inverter operates with the start command and the speed command, which were used before the error.
- If a communication line error occurs, then the error is removed during deceleration while *Pr. 502* = "2," the motor re-accelerates as soon as the error is removed.
- These parameters are valid when communication is performed from the RS-485 terminals or a communication option.
- These parameters are valid under the Network operation mode. When performing communication with RS-485 terminals, set *Pr. 551* PU mode operation command source selection="2 (initial setting)."
- *Pr. 502* is valid for the device that has the command source under the Network operation mode. If a communication option is installed while *Pr. 550* = "9999 (initial setting)," a communication error in RS-485 terminals occurs and *Pr. 502* becomes invalid.
- If the communication error setting is disabled with *Pr. 502* = "3," *Pr. 335* = "9999," and *Pr. 539* = "9999," the inverter does not continue its operation with the frequency set by *Pr. 779* at a communication error.
- If a communication error occurs while continuous operation at *Pr. 779* is selected with *Pr. 502* = "3," the inverter operates at the frequency set in *Pr. 779* even though the speed command source is at the external terminals.
  Example) If a communication error occurs while *Pr. 339* = "2" and the external terminal RL is ON, the operation is continued at the frequency set in *Pr. 779*.

♦ Parameters referred to ♦

Pr. 7 Acceleration time Pr. 8 Deceleration time ☞ *Refer to page 101*
Pr. 335 RS-485 communication retry count ☞ *Refer to page 214*
Pr. 336 RS-485 communication check time interval ☞ *Refer to page 214*
Pr. 539 Modbus-RTU communication check time interval ☞ *Refer to page 232*
Pr. 550 NET mode operation command source selection ☞ *Refer to page 204*
Pr. 551 PU mode operation command source selection ☞ *Refer to page 204*

4.19.6 Mitsubishi inverter protocol (computer link communication)

You can perform parameter setting, monitor, etc. from the PU connector or RS-485 terminals of the inverter using the Mitsubishi inverter protocol (computer link communication).

(1) Communication specifications

· The communication specifications are given below.

Item		Description	Related Parameters
Communication protocol		Mitsubishi protocol (computer link)	Pr. 551
Conforming standard		EIA-485 (RS-485)	—
Number of inverters connected		1:N (maximum 32 units), setting is 0 to 31 stations	Pr. 117 Pr. 331
Communication speed	**PU connector**	Selected among 4800/9600/19200/38400bps	Pr. 118
	RS-485 terminal	Can be selected from 300, 600, 1200, 2400, 4800, 9600, 19200 and 38400bps	Pr. 332
Control protocol		Asynchronous system	—
Communication method		Half-duplex system	—
Communication specifications	**Character system**	ASCII (7 bits or 8 bits can be selected)	Pr. 119 Pr. 333
	Start bit	1bit	—
	Stop bit length	1 bit or 2 bits can be selected	Pr. 119 Pr. 333
	Parity check	Check (with even or odd parity) or no check can be selected	Pr. 120 Pr. 334
	Error check	Sum code check	—
	Terminator	CR/LF (presence or absence can be selected)	Pr. 124 Pr. 341
Waiting time setting		Selectable between presence and absence	Pr. 123 Pr. 337

(2) Communication procedure

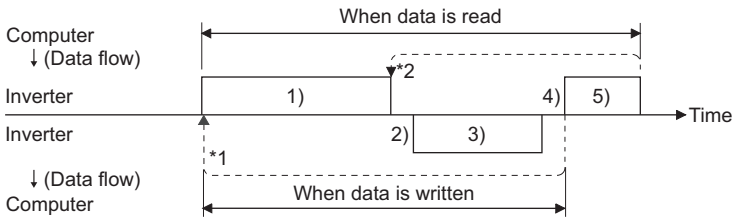

· Data communication between the computer and inverter is made in the following procedure.

1) Request data is sent from the computer to the inverter. (The inverter will not send data unless requested.)
2) After waiting for the waiting time
3) The inverter sends reply data to the computer in response to the computer request.
4) After having waited for the time taken for inverter processing
5) Answer from computer in response to reply data 3) is sent. (Even if 5) is not sent, subsequent communication is made property.)

*1 If a data error is detected and a retry must be made, execute retry operation with the user program. The inverter comes to trip if the number of consecutive retries exceeds the parameter setting.

*2 On receipt of a data error occurrence, the inverter returns "reply data 3)" to the computer again. The inverter comes to trip if the number of consecutive data errors reaches or exceeds the parameter setting.

(3) Communication operation presence/absence and data format types

- Data communication between the computer and inverter is made in ASCII code (hexadecimal code).
- Communication operation presence/absence and data format types are as follows:

Symbol	Operation		Run Command	Running Frequency	Multi command	Parameter Write	Inverter Reset	Monitor	Parameter Read
1)	Communication request is sent to the inverter in accordance with the user program in the computer.		A, A1	A	A2	A	A	B	B
2)	Inverter data processing time		Present	Present	Present	Present	Absent	Present	Present
3)	Reply data from the inverter (Data 1) is checked for error)	No error *1 (Request accepted)	C	C	C1 *3	C	C *2	E, E1, E2, E3	E
		With error. (Request rejected)	D	D	D	D	D *2	D	D
4)	Computer processing delay time		10ms or more						
5)	Answer from computer in response to reply data 3) (Data 3) is checked for error)	No error *1 (No inverter processing)	Absent	Absent	Absent (C)	Absent	Absent	Absent (C)	Absent (C)
		With error (Inverter re-outputs 3))	Absent	Absent	F	Absent	Absent	F	F

*1 In the communication request data from the computer to the inverter, 10ms or more is also required after "no data error (ACK)". *(Refer to page 222)*
*2 The inverter response to the inverter reset request can be selected. *(Refer to page 227)*
*3 At mode error, and data range error, C1 data contains an error code. *(Refer to page 231)* Except for those errors, the error is returned with data format D.

•Data writing format

Communication request data from the computer to the inverter 1)

Format	Number of Characters																		
	1	2	3	4	5	6	7	8	9	10	11	12	13	14	15	16	17	18	19
A	ENQ *1	Inverter station number *2		Instruction code		*3	Data				Sum check		*4						
A1	ENQ *1	Inverter station number *2		Instruction code		*3	Data		Sum check		*4								
A2	ENQ *1	Inverter station number *2		Instruction code		*3	Send data type	Receive data type	Data1				Data2				Sum check		*4

Reply data from the inverter to the computer 3) (No data error detected)

Format	Number of Characters																		
	1	2	3	4	5	6	7	8	9	10	11	12	13	14	15	16	17	18	19
C	ACK *1	Inverter station number *2		*4															
C1	STX *1	Inverter station number *2		Send data type	Receive data type	Error code 1	Error code 2	Data1				Data2				ETX *1	Sum check		*4

Reply data from the inverter to the computer 3) (With data error)

Format	Number of Characters				
	1	2	3	4	5
D	NAK *1	Inverter station number *2		Error code	*4

*1 Indicate a control code
*2 Specify the inverter station numbers between H00 and H1F (stations 0 to 31) in hexadecimal.
*3 When *Pr.123* and *Pr.337* (Waiting time setting) ≠ 9999, create a communication request data without "waiting time" in the data format. (The number of characters decreases by 1.)
*4 CR, LF code
When data is transmitted from the computer to the inverter, codes CR (carriage return) and LF (line feed) are automatically set at the end of a data group on some computers. In this case, setting must also be made on the inverter according to the computer. Whether the CR and LF codes will be present or absent can be selected using *Pr. 124 PU communication CR/LF selection*.

•Data reading format

Communication request data from the computer to the inverter 1)

Format	Number of Characters								
	1	2	3	4	5	6	7	8	9
B	ENQ *1	Inverter station number *2		Instruction code		*3	Sum check		*4

Reply data from the inverter to the computer 3) (No data error detected)

Format	Number of Characters												
	1	2	3	4	5	6	7	8	9	10	11	12	13
E	STX *1	Inverter station number *2		Read data				ETX *1	Sum check		*4		
E1	STX *1	Inverter station number *2		Read data		ETX *1	Sum check		*4				
E2	STX *1	Inverter station number *2		Read data						ETX *1	Sum check		*4

Format	Number of Characters							
	1	2	3	4 to 23	24	25	26	27
E3	STX *1	Inverter station number *2		Read data (Inverter model information)	ETX *1	Sum check		*4

Reply data from the inverter to the computer 3) (With data error)

Format	Number of Characters				
	1	2	3	4	5
D	NAK *1	Inverter station number *2		Error code	*4

Send data from the computer to the inverter 5)

Format	Number of Characters			
	1	2	3	4
C (Without data error)	ACK *1	Inverter station number *2		*4
F (With data error)	NAK *1	Inverter station number *2		*4

*1 Indicate a control code

*2 Specify the inverter station numbers between H00 and H1F (stations 0 to 31) in hexadecimal.

*3 When *Pr.123* and *Pr.337* (Waiting time setting) ≠ 9999, create a communication request data without "waiting time" in the data format. (The number of characters decreases by 1.)

*4 CR, LF code
When data is transmitted from the computer to the inverter, codes CR (carriage return) and LF (line feed) are automatically set at the end of a data group on some computers. In this case, setting must also be made on the inverter according to the computer. Whether the CR and LF codes will be present or absent can be selected using *Pr. 124 PU communication CR/LF selection*.

(4) Data definitions

1) Control codes

Signal Name	ASCII Code	Description
STX	H02	Start Of Text (start of data)
ETX	H03	End Of Text (end of data)
ENQ	H05	Enquiry (communication request)
ACK	H06	Acknowledge (no data error detected)
LF	H0A	Line Feed
CR	H0D	Carriage Return
NAK	H15	Negative Acknowledge (data error detected)

2) Inverter station number
Specify the station number of the inverter which communicates with the computer.

3) Instruction code
Specify the processing request, e.g. operation or monitoring, given by the computer to the inverter. Hence, the inverter can be run and monitored in various ways by specifying the instruction code as appropriate. *(Refer to page 62)*

4) Data
Indicates the data such as frequency and parameters transferred to and from the inverter. The definitions and ranges of set data are determined in accordance with the instruction codes. *(Refer to page 62)*

5) Waiting time
Specify the waiting time between the receipt of data at the inverter from the computer and the transmission of reply data. Set the waiting time in accordance with the response time of the computer between 0 and 150ms in 10ms increments (e.g. 1 = 10ms, 2 = 20ms).

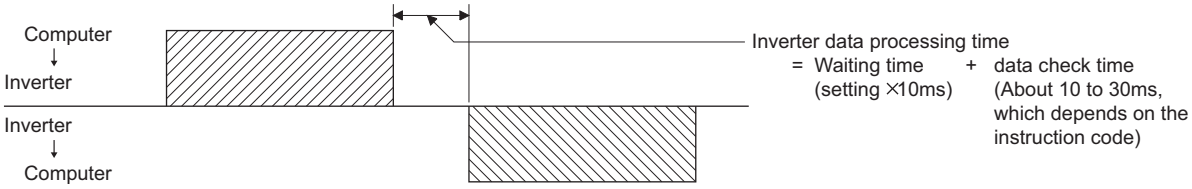

REMARKS

- When *Pr. 123, Pr. 337 (waiting time setting)* ≠ "9999", create the communication request data without "waiting time" in the data format. (The number of characters decreases by 1.)
- The data check time changes depending on the instruction code. *(Refer to page 223)*

6) Sum check code
The sum check code is 2-digit ASCII (hexadecimal) representing the lower 1 byte (8 bits) of the sum (binary) derived from the checked ASCII data

(Example 1)
Computer→ Inverter

	ENQ	Station number		Instruction code		*Waiting time	Data				Sum check code		
		0	1	E	1	1	0	7	A	D	F	4	←Binary code
ASCII Code →	H05	H30	H31	H45	H31	H31	H30	H37	H41	H44	H46	H34	

H30+H31+H45+H31+H31+H30+H37+H41+H44

=H1F4
Sum

* When the Pr. 123 "waiting time setting"≠"9999", create the communication request data without "waiting time" in the data format. (The number of characters decreases by 1.)

(Example 2)
Inverter → Computer

	STX	Station number		Data read				ETX	Sum check code		
		0	1	1	7	7	0		3	0	←Binary code
ASCII Code →	H02	H30	H31	H31	H37	H37	H30	H03	H33	H30	

H30+H31+H31+H37+H37+H30

= H130
Sum

7) Error Code

If any error is found in the data received by the inverter, its definition is sent back to the computer together with the NAK code.

Error Code	Error Item	Error Definition	Inverter Operation
H0	Computer NAK error	The number of errors consecutively detected in communication request data from the computer is greater than allowed number of retries.	Brought to trip if error occurs continuously more than the allowable number of retries. (E.PUE/E.SER)
H1	Parity error	The parity check result does not match the specified parity.	
H2	Sum check error	The sum check code in the computer does not match that of the data received by the inverter.	
H3	Protocol error	The data received by the inverter has a grammatical mistake. Alternatively, data receive is not completed within the predetermined time. CR or LF is not as set in the parameter.	
H4	Framing error	The stop bit length differs from the initial setting.	
H5	Overrun error	New data has been sent by the computer before the inverter completes receiving the preceding data.	
H6	—	—	—
H7	Character error	The character received is invalid (other than 0 to 9, A to F, control code).	Does not accept received data but is not brought to trip.
H8	—	—	—
H9	—	—	—
HA	Mode error	Parameter write was attempted in other than the computer link operation mode, when operation command source is not selected or during inverter operation.	Does not accept received data but is not brought to trip.
HB	Instruction code error	The specified command does not exist.	
HC	Data range error	Invalid data has been specified for parameter write, frequency setting, etc.	
HD	—	—	—
HE	—	—	—
HF	—	—	—

(5) Response time

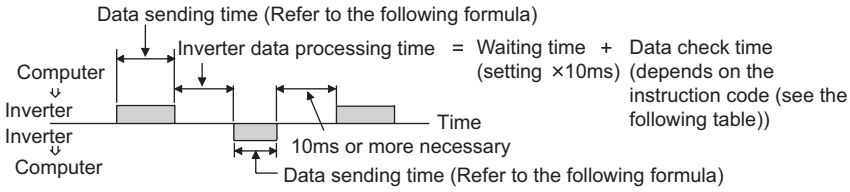

[Formula for data sending time]

$$\frac{1}{\text{Communication speed (bps)}} \times \text{Number of data characters} \times \text{Communication specifications (total number of bits)} = \text{Data send time (s)}$$

(Refer to page 220) (See below.)

●Communication specifications

Name		Number of Bits
Stop bit length		1 bit 2 bits
Data length		7 bits 8 bits
Parity check	Yes	1 bit
	No	0

In addition to the above, 1 start bit is necessary.
Minimum number of total bits..... 9 bits
Maximum number of total bits..... 12 bits

●Data check time

Item	Check Time
Various monitors, run command, frequency setting (RAM)	<12ms
Parameter read/write, frequency setting (EEPROM)	<30ms
Parameter clear/all clear	<5s
Reset command	No answer

(6) Retry count setting (*Pr. 121, Pr. 335*)

- Set the permissible number of retries at occurrence of a data receive error. (*Refer to page 223* for data receive error for retry)
- When data receive errors occur consecutively and exceed the permissible number of retries set, an inverter trip (E.PUE) may occur and stops the motor.
- When "9999" is set, an inverter will not trip even if data receive error occurs but an alarm output signal (LF) is output. For the terminal used for the LF signal output, assign the function by setting "98 (positive logic) or 198 (negative logic)" in any of *Pr. 190 to Pr. 196 (output terminal function selection)*.

Example: PU connector communication, *Pr. 121* = "1" (initial value)

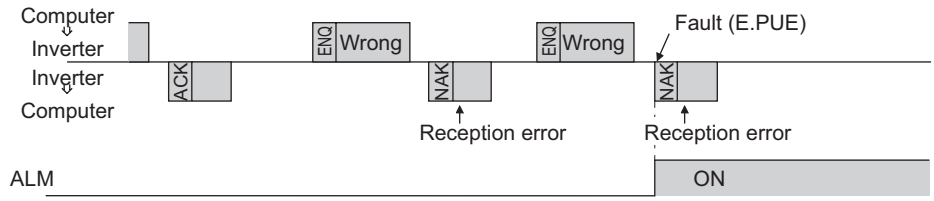

Example: PU connector communication, *Pr. 121* = "9999"

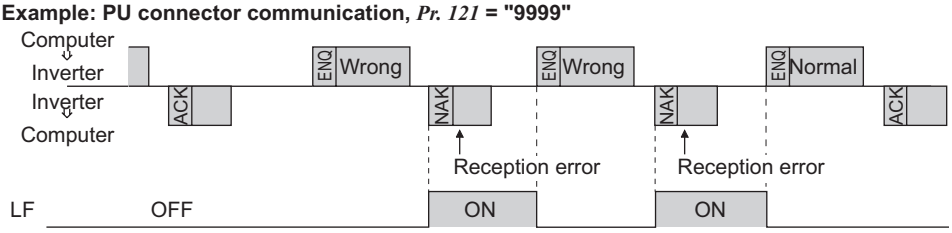

REMARKS

When using RS-485 terminal communication, inverter behavior at fault occurrence varies depending on *Pr. 502 Stop mode selection at communication error* setting. *(Refer to page 216)*

(7) Signal loss detection *(Pr. 122, Pr. 336 RS-485 communication check time interval)*

- If a signal loss (communication stop) is detected between the inverter and computer as a result of signal loss detection, a communication fault (PU connector communication: E.PUE, RS-485 terminal communication: E.SER) occurs and the inverter trips.
- Signal loss detection is made when the setting is any of "0.1s" to "999.8s". To make a signal loss detection, it is necessary to send data (control code *refer to page 222*) from the computer within the communication check time interval. (The send data has nothing to do with the station number)
- Communication check is started at the first communication in the operation mode having the command source (PU operation mode for PU connector communication in the initial setting or Network operation mode for RS-485 terminal communication).
- When the setting is "9999", communication check (a signal loss detection) is not made.
- When the setting is "0", communication from the PU connector cannot be performed. For communication via the RS-485 terminals, monitor, parameter read, etc. can be performed, but a communication error (E.SER) occurs as soon as the inverter is switched to Network operation mode.

Example: PU connector communication, *Pr. 122* = "0.1 to 999.8s"

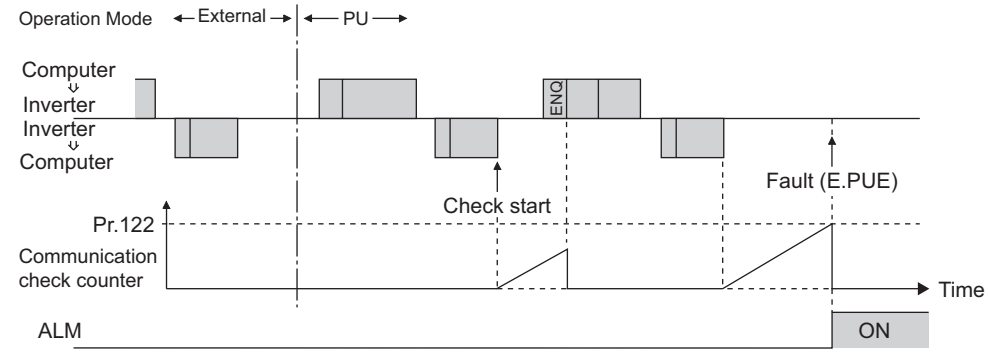

REMARKS

When using RS-485 terminal communication, inverter behavior at fault occurrence varies depending on *Pr. 502 Stop mode selection at communication error* setting. *(Refer to page 216)*

(8) Instructions for the program

1) When data from the computer has any error, the inverter does not accept that data. Hence, in the user program, always insert a retry program for data error.
2) All data communication, e.g. run command or monitoring, are started when the computer gives a communication request. The inverter does not return any data without the computer's request. Hence, design the program so that the computer gives a data read request for monitoring, etc. as required.
3) Program example
   To change the operation mode to computer link operation

Programming example of Microsoft® Visual C++® (Ver.6.0)

```
#include <stdio.h>
#include <windows.h>

void main(void){
        HANDLE          hCom;           // Communication handle
        DCB             hDcb;           // Structure for communication setting
        COMMTIMEOUTS            hTim;   // Structure for time out setting

        char            szTx[0x10];             // Send buffer
        char            szRx[0x10];             // Receive buffer
        char            szCommand[0x10];// Command
        int             nTx,nRx;                // For buffer size storing
        int             nSum;                   // For sum code calculation
        BOOL            bRet;
        int             nRet;
        int             i;

        //**** Opens COM1 port****
        hCom = CreateFile ("COM1", (GENERIC_READ | GENERIC_WRITE), 0, NULL, OPEN_EXISTING, FILE_ATTRIBUTE_NORMAL, NULL);
        if (hCom != NULL) {
                //**** Makes a communication setting of COM1 port****
                GetCommState(hCom,&hDcb);                       // Retrieves current communication information
                hDcb.DCBlength = sizeof(DCB);                   // Structure size setting
                hDcb.BaudRate  = 19200;                         // Communication speed=09200bps
                hDcb.ByteSize  = 8;                             // Data length=8bit
                hDcb.Parity    = 2;                             // Even parity
                hDcb.StopBits  = 2;                             // Stop bit=2bit
                bRet = SetCommState(hCom,&hDcb);                // Sets the changed communication data
                if (bRet == TRUE) {
                        //**** Makes a time out setting of COM1 port****
                        Get CommTimeouts(hCom,&hTim);           // Obtains the current time out value
                        hTim.WriteTotalTimeoutConstant = 1000;  // Write time out 1s
                        hTim.ReadTotalTimeoutConstant  = 1000;  // Read time out 1s
                        SetCommTimeouts(hCom,&hTim);            // Changed time out value setting
                        //**** Sets the command to switch the operation mode of the station 1 inverter to the network operation mode ****
                        sprintf(szCommand,"01FB10000");         // Send data (NET operation write)
                        nTx = strlen(szCommand);                //Send data size
                        //**** Generates sum code****
                        nSum = 0;                               // Initialization of sum data
                        for (i = 0;i < nTx;i++) {
                                nSum += szCommand[i];           // Calculates sum code
                                nSum &= (0xff);                 // Masks data
                        }

                        //**** Generates send data****
                        memset(szTx,0,sizeof(szTx));            // Initialization of send buffer
                        memset(szRx,0,sizeof(szRx));            // Initialization of receive buffer
                        sprintf(szTx,"\5%s%02X",szCommand,nSum);// ENQ code+send data+sum code
                        nTx = 1 + nTx + 2;                      // Number of ENQ code+number of send data+number of sum code

                        nRet = WriteFile(hCom,szTx,nTx,&nTx,NULL);
                        //**** Sending ****
                        if(nRet != 0) {
                                nRet = ReadFile(hCom,szRx,sizeof(szRx),&nRx,NULL);
                        //**** Receiving ****
                                if(nRet != 0) {
                                        //**** Displays the receive data ****
                                        for(i = 0;i < nRx;i++) {
                                                printf("%02X ",(BYTE)szRx[i]);// Consol output of receive data
                                                // Displays ASCII coder in hexadecimal. Displays 30 when "0"
                                        }
                                        printf("\n\r");
                                }
                        }
                }
                CloseHandle(hCom);                              // Close communication port
        }
}
```

General flowchart

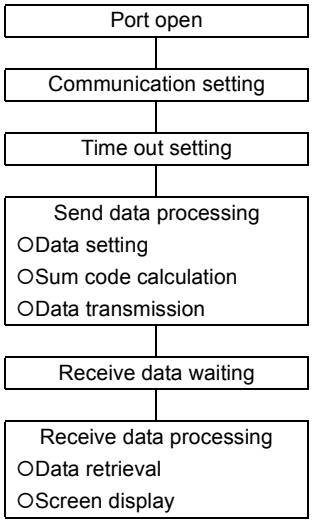

⚠ CAUTION

⚠ Always set the communication check time interval before starting operation to prevent hazardous conditions.

⚠ Data communication is not started automatically but is made only once when the computer provides a communication request. If communication is disabled during operation due to signal loss etc., the inverter cannot be stopped. When the communication check time interval has elapsed, the inverter will come to trip (E.PUE, E.SER). The inverter can be coasted to a stop by switching ON its RES signal or by switching power OFF.

⚠ If communication is broken due to signal loss, computer fault etc., the inverter does not detect such a fault. This should be fully noted.

(9) Setting items and set data

After completion of parameter setting, set the instruction codes and data then start communication from the computer to allow various types of operation control and monitoring.

No.	Item		Read /write	Instruction Code	Data Description	Number of Data Digits (format)
1	Operation Mode		Read	H7B	H0000: Network operation H0001: External operation H0002: PU operation (RS-485 communication operation via PU connector)	4 digits (B,E/D)
			Write	HFB		4 digits (A,C/D)
2	Monitor	Output frequency/ speed	Read	H6F	H0000 to HFFFF: Output frequency in 0.01Hz increments Speed in 1r/min increments (when *Pr. 37* = 1 to 9998 or *Pr. 144* = 2 to 10, 102 to 110)	4 digits (B,E/D)
		Output current	Read	H70	H0000 to HFFFF: Output current (hexadecimal) in 0.01A increments (FR-F720-02330(FR-F740-01160) or less) / 0.1A increments (FR-F720-03160(FR-F740-01800) or more)	4 digits (B,E/D)
		Output voltage	Read	H71	H0000 to HFFFF: Output voltage (hexadecimal) in 0.1V increments	4 digits (B,E1/D)
		Special monitor	Read	H72	H0000 to HFFFF: Monitor data selected in instruction code HF3	4 digits (B,E/D)
		Special monitor selection No.	Read	H73	H01 to H4A: Monitor selection data Refer to the special monitor No. table *(page 229)*	2digits (B,E1/D)
			Write	HF3		2digits (A1,C/D)
		Fault definition	Read	H74 to H77	H0000 to HFFFF: Two most recent fault records 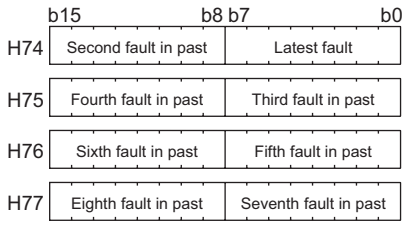 Refer to the fault data table *(page 230)*	4 digits (B,E/D)
3	Run command (extended)		Write	HF9	You can set the control input commands such as the forward rotation signal (STF) and reverse rotation signal (STR). (*Refer to page 230* for details)	4 digits (A,C/D)
	Run command		Write	HFA		2digits (A1,C/D)
4	Inverter status monitor (extended)		Read	H79	You can monitor the states of the output signals such as forward rotation, reverse rotation and inverter running (RUN). (*Refer to page 231* for details)	4 digits (B,E/D)
	Inverter status monitor		Read	H7A		2digits (B,E1/D)
5	Set frequency (RAM)		Read	H6D	Read the set frequency/speed from the RAM or EEPROM. H0000 to HFFFF: Set frequency in 0.01Hz increments Speed in 1r/min increments (When *Pr. 37* = 1 to 9998 or *Pr. 144* = 2 to 10, 102 to 110)	4 digits (B,E/D)
	Set frequency (EEPROM)			H6E		
	Set frequency (RAM)		Write	HED	Write the set frequency/speed into the RAM or EEPROM. H0000 to H9C40 (0 to 400.00Hz) : frequency in 0.01Hz increments H0000 to H270E (0 to 9998) : speed in r/min increments (when *Pr. 37* = 1 to 9998 or *Pr. 144* = 2 to 10, 102 to 110) · To change the running frequency consecutively, write data to the inverter RAM. (Instruction code: HED)	4 digits (A,C/D)
	Set frequency (RAM, EEPROM)			HEE		
6	Inverter reset		Write	HFD	H9696: Inverter reset · As the inverter is reset at start of communication by the computer, the inverter cannot send reply data back to the computer.	4 digits (A,C/D)
					H9966: Inverter reset · When data is sent normally, ACK is returned to the computer and then the inverter is reset.	4 digits (A,D)

Refer to page 220 for data formats (A, A1, A2, B, C, C1, D, E, E1, E2, E3, F)

No.	Item	Read /write	Instruction Code	Data Description	Number of Data Digits (format)
7	Faults history batch clear	Write	HF4	H9696: clears the faults history in batch	4 digits (A,C/D)
8	Parameter clear All parameter clear Ver.UP	Write	HFC	All parameters return to the initial values. Whether to clear communication parameters or not can be selected according to data. (○: clear, ×: not clear) *Refer to page 390* for parameter clear, all clear, and communication parameters. Clear type / Data / Communication parameters Parameter clear: H9696 ○; H5A5A × All parameter clear: H9966 ○; H55AA × When clear is executed for H9696 or H9966, communication-related parameter settings also return to the initial values. When resuming operation, set the parameters again. Executing clear will clear the instruction code HEC, HF3, and HFF settings. Only H9966 and H55AA (all parameter clear) are valid during the password lock.	4 digits (A,C/D)
9	Parameters	Read	H00 to H63	Refer to the instruction code *(page 390)* and write and/or read the values as required. When setting *Pr.100* and later, link parameter expansion setting must be set.	4 digits (B,E/D)
10		Write	H80 to HE3		4 digits (A,C/D)
11	Link parameter extended setting	Read	H7F	Parameter description is changed according to the H00 to H09 setting. For details of the setting, refer to the instruction code *(page 390)*.	2digits (B,E1/D)
		Write	HFF		2digits (A1,C/D)
12	Second parameter changing (instruction code HFF=1)	Read	H6C	When setting the calibration parameters *1 H00:Frequency *2 H01: Parameter-set analog value H02: Analog value input from terminal *1 Refer to the list of calibration parameters on the next page for calibration parameters. *2 The gain frequency can also be written using *Pr. 125* (instruction code H99) or *Pr. 126* (instruction code H9A).	2digits (B,E1/D)
		Write	HEC		2digits (A1,C/D)
13	Multi command Ver.UP	Write/ Read	HF0	Available for writing 2 commands, and monitoring 2 items for reading data (*Refer to page 231* for detail)	10 digits (A2,C1/D)
14	Inverter type monitor: Inverter type Ver.UP	Read	H7C	Reading inverter type in ASCII code. "H20" (blank code) is set for blank area Example of FR-F720 H46, H52, H2D, H46, H37, H32, H30, H20.. H20	20 digits (B,E3/D)
	Inverter type monitor: Capacity Ver.UP	Read	H7D	Reading inverter capacity in ASCII code. Data is read in increments of 0.1kW, and rounds down to 0.01kW increments "H20" (blank code) is set for blank area Example 0.75K....." 7" (H20, H20, H20, H20, H20, H37)	6 digits (B,E2/D)

Refer to page 220 for data formats (A, A1, A2, B, C, C1, D, E, E1, E2, E3, F)

Ver.UP .... Specifications differ according to the date assembled. *Refer to page 400* to check the SERIAL number.

REMARKS

- Set 65520 (HFFF0) as a parameter value "8888" and 65535 (HFFFF) as "9999".
- For the instruction codes HFF, HEC and HF3, their values are held once written but cleared to zero when an inverter reset or all clear is performed.

Example) When reading the *C3 (Pr. 902) and C6 (Pr. 904)* settings from the inverter of station No. 0

	Computer Send Data	Inverter Send Data	Description
1)	ENQ 00 FF 0 01 82	ACK 00	Set "H01" in the extended link parameter.
2)	ENQ 00 EC 0 01 7E	ACK 00	Set "H01" in second parameter changing.
3)	ENQ 00 5E 0 0F	STX 00 0000 ETX 25	*C3 (Pr. 902)* is read. 0% is read.
4)	ENQ 00 60 0 FB	STX 00 0000 ETX 25	*C6 (Pr. 904)* is read. 0% is read.

To read/write *C3 (Pr. 902)* and *C6 (Pr. 904)* after inverter reset or parameter clear, execute from 1) again.

●List of calibration parameters

Parameter	Name	Instruction code		
		Read	Write	Extended
C2 (902)	Terminal 2 frequency setting bias frequency	5E	DE	1
C3 (902)	Terminal 2 frequency setting bias	5E	DE	1
125 (903)	Terminal 2 frequency setting gain frequency	5F	DF	1
C4 (903)	Terminal 2 frequency setting gain	5F	DF	1
C5 (904)	Terminal 4 frequency setting bias frequency	60	E0	1
C6 (904)	Terminal 4 frequency setting bias	60	E0	1
126 (905)	Terminal 4 frequency setting gain frequency	61	E1	1
C7 (905)	Terminal 4 frequency setting gain	61	E1	1

Parameter	Name	Instruction code		
		Read	Write	Extended
C8 (930)	Current output bias signal	1E	9E	9
C9 (930)	Current output bias current	1E	9E	9
C10 (931)	Current output gain signal	1F	9F	9
C11 (931)	Current output gain current	1F	9F	9
C42 (934)	PID display bias coefficient	22	A2	9
C43 (934)	PID display bias analog value	22	A2	9
C44 (935)	PID display gain coefficient	23	A3	9
C45 (935)	PID display gain analog value	23	A3	9

[Special monitor selection No.]

Refer to page 141 for details of the monitor description.

Data	Description	Unit
H01	Output frequency/speed *4	0.01Hz/1
H02	Output current	0.01A/0.1A *1
H03	Output voltage	0.1V
H05	Frequency setting value/speed setting *4	0.01Hz/1
H06	Running speed	1r/min
H08	Converter output voltage	0.1V
H09	Regenerative brake duty	0.1%
H0A	Electronic thermal relay function load factor	0.1%
H0B	Output current peak value	0.01A/0.1A *1
H0C	Converter output voltage peak value	0.1V
H0D	Input power	0.01kW/0.1kW *1
H0E	Output power	0.01kW/0.1kW *1
H0F	Input terminal status *2	—
H10	Output terminal status *3	—
H11	Load meter	0.1%
H14	Cumulative energization time	1h
H17	Actual operation time	1h
H18	Motor load factor	0.1%

Data	Description	Unit
H19	Cumulative power	1kWh
H32	Power saving effect	Variable
H33	Cumulative saving power	Variable
H34	PID set point	0.1%
H35	PID measured value	0.1%
H36	PID deviation	0.1%
H3A	Option input terminal status 1 Ver.UP *5	—
H3B	Option input terminal status 2 Ver.UP *6	—
H3C	Option output terminal status Ver.UP *7	—
H4D	32-bit cumulative power (lower 16-bit) Ver.UP	1kWh
H4E	32-bit cumulative power (upper 16-bit) Ver.UP	1kWh
H4F	32-bit cumulative power (lower 16-bit) Ver.UP	0.01kWh/ 0.1kWh *1
H50	32-bit cumulative power (upper 16-bit) Ver.UP	0.01kWh/ 0.1kWh *1

Ver.UP ….Specifications differ according to the date assembled. *Refer to page 400* to check the SERIAL number.

*1 The setting depends on capacities. (FR-F720-02330 (FR-F740-01160) or less/FR-F720-03160 (FR-F740-01800) or more)

*2 Input terminal monitor details

b15															b0
—	—	—	—	CS	RES	STOP	MRS	JOG	RH	RM	RL	RT	AU	STR	STF

*3 Output terminal monitor details

b15															b0
—	—	—	—	—	—	—	—	—	ABC2	ABC1	FU	OL	IPF	SU	RUN

*4 When *Pr.37* = "1 to 9998" or *Pr. 144* = "2 to 10, 102 to 110," the unit is an integral value (one increment). *(Refer to page 139)*

*5 Option input terminal 1 monitor details (input terminal status of FR-A7AX)-all terminals are OFF when an option is not fitted

b15															b0
X15	X14	X13	X12	X11	X10	X9	X8	X7	X6	X5	X4	X3	X2	X1	X0

*6 Option input terminal 2 monitor details (input terminal status of FR-A7AX)-all terminals are OFF when an option is not fitted

b15															b0
—	—	—	—	—	—	—	—	—	—	—	—	—	—	—	DY

*7 Option output terminal monitor details (output terminal status of FR-A7AY)-all terminals are OFF when an option is not fitted

b15															b0
—	—	—	—	—	—	RA3	RA2	RA1	Y6	Y5	Y4	Y3	Y2	Y1	Y0

[Fault data]

Refer to page 333 for details of fault description.

Data	Description	Data	Description	Data	Description	Data	Description
H00	No fault	H51	UVT	HB0	PE	HE4	LCI
H10	OC1	H52	ILF	HB1	PUE	HE5	PCH
H11	OC2	H60	OLT	HB2	RET	HE6	PID
H12	OC3	H70	BE	HB3	PE2	HF1	E.1
H20	OV1	H80	GF	HC0	CPU	HF2	E.2
H21	OV2	H81	LF	HC1	CTE	HF5	E.5
H22	OV3	H90	OHT	HC2	P24	HF6	E.6
H30	THT	H91	PTC	HC4	CDO	HF7	E.7
H31	THM	HA0	OPT	HC5	IOH	HFD	E.13
H40	FIN	HA1	OP1	HC6	SER		
H50	IPF	HA2	OP2	HC7	AIE		

Fault record display example
(instruction code H74)

For read data H30A0
(Previous fault ..... THT)
(Latest fault ..... OPT)

b15							b8	b7							b0
0	0	1	1	0	0	0	0	1	0	1	0	0	0	0	0

Previous fault (H30) — Latest fault (HA0)

[Run command]

Item	Instruction Code	Bit Length	Description	Example
Run command	HFA	8bit	b0: AU (current input selection) *1 *3 b1: Forward rotation command b2: Reverse rotation command b3: RL (low speed operation command) *1 *3 b4: RM (middle speed operation command) *1 *3 b5: RH (high speed operation command) *1 *3 b6: RT (second function selection) *1 *3 b7: MRS (output stop) *1 *3	[Example 1] H02 Forward rotation b7 … b0 0 0 0 0 0 0 1 0 [Example 2] H00 Stop b7 … b0 0 0 0 0 0 0 0 0
Run command (extended)	HF9	16bit	b0:AU (current input selection) *1 *3 b1:Forward rotation command b2:Reverse rotation command b3:RL (low speed operation command) *1 *3 b4:RM (middle speed operation command) *1 *3 b5: RH (high speed operation command) *1 *3 b6:RT (second function selection) *1 *3 b7:MRS (output stop) *1 *3 b8:JOG (Jog operation) *2 *3 b9:CS (selection of automatic restart after instantaneous power failure) *2 *3 b10: STOP (start self-holding) *2 *3 b11:RES (reset) *2 *3 b12:— b13:— b14:— b15:—	[Example 1] H0002 Forward rotation b15 … b0 0 0 0 0 0 0 0 0 0 0 0 0 0 0 1 0 [Example 2] H0800 low speed operation (When Pr. 189 RES terminal function selection is set to "0") b15 … b0 0 0 0 0 1 0 0 0 0 0 0 0 0 0 0 0

*1 The signal within parentheses is the initial setting. The description changes depending on the setting of *Pr. 180 to Pr. 184, Pr. 187 (input terminal function selection) (page 122)*.

*2 The signal within parentheses is the initial setting. Since Jog operation/selection of automatic restart after instantaneous power failure/start self-holding/reset cannot be controlled by the network, bit 8 to bit 11 are invalid in the initial status. When using bit 8 to bit 11, change the signals with *Pr. 185, Pr. 186, Pr. 188, Pr. 189 (input terminal function selection) (page 128)*. (Reset can be executed with the instruction code HFD.)

*3 Only forward rotation command and reverse rotation command are available for RS-485 communication using PU connector.

[Inverter status monitor]

Item	Instruction Code	Bit Length	Description	Example
Inverter status monitor	H7A	8bit	b0:RUN (inverter running)* b1:Forward rotation b2:Reverse rotation b3:SU (up to frequency) * b4:OL (overload) * b5:IPF (instantaneous power failure) * b6:FU (frequency detection)* b7:ABC1 (fault) *	[Example 1] H02 ··· During forward rotation b7 b0 0 0 0 0 0 0 1 0 [Example 2] H80 ··· Stop at fault occurrence b7 b0 1 0 0 0 0 0 0 0
Inverter status monitor (extended)	H79	16bit	b0:RUN (inverter running) * b1:Forward rotation b2:Reverse rotation b3:SU (up to frequency) * b4:OL (overload) * b5:IPF (instantaneous power failure) * b6:FU (frequency detection) * b7:ABC1 (fault) * b8:ABC2 (—)* b9:— b10:— b11:— b12:— b13:— b14:— b15: Fault occurrence	[Example 1] H0002 ···During forward rotation b15 b0 0 0 0 0 0 0 0 0 0 0 0 0 0 0 1 0 [Example 2] H8080 ···Stop at fault occurrence b15 b0 1 0 0 0 0 0 0 0 1 0 0 0 0 0 0 0

* The signal within parentheses is the initial setting. The description changes depending on the setting of *Pr. 190 to Pr. 196 (output terminal function selection)*.

[Multi command (HF0)]

Sending data format from computer to inverter

Format	Number of Characters																		
	1	2	3	4	5	6	7	8	9	10	11	12	13	14	15	16	17	18	19
A2	ENQ	Inverter station number		Instruction Code (HF0)		Waiting time	Send data type *1	Receive data type *2	Data1 *3				Data2 *3				Sum check		CR/LF

Reply data format from inverter to computer (No data error detected)

Format	Number of Characters																		
	1	2	3	4	5	6	7	8	9	10	11	12	13	14	15	16	17	18	19
C1	STX	Inverter station number		Send data type *1	Receive data type *2	Error code 1 *5	Error code 2 *5	Data1 *4				Data2 *4				ETX	Sum check		CR/LF

*1 Specify the data type of sending data (from computer to inverter).
*2 Specify the data type of reply data (from inverter to computer).
*3 Combination of data 1 and data 2 for sending

Data Type	Data 1	Data 2	Remarks
0	Run command (expansion)	Set frequency (RAM)	Run command (expansion) is same as instruction code HF9 (*Refer to page 230*)
1	Run command (expansion)	Set frequency (RAM, EEPROM)	

*4 Combination of data 1 and data 2 for reply

Data Type	Data 1	Data 2	Remarks
0	Inverter status monitor (expansion)	Output frequency (speed)	Inverter status monitor (expansion) is same as instruction code H79 (*Refer to page 230*) Replies the monitor item specified in instruction code HF3 for special monitor. (*Refer to page 229*)
1	Inverter status monitor (expansion)	Special monitor	

*5 Error code for sending data 1 is set in error code 1, and error code for sending data 2 is set in error code 2.
Mode error (HA), instruction code error (HB), data range error (HC) or no error (HF) is replied.

4.19.7 Modbus-RTU communication specifications (Pr. 331, Pr. 332, Pr. 334, Pr. 343, Pr. 502, Pr. 539, Pr. 549, Pr.779)

Using the Modbus-RTU communication protocol, communication operation or parameter setting can be performed from the RS-485 terminals of the inverter.

Parameter Number	Name	Initial Value	Setting Range	Description
331	RS-485 communication station number	0	0	Broadcast communication is selected.
			1 to 247 *	Specifies the inverter station number. Set the inverter station numbers when two or more inverters are connected to one personal computer.
332	RS-485 communication speed	96	3, 6, 12, 24, 48, 96, 192, 384 *	Set the communication speed. The setting value × 100 equals the communication speed. For example, the communication speed is 9600bps when the setting value is "96".
334	RS-485 communication parity check selection	2	0	Without parity check Stop bit length 2bits
			1	With odd parity check Stop bit length 1bit
			2	With even parity check Stop bit length 1bit
343	Communication error count	0	—	Displays the number of communication errors during Modbus-RTU communication. Reading only

502 Ver.UP	Stop mode selection at communication error	0		At Fault Occurrence	Indication	Fault Output	At Fault Removal
			0	Coasts to stop.	E.SER	Output	Stop (E.SER)
			1	Decelerates to stop	After stop E.SER	Output after stop	Stop (E.SER)
			2	Decelerates to stop	After stop E.SER	Without output	Automatic restart functions
			3	Continues running at *Pr.779*	—	Without output	Operates in normal condition

539	Modbus-RTU communication check time interval	9999	0	Modbus-RTU communication is available, but the inverter trips in the NET operation mode.
			0.1 to 999.8s	Set the interval of communication check time. (same specifications as *Pr. 122*)
			9999	No communication check (signal loss detection)
549 Ver.UP	Protocol selection	1	0	Mitsubishi inverter (computer link) protocol
			1	Modbus-RTU protocol
			2	BACnet MS/TP protocol
779 Ver.UP	Operation frequency during communication error	9999	0 to 400Hz	Motor runs at the specified frequency at a communication error.
			9999	Motor runs at the frequency used before the communication error.

The above parameters can be set when *Pr. 160 User group read selection* = "0". *(Refer to page 190)*

Ver.UP … Specifications differ according to the date assembled. *Refer to page 400* to check the SERIAL number.

* The inverter works with the initial parameter setting if a value other than the setting range is set.

CAUTION

When Modbus-RTU communication is performed from the master with address 0 (station 0) set, broadcast communication is selected and the inverter does not send a response message to the master.
When response from the inverter is necessary, set a value other than "0" in *Pr. 331*.
Some functions are invalid for broadcast communication. *(Refer to page 235.)*

REMARKS

- When using the Modbus-RTU protocol, set *Pr. 549 Protocol selection* to "1".
- When the communication option is fitted with *Pr. 550 NET mode operation command source selection* set to "9999" (initial value), the command source (e.g. run command) from the RS-485 terminals is invalid. *(Refer to page 204)*

(1) Communication specifications

· The communication specifications are given below.

Item		Description	Related Parameters
Communication protocol		Modbus-RTU protocol	Pr. 549
Conforming standard		EIA-485 (RS-485)	—
Number of inverters connected		1: N (maximum 32 units), setting is 0 to 247 stations	Pr. 331
Communication speed		Can be selected from 300, 600, 1200, 2400, 4800, 9600, 19200 and 38400bps	Pr. 332
Control protocol		Asynchronous system	—
Communication method		Half-duplex system	—
Communication specifications	**Character system**	Binary(fixed to 8 bits)	—
	Start bit	1bit	—
	Stop bit length	Select from the following three types · No parity, stop bit length 2 bits · Odd parity, stop bit length 1 bit · Even parity, stop bit length 1 bit	Pr. 334
	Parity check		
	Error check	CRC code check	—
	Terminator	Not used	—
Waiting time setting		Not used	—

(2) Outline

The Modbus protocol is the communication protocol developed by Modicon for programmable controller.
The Modbus protocol performs serial communication between the master and slave using the dedicated message frame. The dedicated message frame has the functions that can perform data read and write. Using the functions, you can read and write the parameter values from the inverter, write the input command of the inverter, and check the operating status. In this product, the inverter data are classified in the holding register area (register addresses 40001 to 49999). By accessing the assigned holding register address, the master can communicate with the inverter which is a slave.

REMARKS

There are two different serial transmission modes: ASCII (American Standard Code for Information Interchange) mode and RTU (Remote Terminal Unit) mode. This product supports only the RTU mode in which 1-byte (8-bit) data is transmitted as-is.
Only the communication protocol is defined by the Modbus protocol, and the physical layer is not stipulated.

(3) Message format

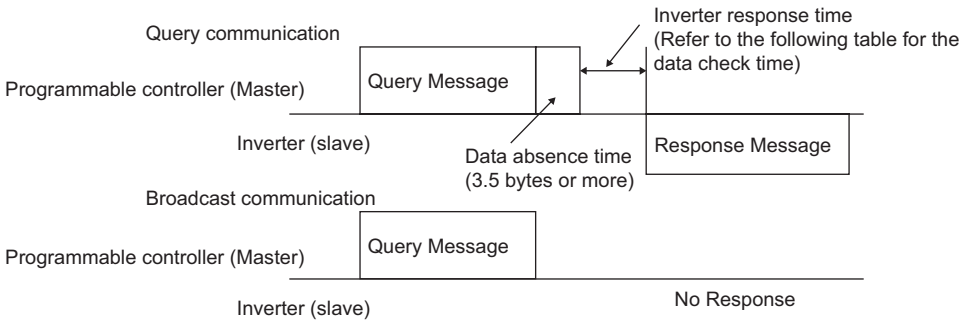

●Data check time

Item	Check Time
Various monitors, operation command, frequency setting (RAM)	< 12ms
Parameter read/write, frequency setting (EEPROM)	< 30ms
Parameter clear/all clear	< 5s
Reset command	No answer

1) Query
The master sends a message to the slave (= inverter) at the specified address.

2) Normal Response
After receiving the query from the master, the slave executes the requested function and returns the corresponding normal response to the master.

3) Error Response
If an invalid function code, address or data is received, the slave returns it to the master.
When a response description is returned, the error code indicating that the request from the master cannot be executed is added.
No response is returned for the hardware-detected error, frame error and CRC check error.

4) Broadcast
By specifying address 0, the master can send a message to all slaves. All slaves that received the message from the master execute the requested function. In this communication, the slaves do not return a response to the master.

REMARKS

The slave executes the function independently of the inverter station number setting (*Pr. 331*) during broadcast communication.

(4) Message frame (protocol)

- Communication method
  Basically, the master sends a query message (question) and the slave returns a response message (response). When communication is normal, Device Address and Function Code are copied as they are, and when communication is abnormal (function code or data code is illegal), bit 7 (= 80h) of Function Code is turned on and the error code is set to Data Bytes.

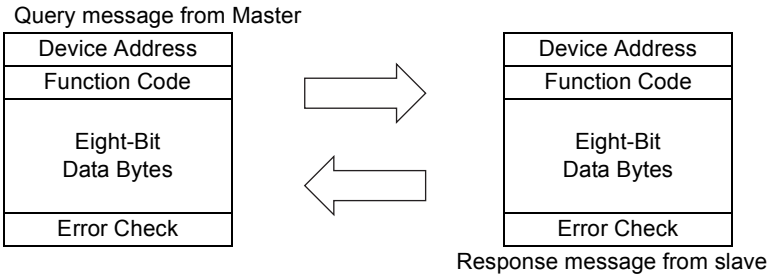

The message frame consists of the four message fields as shown above.
By adding the no-data time (T1: Start, End) of 3.5 characters to the beginning and end of the message data, the slave recognizes it as one message.

- Protocol details
  The four message fields will be explained below.

Start	1) ADDRESS	2) FUNCTION	3) DATA	4) CRC CHECK		End
T1	8bit	8bit	n × 8bit	L 8bit	H 8bit	T1

Message Field	Description
1) ADDRESS field	Is 1 byte long (8 bits), and can be set to any of 0 to 247. Set 0 to send a broadcast message (all-address instruction) or any of 1 to 247 to send a message to each slave. When the slave responds, it returns the address set from the master. The value set to *Pr. 331 RS-485 communication station number* is the slave address.
2) FUNCTION field	The function code is 1 byte long (8 bits) and can be set to any of 1 to 255. The master sets the function that it wants to request from the slave, and the slave performs the requested operation. The following table gives the supported function codes. An error response is returned if the set function code is other than those in the following table. When the slave returns a normal response, it returns the function code set by the master. When the slave returns an error response, it returns H80 + function code.

Code	Function Name	Outline	Broadcast Communication
H03	Read Holding Register	Reads the holding register data.	Disallowed
H06	Preset Single Register	Writes data to the holding register.	Allowed
H08	Diagnostics	Makes a function diagnosis. (communication check only)	Disallowed
H10	Preset Multiple Registers	Writes data to multiple consecutive holding registers.	Allowed
H46	Read Holding Register Access Log	Reads the number of registers that succeeded in communication last time.	Disallowed

Table 1: Function code list

3) DATA field	The format changes depending on the function code *(refer to page236)*. Data includes the byte count, number of bytes, description of access to the holding register, etc.
4) CRC CHECK field	The received message frame is checked for error. CRC check is performed, and 2 byte long data is added to the end of the message. When CRC is added to the message, the low-order byte is added first and is followed by the high-order byte. The CRC value is calculated by the sending side that adds CRC to the message. The receiving side recalculates CRC during message receiving, and compares the result of that calculation and the actual value received in the CRC CHECK field. If these two values do not match, the result is defined as error.

(5) Message format types

The message formats corresponding to the function codes in Table 1 on *page 235* will be explained.

● **Read holding register data (H03 or 03)**

Can read the description of 1) system environment variables, 2) real-time monitor, 3) faults history, and 4) inverter parameters assigned to the holding register area (refer to the register list *(page 241)*).

Query Message

1) Slave Address	2) Function	3) Starting Address		4) No. of Points		CRC Check	
(8bit)	H03 (8bit)	H (8bit)	L (8bit)	H (8bit)	L (8bit)	L (8bit)	H (8bit)

Response message

1) Slave Address	2) Function	5) Byte Count	6) Data			CRC Check	
(8bit)	H03 (8bit)	(8bit)	H (8bit)	L (8bit)	... (n × 16bit)	L (8bit)	H (8bit)

· **Query message setting**

Message	Setting Description
1)Slave Address	Set the address to which the message will be sent. Broadcast communication cannot be made (0 is invalid)
2) Function	Set H03.
3)Starting Address	Set the address at which holding register data read will be started. Starting address = starting register address (decimal) – 40001 For example, setting of the starting address 0001 reads the data of the holding register 40002.
4)No. of Points	Set the number of holding registers from which data will be read. The number of registers from which data can be read is a maximum of 125.

· **Description of normal response**

Message	Setting Description
5)Byte Count	The setting range is H02 to HFA (2 to 250). Twice greater than the No. of Points specified at 4) is set.
6)Data	The number of data specified at 4) is set. Data are read in order of Hi byte and Lo byte, and set in order of starting address data, starting address + 1 data, starting address + 2 data, ...

Example) To read the register values of 41004 *(Pr. 4)* to 41006 *(Pr. 6)* from the slave address 17 (H11)

Query message

Slave Address	Function	Starting Address		No. of Points		CRC Check	
H11 (8bit)	H03 (8bit)	H03 (8bit)	HEB (8bit)	H00 (8bit)	H03 (8bit)	H77 (8bit)	H2B (8bit)

Normal response (Response message)

Slave Address	Function	Byte Count	Data						CRC Check	
H11 (8bit)	H03 (8bit)	H06 (8bit)	H17 (8bit)	H70 (8bit)	H0B (8bit)	HB8 (8bit)	H03 (8bit)	HE8 (8bit)	H2C (8bit)	HE6 (8bit)

Read value
Register 41004 *(Pr. 4)*: H1770 (60.00Hz)
Register 41005 *(Pr. 5)*: H0BB8 (30.00Hz)
Register 41006 *(Pr. 6)*: H03E8 (10.00Hz)

- **Write multiple holding register data (H06 or 06)**

You can write the description of 1) system environment variables and 4) inverter parameters assigned to the holding register area (refer to the register list *(page 241)*).

Query message

1) Slave Address	2) Function	3) Register Address		4) Preset Data		CRC Check	
(8bit)	H06 (8bit)	H (8bit)	L (8bit)	H (8bit)	L (8bit)	L (8bit)	H (8bit)

Normal response (Response message)

1) Slave Address	2) Function	3) Register Address		4) Preset Data		CRC Check	
(8bit)	H06 (8bit)	H (8bit)	L (8bit)	H (8bit)	L (8bit)	L (8bit)	H (8bit)

· **Query message setting**

Message	Setting Description
1) Slave Address	Set the address to which the message will be sent. Setting of address 0 enables broadcast communication
2) Function	Set H06.
3) Register Address	Set the address of the holding register to which data will be written. Register address = holding register address (decimal) – 40001 For example, setting of register address 0001 writes data to the holding register address 40002.
4) Preset Data	Set the data that will be written to the holding register. The written data is always 2 bytes.

· **Description of normal response**

1) to 4) (including CRC check) of the normal response are the same as those of the query message.
No response is made for broadcast communication.

Example) To write 60Hz (H1770) to 40014 (running frequency RAM) at slave address 5 (H05).

Query message

Slave Address	Function	Register Address		Preset Data		CRC Check	
H05 (8bit)	H06 (8bit)	H00 (8bit)	H0D (8bit)	H17 (8bit)	H70 (8bit)	H17 (8bit)	H99 (8bit)

Normal Response (Response message)
Same data as the query message

CAUTION

For broadcast communication, no response is returned in reply to a query. Therefore, the next query must be made when the inverter processing time has elapsed after the previous query.

- **Function diagnosis (H08 or 08)**

A communication check is available since the query message sent is returned unchanged as a response message (function of subfunction code H00). Subfunction code H00 (Return Query Data)

Query Message

1) Slave Address	2) Function	3) Subfunction		4) Date		CRC Check	
(8bit)	H08 (8bit)	H00 (8bit)	H00 (8bit)	H (8bit)	L (8bit)	L (8bit)	H (8bit)

Normal Response (Response message)

1) Slave Address	2) Function	3) Subfunction		4) Date		CRC Check	
(8bit)	H08 (8bit)	H00 (8bit)	H00 (8bit)	H (8bit)	L (8bit)	L (8bit)	H (8bit)

· **Query message setting**

Message	Setting Description
1) Slave Address	Set the address to which the message will be sent. Broadcast communication cannot be made (0 is invalid)
2) Function	Set H08.
3) Subfunction	Set H0000.
4) Data	Any data can be set if it is 2 bytes long. The setting range is H0000 to HFFFF.

· **Description of normal response**

1) to 4) (including CRC check) of the normal response are the same as those of the query message.

CAUTION

For broadcast communication, no response is returned in reply to a query. Therefore, the next query must be made when the inverter processing time has elapsed after the previous query.

- **Write multiple holding register data (H10 or 16)**

You can write data to multiple holding registers.

Query message

1) Slave Address	2) Function	3) Starting Address		4) No. of Registers		5) ByteCount	6) Data			CRC Check	
(8bit)	H10 (8bit)	H (8bit)	L (8bit)	H (8bit)	L (8bit)	(8bit)	H (8bit)	L (8bit)	... (n × 2 × 8bit)	L (8bit)	H (8bit)

Normal Response (Response message)

1) Slave Address	2) Function	3) Starting Address		4) No. of Registers		CRC Check	
(8bit)	H10 (8bit)	H (8bit)	L (8bit)	H (8bit)	L (8bit)	L (8bit)	H (8bit)

· **Query message setting**

Message	Setting Description
1) Slave Address	Set the address to which the message will be sent. Setting of address 0 enables broadcast communication
2) Function	Set H10.
3) Starting Address	Set the address where holding register data write will be started. Starting address = starting register address (decimal) – 40001 For example, setting of the starting address 0001 reads the data of the holding register 40002.
4) No. of Points	Set the number of holding registers where data will be written. The number of registers where data can be written is a maximum of 125.
5) Byte Count	The setting range is H02 to HFA (2 to 250). Set twice greater than the value specified at 4).
6) Data	Set the data specified by the number specified at 4). The written data are set in order of Hi byte and Lo byte, and arranged in order of the starting address data, starting address + 1 data, starting address + 2 data ...

· **Description of normal response**

1) to 4) (including CRC check) of the normal response are the same as those of the query message.

Example) To write 0.5s (H05) to 41007 *(Pr. 7)* at the slave address 25 (H19) and 1s (H0A) to 41008 *(Pr. 8)*.

Query Message

Slave Address	Function	Starting Address		No. of Points		Byte Count	Data				CRC Check	
H19 (8bit)	H10 (8bit)	H03 (8bit)	HEE (8bit)	H00 8bit)	H02 (8bit)	H04 (8bit)	H00 (8bit)	H05 (8bit)	H00 (8bit)	H0A (8bit)	H86 (8bit)	H3D (8bit)

Response message (Response message)

Slave Address	Function	Starting Address		No. of Points		CRC Check	
H19 (8bit)	H10 (8bit)	H03 (8bit)	HEE (8bit)	H00 (8bit)	H02 (8bit)	H22 (8bit)	H61 (8bit)

● **Read holding register access log (H46 or 70)**

A response can be made to a query made by the function code H03 or H10.
The starting address of the holding registers that succeeded in access during previous communication and the number of successful registers are returned.
In response to the query for other than the above function code, 0 is returned for the address and number of registers.

Query Message

1) Slave Address	2) Function	CRC Check	
(8bit)	H46 (8bit)	L (8bit)	H (8bit)

Normal Response (Response message)

1) Slave Address	2) Function	3) Starting Address		4) No. of Points		CRC Check	
(8bit)	H46 (8bit)	H (8bit)	L (8bit)	H (8bit)	L (8bit)	L (8bit)	H (8bit)

· **Query message setting**

Message	Setting Description
1) Slave Address	Set the address to which the message will be sent. Broadcast communication cannot be made (0 is invalid)
2) Function	Set H46.

· **Description of normal response**

Message	Setting Description
3) Starting Address	The starting address of the holding registers that succeeded in access is returned. Starting address = starting register address (decimal) – 40001 For example, when the starting address 0001 is returned, the address of the holding register that succeeded in access is 40002.
4) No. of Points	The number of holding registers that succeeded in access is returned.

Example) To read the successful register starting address and successful count from the slave address 25 (H19).

Query Message

Slave Address	Function	CRC Check	
H19 (8bit)	H46 (8bit)	H8B (8bit)	HD2 (8bit)

Normal Response (Response message)

Slave Address	Function	Starting Address		No. of Points		CRC Check	
H19 (8bit)	H10 (8bit)	H03 (8bit)	HEE (8bit)	H00 (8bit)	H02 (8bit)	H22 (8bit)	H61 (8bit)

Success of two registers at starting address 41007 *(Pr. 7)* is returned.

- **Error response**

An error response is returned if the query message received from the master has an illegal function, address or data. No response is returned for a parity, CRC, overrun, framing or busy error.

CAUTION

No response message is sent in the case of broadcast communication also.

Error response (Response message)

1) Slave Address	2) Function	3) Exception Code	CRC Check	
(8bit)	H80 + Function (8bit)	(8bit)	L (8bit)	H (8bit)

Message	Setting Description
1) Slave address	Set the address received from the master.
2) Function	The master-requested function code + H80 is set.
3) Exception code	The code in the following table is set.

Error code list

Code	Error Item	Error Definition
01	ILLEGAL FUNCTION	The set function code in the query message from the master cannot be handled by the slave.
02	ILLEGAL DATA ADDRESS *1	The set register address in the query message from the master cannot be handled by the inverter. (No parameter, parameter read disabled, parameter write disabled)
03	ILLEGAL DATA VALUE	The set data in the query message from the master cannot be handled by the inverter. (Out of parameter write range, mode specified, other error)

*1 An error will not occur in the following cases.
1) Function code H03 (Read Holding Register Data)
When the No. of Points is 1 or more and there is one or more holding registers from which data can be read
2) Function code H10 (Write Multiple Holding Register Data)
When the No. of Points is 1 or more and there is 1 or more holding registers to which data can be written
Namely, when the function code H03 or H10 is used to access multiple holding registers, an error will not occur if a non-existing holding register or read disabled or write disabled holding register is accessed.

REMARKS

An error will occur if all accessed holding registers do not exist.
Data read from a non-existing holding register is 0, and data written there is invalid.

- **Message data mistake detection**

To detect the mistakes of message data from the master, they are checked for the following errors. If an error is detected, a trip will not occur.

Error check item

Error Item	Error Definition	Inverter Side Operation
Parity error	The data received by the inverter differs from the specified parity (*Pr. 334* setting).	1) *Pr. 343* is increased by 1 at error occurrence. 2) The terminal LF is output at error occurrence.
Framing error	The data received by the inverter differs from the specified stop bit length (*Pr. 334*).	
Overrun error	The following data was sent from the master before the inverter completes data receiving.	
Message frame error	The message frame data length is checked, and the received data length of less than 4 bytes is regarded as an error.	
CRC check error	A mismatch found by CRC check between the message frame data and calculation result is regarded as an error.	

(6) Modbus registers

- System environment variable

Register	Definition	Read/Write	Remarks
40002	Inverter reset	Write	Any value can be written
40003	Parameter clear	Write	Set H965A as a written value.
40004	All parameter clear	Write	Set H99AA as a written value.
40006	Parameter clear *1	Write	Set H5A96 as a written value.
40007	All parameter clear *1	Write	Set HAA99 as a written value.
40009	Inverter status/control input instruction *2	Read/write	See below.
40010	Operation mode/inverter setting *3	Read/write	See below.
40014	Running frequency (RAM value)	Read/write	According to the *Pr. 37* and *Pr. 144* settings, the frequency and selectable speed are in 1r/min increments.
40015	Running frequency (EEPROM value)	Write	

*1 The communication parameter values are not cleared.
*2 For write, set the data as a control input instruction. For read, data is read as an inverter operating status.
*3 For write, set data as the operation mode setting. For read, data is read as the operation mode status.

<Inverter status/control input instruction>

Bit	Definition	
	Control input instruction	Inverter status
0	Stop command	RUN (inverter running) *2
1	Forward rotation command	Forward rotation
2	Reverse rotation command	Reverse rotation
3	RH (high speed operation command) *1	SU (up to frequency) *2
4	RM (middle speed operation command) *1	OL (overload) *2
5	RL (low speed operation command) *1	IPF (instantaneous power failure) *2
6	JOG (Jog operation) *1	FU (frequency detection) *2
7	RT (second function selection) *1	ABC1 (fault) *2
8	AU (current input selection) *1	ABC2 (—) *2
9	CS (selection of automatic restart after instantaneous power failure) *1	0
10	MRS (output stop) *1	0
11	STOP (start self-holding) *1	0
12	RES (reset) *1	0
13	0	0
14	0	0
15	0	Fault occurrence

*1 The signal within parentheses is the initial setting. The description changes depending on the setting of *Pr. 180 to Pr. 189 (input terminal function selection) (page122)*.
Each assigned signal is valid or invalid depending on NET. *(Refer to page 204)*
*2 The signal within parentheses is the initial setting. The description changes depending on the setting of *Pr. 190 to Pr. 196 (output terminal function selection) (page128)*.

<Operation mode/inverter setting>

Mode	Read Value	Written Value
EXT	H0000	H0010 *
PU	H0001	H0011 *
EXT JOG	H0002	—
PU JOG	H0003	—
NET	H0004	H0014
PU+ EXT	H0005	—

* Writing is available depending on the *Pr. 79* and *Pr. 340* setting. *Refer to page 203* for details.

The restrictions depending on the operation mode changes according to the computer link specifications.

- Real-time monitor

Refer to page 141 for details of the monitor description.

Register	Description	Increments
40201	Output frequency/Speed *4	0.01Hz/1
40202	Output current	0.01A/0.1A *1
40203	Output voltage	0.1V
40205	Frequency setting value/Speed setting *4	0.01Hz/1
40206	Running speed	1r/min
40208	Converter output voltage	0.1V
40209	Regenerative brake duty	0.1%
40210	Electronic thermal relay function load factor	0.1%
40211	Output current peak value	0.01A/0.1A *1
40212	Converter output voltage peak value	0.1V
40213	Input power	0.01kW/0.1kW *1
40214	Output power	0.01kW/0.1kW *1
40215	Input terminal status *2	—
40216	Output terminal status *3	—
40217	Load meter	0.1%
40220	Cumulative energization time	1h
40223	Actual operation time	1h
40224	Motor load factor	0.1%
40225	Cumulative power	1kWh
40250	Power saving effect	Variable

Register	Description	Increments
40251	Cumulative saving power	Variable
40252	PID set point	0.1%
40253	PID measured value	0.1%
40254	PID deviation	0.1%
40258	Option input terminal status 1 Ver.UP *5	—
40259	Option input terminal status 2 Ver.UP *6	—
40260	Option output terminal status Ver.UP *7	—
40267	PID measured value 2	0.1%
40277	32-bit cumulative power (lower 16-bit) Ver.UP	1kWh
40278	32-bit cumulative power (upper 16-bit) Ver.UP	1kWh
40279	32-bit cumulative power (lower 16-bit) Ver.UP	0.01kWh/ 0.1kWh *1
40280	32-bit cumulative power (upper 16-bit) Ver.UP	0.01kWh/ 0.1kWh *1

Ver.UP .... Specifications differ according to the date assembled. *Refer to page 400* to check the SERIAL number.

*1 The setting depends on capacities. (FR-F720-02330 (FR-F740-01160) or less/FR-F720-03160 (FR-F740-01800) or more)

*2 Input terminal monitor details

b15															b0
—	—	—	—	CS	RES	STOP	MRS	JOG	RH	RM	RL	RT	AU	STR	STF

*3 Output terminal monitor details

b15															b0
—	—	—	—	—	—	—	—	—	ABC2	ABC1	FU	OL	IPF	SU	RUN

*4 When *Pr.37* = "1 to 9998" or *Pr. 144* = "2 to 10, 102 to 110," the unit is an integral value (one increment). *(Refer to page 139)*

*5 Option input terminal 1 monitor details (input terminal status of FR-A7AX) All OFF if option is not installed.

b15															b0
X15	X14	X13	X12	X11	X10	X9	X8	X7	X6	X5	X4	X3	X2	X1	X0

*6 Option input terminal 2 monitor details (input terminal status of FR-A7AX) All OFF if option is not installed.

b15															b0
—	—	—	—	—	—	—	—	—	—	—	—	—	—	—	DY

*7 Option output terminal monitor details (output terminal status of FR-A7AY) All OFF if option is not installed.

b15															b0
—	—	—	—	—	—	RA3	RA2	RA1	Y6	Y5	Y4	Y3	Y2	Y1	Y0

- Parameter

Parameters	Register	Parameter Name	Read/Write	Remarks
0 to 999	41000 to 41999	Refer to the parameter list *(page 62)* for the parameter names.	Read/write	The parameter number + 41000 is the register number.
C2(902)	41902	Terminal 2 frequency setting bias (frequency)	Read/write	
C3(902)	42092	Terminal 2 frequency setting bias (analog value)	Read/write	The analog value (%) set to *C3 (902)* is read.
	43902	Terminal 2 frequency setting bias (terminal analog value)	Read	The analog value (%) of the voltage (current) applied to the terminal 2 is read.
125(903)	41903	Terminal 2 frequency setting gain (frequency)	Read/write	
C4(903)	42093	Terminal 2 frequency setting gain (analog value)	Read/write	The analog value (%) set to *C4 (903)* is read.
	43903	Terminal 2 frequency setting gain (terminal analog value)	Read	The analog value (%) of the voltage (current) applied to the terminal 2 is read.
C5(904)	41904	Terminal 4 frequency setting bias (frequency)	Read/write	
C6(904)	42094	Terminal 4 frequency setting bias (analog value)	Read/write	The analog value (%) set to *C6 (904)* is read.
	43904	Terminal 4 frequency setting bias (terminal analog value)	Read	The analog value (%) of the current (voltage) applied to the terminal 4 is read.
126(905)	41905	Terminal 4 frequency setting gain (frequency)	Read/write	
C7(905)	42095	Terminal 4 frequency setting gain (analog value)	Read/write	The analog value (%) set to *C7 (905)* is read.
	43905	Terminal 4 frequency setting gain (terminal analog value)	Read	The analog value (%) of the current (voltage) applied to the terminal 4 is read.
C8(930)	41930	Current output bias signal	Read/write	
C9(930)	42120	Current output bias current	Read/write	
C10(931)	41931	Current output gain signal	Read/write	
C11(931)	42121	Current output gain current	Read/write	
C42(934)	41934	PID display bias coefficient	Read/write	
C43(934)	42124	PID display bias analog value	Read/write	The analog value (%) set to *C43 (934)* is read.
	43934	PID display bias analog value (terminal analog value)	Read	The analog value (%) of the current (voltage) applied to the terminal 4 is read.
C44(935)	41935	PID display gain coefficient	Read/write	
C45(935)	42125	PID display gain analog value	Read/write	The analog value (%) set to *C45 (935)* is read.
	43935	PID display gain analog value (terminal analog value)	Read	The analog value (%) of the current (voltage) applied to the terminal 4 is read.

- Faults history

Register	Definition	Read/Write	Remarks
40501	Fault history 1	Read/write	Being 2 bytes in length, the data is stored as "H00○○". Refer to the lowest 1 byte for the fault code. Performing write using the register 40501 batch-clears the faults history. Set any value as data.
40502	Fault history 2	Read	
40503	Fault history 3	Read	
40504	Fault history 4	Read	
40505	Fault history 5	Read	
40506	Fault history 6	Read	
40507	Fault history 7	Read	
40508	Fault history 8	Read	

Fault code list

Data	Description
H00	No fault
H10	OC1
H11	OC2
H12	OC3
H20	OV1
H21	OV2
H22	OV3
H30	THT
H31	THM
H40	FIN
H50	IPF
H51	UVT

Data	Description
H52	ILF
H60	OLT
H70	BE
H80	GF
H81	LF
H90	OHT
H91	PTC
HA0	OPT
HA1	OP1
HA2	OP2
HA4	E.16 *
HA5	E.17 *

Data	Description
HA6	E.18 *
HA7	E.19 *
HA8	E.20 *
HB0	PE
HB1	PUE
HB2	RET
HB3	PE2
HC0	CPU
HC1	CTE
HC2	P24
HC4	CDO
HC5	IOH

Data	Description
HC6	SER
HC7	AIE
HE4	LCI
HE5	PCH
HE6	PID
HF1	E.1
HF2	E.2
HF5	E.5
HF6	E.6
HF7	E.7
HFD	E.13

* Refer to the FR-F700 PLC function programming manual for details of the PLC function.

- Model information monitor Ver.UP

Register	Definition	Read/Write	Remarks
44001 to 44010	Inverter type	Read	Reading inverter type in ASCII code. "H20" (blank code) is set for blank area Example of FR-F720-NA H46, H52, H2D, H46, H37, H32, H30, H2D, H4E, H41, H20.....H20
44011 to 44013	Capacity	Read	Reading inverter capacity in ASCII code. Data is read in increments of 0.1kW, and rounds down to 0.01kW increments "H20" (blank code) is set for blank area Example 0.75K..... " 7" (H20, H20, H20, H20, H20, H37)

Ver.UP … Specifications differ according to the date assembled. *Refer to page 400* to check the SERIAL number.

(7) Pr. 343 Communication error count

You can check the cumulative number of communication errors.

Parameters	Setting Range	Minimum Setting Range	Initial Value
343	(Read only)	1	0

CAUTION

The number of communication errors is temporarily stored into the RAM. As it is not stored into the EEPROM, performing a power supply reset or inverter reset clears the value to 0.

(8) Output signal LF "alarm output (communication error warnings)"

During a communication error, the alarm signal (LF signal) is output by open collector output. The LF signal can be assigned to the output terminal using any of *Pr. 190 to Pr. 196 (output terminal function selection)*.

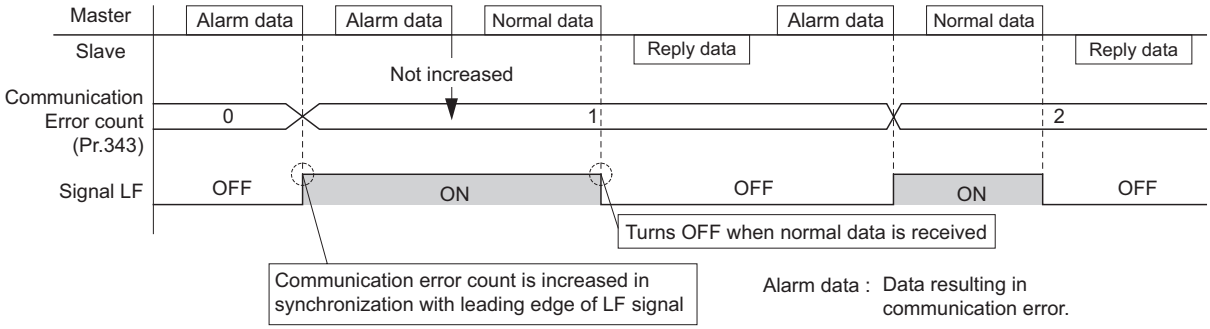

CAUTION

Changing the terminal assignment using *Pr. 190 to Pr. 196 (output terminal function selection)* may affect the other functions. Set parameters after confirming the function of each terminal.

(9) Signal loss detection (*Pr. 539 Modbus-RTU communication check time interval*)

If a signal loss (communication stop) is detected between the inverter and master as a result of a signal loss detection, a communication error (E.SER) occurs and the inverter output is shut off.

- When the setting is "9999", communication check (signal loss detection) is not made.
- When the setting value is "0", monitor, parameter read, etc. can be performed. However, a communication error (E.SER) occurs as soon as the inverter is switched to the Network operation mode.
- A signal loss detection is made when the setting is any of "0.1s to 999.8s". To make a signal loss detection, it is necessary to send data from the master within the communication check time interval. (The inverter makes communication check (clearing of communication check counter) regardless of the station number setting of the data sent from the master.)
- Communication check is started from the first communication after switching to the Network operation mode (use *Pr. 551 PU mode operation command source selection* to change).
- Communication check time of query communication includes data absence time (3.5 byte).
  Since this data absence time differs according to the communication speed, make setting considering this absence time.

Example: RS-485 terminal communication, *Pr. 539* **= "0.1 to 999.8s"**

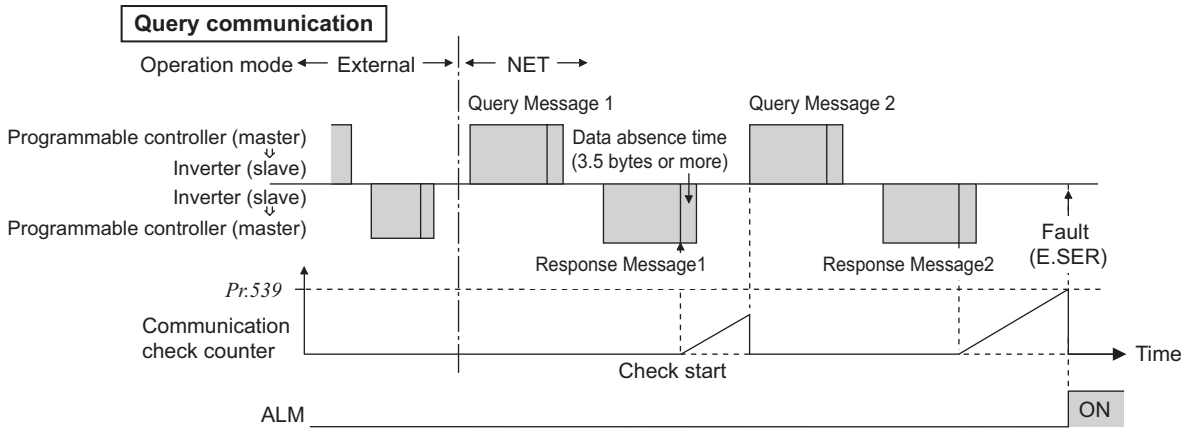

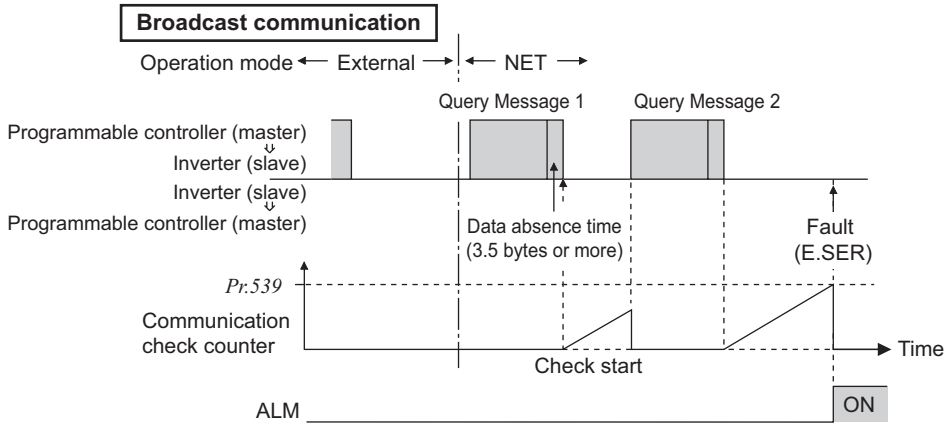

REMARKS

When using RS-485 terminal communication, inverter behaviour at fault occurrence is different depending on *Pr. 502 Stop mode selection at communication error* setting. *(Refer to page 216)*

4.19.8 BACnet MS/TP protocol

Using BACnet MS/TP protocol, communication operation and parameter setting are available from the RS-485 terminals of the inverter.

Parameter Number	Name	Initial Value	Setting Range	Description
52 Ver.UP	DU/PU main display data selection	0 (output frequency)	0, 5, 6, 8 to 14, 17, 20, 23 to 25, 50 to 57, 67, 81 to 86, 100	81: BACnet reception status 82: BACnet token pass counter (Displays the count of received token) 83: BACnet valid APDU counter (Displays the count of valid APDU detection) 84: BACnet communication error counter (Displays the count of communication error) 85: Terminal CA output level (Same display as AnalogOutput0) 86: Terminal AM output level (Same display as AnalogOutput1) The monitor of setting value "82 and 83" return to 0 if the count exceeds 9999. For the monitor of setting value "84", 9999 is the maximum.
774 775 776 Ver.UP	PU/DU monitor selection 1 PU/DU monitor selection 2 PU/DU monitor selection 3	9999	1 to 3, 5, 6, 8 to 14, 17, 20, 23 to 25, 40 to 42, 50 to 57, 67, 81 to 86, 100, 9999	
331 Ver.UP	RS-485 communication station number	0	0 to 127 *1	Set the inverter station number (node).
332 Ver.UP	RS-485 communication speed	96	96, 192, 384, 768 *1 *2	Set the communication speed. The setting value × 100 equals the communication speed. For example, the communication speed is 9600bps when the setting value is "96".
390 Ver.UP	% setting reference frequency	60Hz	1 to 400Hz	Set a reference frequency of the set frequency.
549 Ver.UP	Protocol selection	1	0	Mitsubishi inverter (computer link) protocol
			1	Modbus-RTU protocol
			2	BACnet MSTP protocol
726 Ver.UP	Auto Baudrate/Max Master	255	0 to 255	Auto baud rate (bit7) Setting range: 0 (Inactive) 1 (Active)
				Max Master (bit0 to bit6) setting range: 0 to 127 Maximum address for master node
727 Ver.UP	Max Info Frames	1	1 to 255	Set the maximum number of messages that the inverter can transmit while it owns the token.
728 Ver.UP	Device instance number (Upper 3 digit)	0	0 to 419 (0 to 418)	Device identifier (Duplicated setting available) Setting range of the combination of *Pr. 728* and *Pr. 729* are "0 to 4194302". When *Pr.728* = "419", setting range of *Pr. 729* is "0 to 4302" When *Pr.729* = "4303" or more, setting range of *Pr. 728* is "0 to 418"
729 Ver.UP	Device instance number (Lower 4 digit)	0	0 to 9999 (0 to 4302)	

The above parameters can be set when *Pr. 160 User group read selection* = "0". *(Refer to page 190)*

Ver.UP .....Specifications differ according to the date assembled. *Refer to page 400* to check the SERIAL number.

*1 The inverter works with the initial parameter setting if a value other than the setting range is set.

*2 When using Auto baudrate, the communication speed is changed to the detected communication speed.

♦ Parameters referred to ♦

Pr. 336 RS-485 communication check time interval ☞ *Refer to page 214*
Pr. 338 Communication operation command source ☞ *Refer to page 204*
Pr. 339 Communication speed command source ☞ *Refer to page 204*
Pr. 340 Communication startup mode selection ☞ *Refer to page 203*
Pr. 342 Communication EEPROM write selection ☞ *Refer to page 216*
Pr. 502 Modbus-RTU communication check time interval ☞ *Refer to page 216*
Pr. 550 NET mode operation command source selection ☞ *Refer to page 204*
Pr. 551 PU mode operation command source selection ☞ *Refer to page 204*

(1) Specifications

● Communication specifications (conforming to BACnet standard of physical medium EIA-485)

Item		Description
Physical medium		EIA-485 (RS-485)
	Connection port	RS-485 terminal (PU connector is not available)
	Data transfer method	NRZ encoding
	Baud rate	9600bps, 19200bps, 38400bps, 76800bps
	Start bit	Fixed to 1Bit
	Data length	Fixed to 8Bit
	Parity bit	Fixed to none
	Stop bit	Fixed to 1Bit
Network topology		Bus topology
Communication method		Token passing (token bus)
		Master-slave (only the master is available for this product)
Communication protocol		MS/TP (master-slave/token passing LAN)
Maximum connection		255 (up to 32 for one segment, addition with a repeater is available)
Node number		0 to 127
	Master	0 to 127 (this product is the master)
Supported property of BACnet standard object type		*Refer to page 250*
Supported BIBBs (Annex K)		*Refer to page 258*
BACnet standard device profile (Annex L)		*Refer to page 258*
Segmentation		Not supported
Device address binding		Not supported

REMARKS

- This product conforms to BACnet Application Specific Controller (B-ASC).
- This product is designed for multiple master network, therefore 2-wire type connection is supported.

● Node with network bias resistors

This product is a node with local bias resistors. Therefore at least one node must be a node with network bias resistors in the network configuration.

When configuring the network with only this products, refer to the following, and make the node with network bias resistors. (When using two sets in one segment, insert them into both end of the network.)

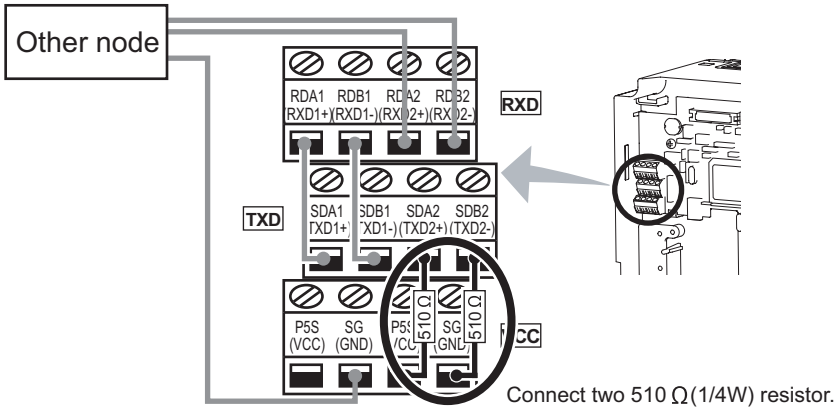

(2) BACnet reception status monitor (Pr.52)

Set *Pr. 52* = "81" to monitor BACnet communication status on the operation panel (FR-DU07) and parameter unit (FR-PU04/FR-PU07).

Status	Data	Description	LF signal
Idle	0	Never had BACnet communication	OFF
Automatic baud rate recognition	1	During automatic baud rate recognition (Communication error during automatic baud rate recognition is not counted)	OFF
Not joined the network	2	Waiting for a token to the own node	OFF
Data to the own node	10	Received a token to the own node	OFF
	11	Received a supported request to the own node (including broadcasting)	OFF
	12	Received an unsupported request to the own node (including broadcasting)	OFF
Data to the other node	20	Received a token to other nodes	OFF
Node separated	30	Separated from token passing after joined in it	OFF
Error data	90	Detected a communication error	ON
	91	Protocol error (LPDU, NPDU, APDU are not following the format regulations.)	ON

(3) % setting reference frequency (Pr. 390)

Setting of a reference frequency to the set frequency is available.
The setting value of *Pr. 390 % setting reference frequency* is 100% reference. The reference to the frequency command is converted to the set frequency in the following formula.

• Set frequency = *Pr. 390 % setting reference frequency* × Speed scale *(Refer to page 252)*

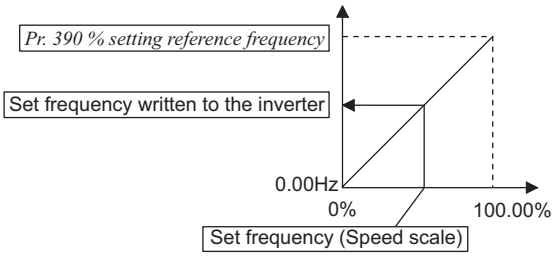

REMARKS

- The % setting reference frequency cannot be set at less than the minimum frequency resolution of the inverter.
- The set frequency is written to RAM.
- The set frequency is applied at the writing of Speed scale. (The set frequency is not applied at the setting of *Pr. 390*.)

(4) Automatic baud rate recognition (Pr. 726 Auto Baudrate/Max Master)

Automatic changing of baud rate is available with *Pr. 726* setting. When *Pr. 726* = "128 to 255", turn the power ON from OFF or reset the inverter to start automatic baud rate recognition.

Pr. 726 setting	Description
0 to 127	Automatic baud rate recognition is invalid (Using *Pr. 332* setting for baud rate)
128 to 255	Inverter monitors the data on the communication bus, and changes the baud rate from *Pr. 332* setting. The recognized baud rate is written to *Pr. 332*.

REMARKS

- After the baud rate recognition, the recognised baud rate is written in EEPROM of *Pr. 332* regardless of *Pr. 342 Communication EEPROM write selection* setting.
- BACnet status monitor displays "1" during automatic baud rate recognition.
- Communication error count monitor is not performed during automatic baud rate recognition.

CAUTION

- During automatic baud rate recognition, inverter does not transmit data, but only accepts data.
- Automatic baud rate recognition cannot finish if inverter is not connected to the communication bus. (BACnet protocol will not be established.)
- Automatic baud rate recognition cannot finish if inverter is receiving abnormal data continuously. (BACnet protocol will not be established.)

(5) Supported property of BACnet standard object type

R: Read only W: Read/Write (Commandable values not supported) C: Read/Write (Commandable values supported)

Property \ Object	Analog Input	Analog Output	Analog Value	Binary Input	Binary Output	Binary Value	Device
APDU Timeout							R
Application Software Version							R
Database Revision							R
Device Address Binding							R
Event State	R	R	R	R	R	R	
Firmware Revision							R
Max APDU Length Accepted							R
Max Info Frames							W
Max Master							W
Model Name							R
Number of APDU Retries							R
Object Identifier	R	R	R	R	R	R	R
Object List							R
Object Name	R	R	R	R	R	R	R
Object Type	R	R	R	R	R	R	R
Out Of Service	R	R	R	R	R	R	
Polarity				R	R		
Present Value	R	C	C *1	R	C	C *1	
Priority Array		R	R *2		R	R *2	
Protocol Object Types Supported							R
Protocol Revision							R
Protocol Services Supported							R
Protocol Version							R
Relinquish Default		R	R *2		R	R *2	
Segmentation Supported							R
Status Flags	R	R	R	R	R	R	
System Status							R
Unit	R	R	R				
Vendor Identifier							R
Vendor Name							R

*1 This property is commandable for some instances of this object. Otherwise it is read/write.
*2 This property is supported only for instances of this object where the Present Value property is commandable.

(6) Supported BACnet object

ANALOG INPUT

Object Identifier	Object Name	Present Value Access Type *1	Description	Unit
0	Terminal 1	R	Represents actual input voltage of terminal 1. (The range varies depending on the *Pr. 73* and *Pr. 267* settings. -10 to +10V (-100% to +100%), -5 to +5V (-100% to +100%))	percent (98)
1	Terminal 2	R	Represents actual input voltage (or input current) of terminal 2. (The range varies depending on the *Pr. 73* and *Pr. 267* settings. 0 to 10V (0% to 100%), 0 to 5V (0% to 100%), 0 to 20mA (0% to 100%))	percent (98)
2	Terminal 4	R	Represents actual input voltage (or input current) of terminal 4. (The range varies depending on the *Pr. 73* and *Pr. 267* settings. 2 to 10V (0% to 100%), 1 to 5V (0% to 100%), 4 to 20mA (0% to 100%))	percent (98)

*1 R: Read only W: Read/Write (Commandable values not supported) C: Read/Write (Commandable values supported)

ANALOG OUTPUT

Object Identifier	Object Name	Present Value Access Type *1	Description	Unit
0	Terminal CA	C	Controls actual output current level of terminal CA. Control is available when *Pr. 54 CA terminal function selection* = "85" *2. (Setting range: 0.0% to 100.0% (0 to 20mA))	percent (98)
1	Terminal AM	C	Controls actual output voltage level of terminal AM. Control is available when *Pr. 158 AM terminal function selection* = "86" *2. (Setting range: 0.0% to 100.0% (0 to 10V))	percent (98)

*1 R: Read only W: Read/Write (Commandable values not supported) C: Read/Write (Commandable values supported)
*2 Available regardless of the operation mode, operation command source and speed command source.

ANALOG VALUE

Object Identifier	Object Name	Present Value Access Type *1	Description	Unit
1	Output frequency	R	Represents the output frequency monitor.	hertz (27)
2	Output current	R	Represents the output current monitor.	amperes (3)
3	Output voltage	R	Represents the output voltage monitor.	volts (5)
6	Running speed	R	Represents the running speed monitor.	revolution-per-minute (104)
8	Converter output voltage	R	Represents the converter output voltage monitor.	volts (5)
14	Output power	R	Represents the output power monitor.	kilowatts (48)
17	Load meter	R	Represents the load meter monitor.	percent (98)
20	Cumulative energization time	R	Represents the cumulative energization time monitor.	hours (71)
23	Actual operation time	R	Represents the actual operation time monitor.	hours (71)
25	Cumulative power	R	Represents the cumulative power monitor.	kilowatt-hours (19)
52	PID set point	R	Represents the PID set point monitor.	no-units (95)
54	PID deviation	R	Represents the PID deviation monitor. (minus display is available with reference to 0%, 0.1% increment)	no-units (95)
67	PID measured value 2	R	Represents the PID measured value 2 monitor.	no-units (95)
200	Alarm history 1	R	Represents the fault history 1 (the latest fault) monitor.	no-units (95)
201	Alarm history 2	R	Represents the fault history 2 (second fault in past) monitor.	no-units (95)
202	Alarm history 3	R	Represents the fault history 3 (third fault in past) monitor.	no-units (95)
203	Alarm history 4	R	Represents the fault history 4 (fourth fault in past) monitor.	no-units (95)
300	Speed scale *2	C	Controls the ratio to the frequency command. (Setting range: 0.00 to 100.00) *(Refer to page 249)*	percent (98)
310	PID set point CMD *2	C	Controls the PID set point. This object is the PID set point during PID operation if *Pr. 128 (Pr. 753)* = "60 or 61" (Setting range: 0.00 to 100.00) *3	no-units (95)
311	PID measured value CMD *2	C	Controls the PID measured value. This object is the PID measured value during PID operation if *Pr. 128 (Pr. 753)* = "60 or 61" (Setting range: 0.00 to 100.00) *3	no-units (95)
312	PID deviation CMD *2	C	Controls the PID deviation. This object is the PID deviation during PID operation if *Pr. 128 (Pr. 753)* = "50 or 51" (Setting range: -100.00 to 100.00)	percent (98)
398	Mailbox parameter	W	Access to the properties which are not defined as objects are available. *(Refer to page 255)*	no-units (95)
399	Mailbox value	W		no-units (95)
10007	Acceleration time	W	Sets *Pr.7 Acceleration time*	seconds (73)
10008	Deceleration time	W	Sets *Pr.8 Deceleration time*	seconds (73)

*1 R: Read only W: Read/Write (Commandable values not supported) C: Read/Write (Commandable values supported)
*2 If communication speed command source is except for NET, the setting value can be written, but not to be applied.
*3 When both *C42 (Pr. 934)* and *C44 (Pr. 935)* ≠ "9999", setting range is smaller coefficient to larger coefficient of *C42 (Pr. 934)* and *C44 (Pr. 935)*. Depending on a value, the writing value and the reading value may not be same at the minimum digit.

BINARY INPUT

Object Identifier	Object Name	Present Value Access Type *1	Description (0: Inactive 1: Active)
0	Terminal STF	R	Represents actual input of terminal STF. (Represents actual input of terminal X1 when FR-A7AC is installed.)
1	Terminal STR	R	Represents actual input of terminal STR. (Represents actual input of terminal X2 when FR-A7AC is installed.)
2	Terminal AU	R	Represents actual input of terminal AU.
3	Terminal RT	R	Represents actual input of terminal RT. (Represents actual input of terminal X6 when FR-A7AC is installed.)
4	Terminal RL	R	Represents actual input of terminal RL. (Represents actual input of terminal X3 when FR-A7AC is installed.)
5	Terminal RM	R	Represents actual input of terminal RM. (Represents actual input of terminal X4 when FR-A7AC is installed.)
6	Terminal RH	R	Represents actual input of terminal RH. (Represents actual input of terminal X5 when FR-A7AC is installed.)
7	Terminal JOG	R	Represents actual input of terminal JOG.
8	Terminal MRS	R	Represents actual input of terminal MRS. (Represents actual input of terminal X8 when FR-A7AC is installed.)
9	Terminal STOP	R	Represents actual input of terminal STOP.
10	Terminal RES	R	Represents actual input of terminal RES.
11	Terminal CS	R	Represents actual input of terminal CS. (Represents actual input of terminal X7 when FR-A7AC is installed.)
100	Terminal RUN	R	Represents actual output of terminal RUN.
101	Terminal SU	R	Represents actual output of terminal SU.
102	Terminal IPF	R	Represents actual output of terminal IPF.
103	Terminal OL	R	Represents actual output of terminal OL.
104	Terminal FU	R	Represents actual output of terminal FU.
105	Terminal ABC1	R	Represents actual output of terminal ABC1.
106	Terminal ABC2	R	Represents actual output of terminal ABC2.

*1 R: Read only W: Read/Write (Commandable values not supported) C: Read/Write (Commandable values supported)

BINARY OUTPUT

Object Identifier	Object Name	Present Value Access Type *1	Description (0: Inactive 1: Active)
0	Terminal RUN CMD	C	Controls actual output of terminal RUN. Available when *Pr. 190 RUN terminal function selection* = "82 or 182". *2
1	Terminal SU CMD	C	Controls actual output of terminal SU. Available when *Pr. 191 SU terminal function selection* = "82 or 182". *2
2	Terminal IPF CMD	C	Controls actual output of terminal IPF. Available when *Pr. 192 IPF terminal function selection* = "82 or 182". *2
3	Terminal OL CMD	C	Controls actual output of terminal OL. Available when *Pr. 193 OL terminal function selection* = "82 or 182". *2
4	Terminal FU CMD	C	Controls actual output of terminal FU. Available when *Pr. 194 FU terminal function selection* = "82 or 182". *2
5	Terminal ABC1 CMD	C	Controls actual output of terminal ABC1. Available when *Pr. 195 ABC1 terminal function selection* = "82 or 182". *2
6	Terminal ABC2 CMD	C	Controls actual output of terminal ABC2. Available when *Pr. 196 ABC2 terminal function selection* = "82 or 182". *2

*1 R: Read only W: Read/Write (Commandable values not supported) C: Read/Write (Commandable values supported)
*2 Available regardless of operation mode, operation command source and speed command source.

BINARY VALUE

Object Identifier	Object Name	Present Value Access Type *1	Description
0	Inverter running	R	Represents inverter running (RUN signal) status.
11	Inverter operation ready	R	Represents inverter operation ready (RY signal) status.
98	Alarm output	R	Represents alarm output (LF signal) status.
99	Fault output	R	Represents fault output (ALM signal) status.
200	Inverter running reverse	R	Represents inverter reverse running status.
300	Control input instruction AU	C	Controls the function assigned to terminal AU. Setting 1 of this object turns ON the signal assigned to *Pr. 184 AU terminal function selection*.
301	Control input instruction RT	C	Controls the function assigned to terminal RT. Setting 1 of this object turns ON the signal assigned to *Pr. 183 RT terminal function selection*.
302	Control input instruction RL	C	Controls the function assigned to terminal RL. Setting 1 of this object turns ON the signal assigned to *Pr. 180 RL terminal function selection*.
303	Control input instruction RM	C	Controls the function assigned to terminal RM. Setting 1 of this object turns ON the signal assigned to *Pr. 181 RM terminal function selection*.
304	Control input instruction RH	C	Controls the function assigned to terminal RH. Setting 1 of this object turns ON the signal assigned to *Pr. 182 RH terminal function selection*.
305	Control input instruction JOG *2	C	Controls the function assigned to terminal JOG. Setting 1 of this object turns ON the signal assigned to *Pr. 185 JOG terminal function selection*.
306	Control input instruction MRS	C	Controls the function assigned to terminal MRS. Setting 1 of this object turns ON the signal assigned to *Pr. 187 MRS terminal function selection*.
307	Control input instruction STOP *2	C	Controls the function assigned to terminal STOP. Setting 1 of this object turns ON the signal assigned to *Pr. 188 STOP terminal function selection*.
308	Control input instruction RES *2	C	Controls the function assigned to terminal RES. Setting 1 of this object turns ON the signal assigned to *Pr. 189 RES terminal function selection*.
309	Control input instruction CS *2	C	Controls the function assigned to terminal CS. Setting 1 of this object turns ON the signal assigned to *Pr. 186 CS terminal function selection*.
400	Run/Stop	C	Controls start/stop command. Start command is written after Speed scale is applied. *3 1: Run 0: Stop
401	Forward/Reverse	C	Controls forward/reverse rotation. *3 1: Reverse rotation 0: Forward rotation
402	Fault reset	C	Clears fault output status. (Release of an inverter fault without inverter reset is available.)

*1 R: Read only W: Read/Write (Commandable values not supported) C: Read/Write (Commandable values supported)

*2 The following signals cannot be controlled by the network: Jog operation, automatic restart after instantaneous power failure, start self-holding and reset. Therefore control input instruction JOG, STOP, RES, and CS are invalid in the initial status. When using Control input instruction JOG, STOP, RES, and CS, change the signals with *Pr. 185, Pr. 186, Pr. 188, Pr. 189 (input terminal function selection)*. (*Refer to page 122*) (Reset is available with ReinitializeDevice.)

*3 If communication speed command source is except for NET, the setting value can be written, but not to be applied.

(7) Mailbox parameter/Mailbox value

Access to the properties which are not defined as objects are available by using "Mailbox parameter" and "Mailbox value".
To read a property, write the register of the intended property to "Mailbox parameter", and then read "Mailbox value".
To write a property, write the register of the intended property to "Mailbox parameter", and then write a value to "Mailbox value".

BACnet registers

● System environment variable

Register	Definition	Read/Write	Remarks
40010	Operation mode/ inverter setting	Read/write	For write, set data as the operation mode setting. For read, data is read as the operation mode status. Mode / Read Value / Written Value EXT / H0000 / H0010 * PU / H0001 / H0011 * EXT JOG / H0002 / — PU JOG / H0003 / — NET / H0004 / H0014 PU+EXT / H0005 / — * Writing is available depending on the *Pr. 79* and *Pr. 340* settings. *Refer to page 203* for details. The restrictions depending on the operation mode changes according to the computer link specifications.

●Real-time monitor

Refer to page 141 for details of the monitor description.

Register	Description	Increments
40201	Output frequency/Speed *4	0.01Hz/1
40202	Output current	0.01A/0.1A *1
40203	Output voltage	0.1V
40205	Frequency setting value/Speed setting *4	0.01Hz/1
40206	Running speed	1r/min
40208	Converter output voltage	0.1V
40209	Regenerative brake duty	0.1%
40210	Electronic thermal relay function load factor	0.1%
40211	Output current peak value	0.01A/0.1A *1
40212	Converter output voltage peak value	0.1V
40213	Input power	0.01kW/0.1kW *1
40214	Output power	0.01kW/0.1kW *1
40215	Input terminal status *2	—
40216	Output terminal status *3	—
40217	Load meter	0.1%
40220	Cumulative energization time	1h

Register	Description	Increments
40223	Actual operation time	1h
40224	Motor load factor	0.1%
40225	Cumulative power	1kWh
40250	Power saving effect	Variable
40251	Cumulative saving power	Variable
40252	PID set point	0.1%
40253	PID measured value	0.1%
40254	PID deviation	0.1%
40258	Option input terminal status 1 *5	—
40259	Option input terminal status 2 *6	—
40260	Option output terminal status *7	—
40267	PID measured value 2	0.1%
40277	32-bit cumulative power (lower 16-bit)	1kWh
40278	32-bit cumulative power (upper 16-bit)	1kWh
40279	32-bit cumulative power (lower 16-bit)	0.01kWh/ 0.1kWh *1
40280	32-bit cumulative power (upper 16-bit)	0.01kWh/ 0.1kWh *1

*1 The setting depends on capacities. (FR-F720-02330 (FR-F740-01160) or less/FR-F720-03160 (FR-F740-01800) or more)

*2 Input terminal monitor details

b15															b0
—	—	—	—	CS	RES	STOP	MRS	JOG	RH	RM	RL	RT	AU	STR	STF

*3 Output terminal monitor details

b15															b0
—	—	—	—	—	—	—	—	—	ABC2	ABC1	FU	OL	IPF	SU	RUN

*4 When *Pr.37* = "1 to 9998" or *Pr. 144* = "2 to 10, 102 to 110," the unit is an integral value (one increment). *(Refer to page 139)*

*5 Option input terminal 1 monitor details (input terminal status of FR-A7AX) All OFF if option is not installed.

b15															b0
X15	X14	X13	X12	X11	X10	X9	X8	X7	X6	X5	X4	X3	X2	X1	X0

*6 Option input terminal 2 monitor details (input terminal status of FR-A7AX) All OFF if option is not installed.

b15															b0
—	—	—	—	—	—	—	—	—	—	—	—	—	—	—	DY

*7 Option output terminal monitor details (output terminal status of FR-A7AY) All OFF if option is not installed.

b15															b0
—	—	—	—	—	—	RA3	RA2	RA1	Y6	Y5	Y4	Y3	Y2	Y1	Y0

● Parameter

Parameters	Register	Parameter Name	Read/Write	Remarks
0 to 999	41000 to 41999	Refer to the parameter list *(page 62)* for the parameter names.	Read/write	The parameter number + 41000 is the register number.
C2(902)	41902	Terminal 2 frequency setting bias (frequency)	Read/write	
C3(902)	42092	Terminal 2 frequency setting bias (analog value)	Read/write	The analog value (%) set to *C3 (902)* is read.
	43902	Terminal 2 frequency setting bias (terminal analog value)	Read	The analog value (%) of the voltage (current) applied to the terminal 2 is read.
125(903)	41903	Terminal 2 frequency setting gain (frequency)	Read/write	
C4(903)	42093	Terminal 2 frequency setting gain (analog value)	Read/write	The analog value (%) set to *C4 (903)* is read.
	43903	Terminal 2 frequency setting gain (terminal analog value)	Read	The analog value (%) of the voltage (current) applied to the terminal 2 is read.
C5(904)	41904	Terminal 4 frequency setting bias (frequency)	Read/write	
C6(904)	42094	Terminal 4 frequency setting bias (analog value)	Read/write	The analog value (%) set to *C6 (904)* is read.
	43904	Terminal 4 frequency setting bias (terminal analog value)	Read	The analog value (%) of the current (voltage) applied to the terminal 4 is read.
126(905)	41905	Terminal 4 frequency setting gain (frequency)	Read/write	
C7(905)	42095	Terminal 4 frequency setting gain (analog value)	Read/write	The analog value (%) set to *C7 (905)* is read.
	43905	Terminal 4 frequency setting gain (terminal analog value)	Read	The analog value (%) of the current (voltage) applied to the terminal 4 is read.
C8(930)	41930	Current output bias signal	Read/write	
C9(930)	42120	Current output bias current	Read/write	
C10(931)	41931	Current output gain signal	Read/write	
C11(931)	42121	Current output gain current	Read/write	
C42(934)	41934	PID display bias coefficient	Read/write	
C43(934)	42124	PID display bias analog value	Read/write	The analog value (%) set to *C43 (934)* is read.
	43934	PID display bias analog value (terminal analog value)	Read	The analog value (%) of the current (voltage) applied to the terminal 4 is read.
C44(935)	41935	PID display gain coefficient	Read/write	
C45(935)	42125	PID display gain analog value	Read/write	The analog value (%) set to *C45 (935)* is read.
	43935	PID display gain analog value (terminal analog value)	Read	The analog value (%) of the current (voltage) applied to the terminal 4 is read.

● Faults history

Register	Definition	Read/Write	Remarks
40501	Fault history 1	Read/write	Being 2 bytes in length, the data is stored as "H00○○". Refer to the lowest 1 byte for the fault code. Performing write using the register 40501 batch-clears the faults history. Set any value as data.
40502	Fault history 2	Read	
40503	Fault history 3	Read	
40504	Fault history 4	Read	
40505	Fault history 5	Read	
40506	Fault history 6	Read	
40507	Fault history 7	Read	
40508	Fault history 8	Read	

Fault code list

Data	Description	Data	Description	Data	Description	Data	Description
H00	No fault	H52	ILF	HA6	E.18 *	HC6	SER
H10	OC1	H60	OLT	HA7	E.19 *	HC7	AIE
H11	OC2	H70	BE	HA8	E.20 *	HE4	LCI
H12	OC3	H80	GF	HB0	PE	HE5	PCH
H20	OV1	H81	LF	HB1	PUE	HE6	PID
H21	OV2	H90	OHT	HB2	RET	HF1	E.1
H22	OV3	H91	PTC	HB3	PE2	HF2	E.2
H30	THT	HA0	OPT	HC0	CPU	HF5	E.5
H31	THM	HA1	OP1	HC1	CTE	HF6	E.6
H40	FIN	HA2	OP2	HC2	P24	HF7	E.7
H50	IPF	HA4	E.16 *	HC4	CDO	HFD	E.13
H51	UVT	HA5	E.17 *	HC5	IOH		

* Refer to the FR-F700 PLC function programming manual for details of the PLC function.

● Model information monitor

Register	Definition	Read/Write	Remarks
44001 to 44010	Inverter type	Read	Reading inverter type in ASCII code. "H20" (blank code) is set for blank area Example of FR-F720-NA H46, H52, H2D, H46, H37, H32, H30, H2D, H4E, H41, H20 ..... H20
44011 to 44013	Capacity	Read	Reading inverter capacity in ASCII code. Data is read in increments of 0.1kW, and rounds down to 0.01kW increments "H20" (blank code) is set for blank area Example 0.75K ..... " 7" (H20, H20, H20, H20, H20, H37)

(8) ANNEX A - PROTOCOL IMPLEMENTATION CONFORMANCE STATEMENT (NORMATIVE)

(This annex is part of this Standard and is required for its use.)

BACnet Protocol Implementation Conformance Statement

Date: 1st Aug 2010
Vendor Name: Mitsubishi Electric Corporation
Product Name: Inverter
Product Model Number: FR-F720-NA, FR-F740-NA
Application Software Version: 8290*
Firmware Revision: 1.00
BACnet Protocol Revision: 4

Product Description:

_____
_____
_____

BACnet Standardized Device Profile (Annex L):

☐ BACnet Operator Workstation (B-OWS)
☐ BACnet Building Controller (B-BC)
☐ BACnet Advanced Application Controller (B-AAC)
☒ BACnet Application Specific Controller (B-ASC)
☐ BACnet Smart Sensor (B-SS)
☐ BACnet Smart Actuator (B-SA)

List all BACnet Interoperability Building Blocks Supported (Annex K):

DS-RP-B, DS-WP-B, DM-DDB-B, DM-DOB-B, DM-DCC-B , DM-RD-B

Segmentation Capability:

☐ Segmented requests supportedWindow Size _____
☐ Segmented responses supportedWindow Size _____

Standard Object Types Supported:

An object type is supported if it may be present in the device. For each standard Object Type supported provide the following data:

1) Whether objects of this type are dynamically creatable using the CreateObject service
2) Whether objects of this type are dynamically deletable using the DeleteObject service
3) List of the optional properties supported
4) List of all properties that are writable where not otherwise required by this standard
5) List of proprietary properties and for each its property identifier, datatype, and meaning
6) List of any property range restrictions

Dynamic object creation and deletion is not supported.

Refer to page 250 for the supported object type of FR-F700-NA series.

Data Link Layer Options:

☐ BACnet IP, (Annex J)
☐ BACnet IP, (Annex J), Foreign Device
☐ ISO 8802-3, Ethernet (Clause 7)
☐ ANSI/ATA 878.1, 2.5 Mb. ARCNET (Clause 8)
☐ ANSI/ATA 878.1, RS-485 ARCNET (Clause 8), baud rate(s)_____
☒ MS/TP master (Clause 9), baud rate(s): 9600, 19200, 38400, 76800
☐ MS/TP slave (Clause 9), baud rate(s): _____
☐ Point-To-Point, EIA 232 (Clause 10), baud rate(s):_____
☐ Point-To-Point, modem, (Clause 10), baud rate(s): _____
☐ LonTalk, (Clause 11), medium: _____
☐ Other: _____

Device Address Binding:

Is static device binding supported? (This is currently necessary for two-way communication with MS/TP slaves and certain other devices.) ☐ Yes ☒ No

Networking Options:

☐ Router, Clause 6 - List all routing configurations, e.g., ARCNET-Ethernet, Ethernet-MS/TP, etc.
☐ Annex H, BACnet Tunneling Router over IP
☐ BACnet/IP Broadcast Management Device (BBMD)
Does the BBMD support registrations by Foreign Devices? ☐ Yes ☐ No

Character Sets Supported:

Indicating support for multiple character sets does not imply that they can all be supported simultaneously.
☒ ANSI X3.4 ☐ IBM™/Microsoft™ DBCS ☐ ISO 8859-1
☐ ISO 10646 (UCS-2) ☐ ISO 10646 (UCS-4) ☐ JIS C 6226

If this product is a communication gateway, describe the types of non-BACnet equipment/ networks(s) that the gateway supports:

_____
_____
_____

4.19.9 Operation by PLC function (Pr. 414, Pr. 415, Pr. 498, Pr. 506 to Pr. 515, Pr. 826 to Pr. 865)

I/O data read, write, etc. can be performed by accessing the inverter in the predetermined method using special relays, special registers, etc.
Operation, parameter read/write, etc. can be performed in accordance with the created sequence programs (built in the inverter) using input data from the control input terminals.
With the output signals, output data can be output to outside the inverter from the control output terminals as not only the inverter's status signals but also pilot lamp ON/OFF, interlock and other control signals set freely by the user.

Parameter Number	Name	Initial Value	Setting Range	Description
414 Ver.UP	PLC function operation selection	0	0	PLC function is invalid
			1	PLC function is valid (Inverter reset is necessary to make this setting valid.)
415 Ver.UP	Inverter operation lock mode setting	0	0	The inverter start signal is valid regardless of the sequence program execution key.
			1	The inverter start signal is valid only when the sequence program execution key is set to RUN. When the sequence program execution key is in the STOP position, the inverter does not start if the inverter start signal STF or STR is turned ON. (If the key is switched from RUN to STOP during inverter operation, the inverter is decelerated to a stop.)
498 Ver.UP	PLC function flash memory clear	0	0 to 9999	9696: Flash memory clear
				Other than 9696: Flash memory is not cleared
506 to 515 Ver.UP	Parameter 1 to 10 for user	0	0 to 65535	Inverter parameters *Pr. 506 to Pr. 515, Pr. 826 to Pr. 865* are used as user parameters. Since this parameter area and the devices used with the PLC function, D110 to D159, are accessible to each other, the values set in *Pr. 506 to Pr. 515, Pr. 826 to Pr. 865* can be used in a sequence program. The result of operation performed in the sequence program can also be monitored using *Pr. 506 to Pr. 515, Pr. 826 to Pr. 865*.
826 to 865 Ver.UP	Parameter 11 to 50 for user			

Ver.UP ..... The specification differs according to the manufacture date. *Refer to page 400* and check the SERIAL.

Refer to the FR-F700 PLC function programming manual for details of the PLC function.

4.20 PID control

Purpose	Parameter that must be Set		Refer to Page
Perform process control such as pump and air volume.	**Outline of PID control**	**Pr. 127 to Pr. 134, Pr. 553, Pr. 554, Pr. 575 to Pr. 577**	261
Calibrate the measured value input and PID display coefficient	**Bias and gain calibration for PID displayed values**	**Pr. 241, Pr. 759, C42 (Pr. 934) to C45 (Pr. 935)**	273
Drive a motor at a constant speed before starting to PID control	**Pre-charge function**	**Pr. 760 to Pr. 769**	275
Switch between two PID control settings	**Second PID function**	**Pr. 753 to Pr. 758, Pr. 765 to Pr. 769**	281
Pump function by multiple motors	**Advanced PID function**	**Pr. 554, Pr. 575 to Pr. 591**	283

4.20.1 Outline of PID control (Pr. 127 to Pr. 134, Pr. 241, Pr. 553, Pr. 554, Pr. 575 to Pr. 577)

The inverter can be used to exercise process control, e.g. flow rate, air volume or pressure.
The terminal 2 input signal or parameter setting is used as a set point and the terminal 4 input signal used as a feedback value to constitute a feedback system for PID control.

Parameter Number	Name	Initial Value	Setting Range	Description	
127	**PID control automatic switchover frequency**	9999	0 to 400Hz	Set the frequency at which the control is automatically changed to PID control.	
			9999	Without PID automatic switchover function	
128 Ver.UP	**PID action selection**	10	10, 110 *2	PID reverse action	Deviation value signal input (terminal 1 *4)
			11, 111 *2	PID forward action	
			20, 120 *2	PID reverse action	Measured value (terminal 4 *5) Set point (terminal 2 *4 or *Pr. 133*)
			21, 121 *2	PID forward action	
			50 *2	PID reverse action	Deviation value signal input (LONWORKS, CC-Link, BACnet)
			51 *2	PID forward action	
			60 *2	PID reverse action	Measured value, set point input (LONWORKS, CC-Link, BACnet)
			61 *2	PID forward action	
			70 *6	PID reverse action	Deviation value signal input (PLC function)
			71 *6	PID forward action	
			80 *6	PID reverse action	Measured value, set point input (PLC function)
			81 *6	PID forward action	
			90 *6	PID reverse action	Deviation value signal input (PLC function) (Not applied to the inverter frequency)
			91 *6	PID forward action	
			100 *6	PID reverse action	Measured value, set point input (PLC function) (Not applied to the inverter frequency)
			101 *6	PID forward action	
129 *1	**PID proportional band**	100%	0.1 to 1000%	If the proportional band is narrow (parameter setting is small), the manipulated variable varies greatly with a slight change of the measured value. Hence, as the proportional band narrows, the response sensitivity (gain) improves but the stability deteriorates, e.g. hunting occurs. Gain Kp = 1/proportional band	
			9999	No proportional control	
130 *1	**PID integral time**	1s	0.1 to 3600s	When deviation step is input, time (Ti) is the time required for integral (I) action to provide the same manipulated variable as proportional (P) action. As the integral time decreases, the set point is reached earlier but hunting occurs more easily.	
			9999	No integral control.	
131	**PID upper limit**	9999	0 to 100% *3	Set the upper limit value. If the feedback value exceeds the setting, the FUP signal is output. The maximum input (20mA/5V/10V) of the measured value (terminal 4) is equivalent to 100%.	
			9999	No function	

Parameter Number	Name	Initial Value	Setting Range	Description
132	PID lower limit	9999	0 to 100% *3	Set the lower limit value. If the measured value falls below the setting range, the FDN signal is output. The maximum input (20mA/5V/10V) of the measured value (terminal 4) is equivalent to 100%.
			9999	No function
133 *1	PID action set point	9999	0 to 100% *3	Used to set the set point for PID control.
			9999	Terminal 2 input is the set point.
134 *1	PID differential time	9999	0.01 to 10.00s	When deviation lamp is input, time (Td) is the time required to provide the manipulated variable of only the proportional (P) action. As the differential time increases, greater response is made to a deviation change.
			9999	No differential control.
553 Ver.UP	PID deviation limit	9999	0 to 100.0%*3	Y48 signal is output when the absolute value of deviation amount exceeds the deviation limit value.
			9999	No function
554 Ver.UP	PID signal operation selection	0	0 to 3, 10 to 13	Select the operation to be performed at the detection of upper, lower, and deviation limit for the measured value input. The operation for PID output suspension function can be selected.
575	Output interruption detection time	1s	0 to 3600s	The inverter stops operation if the output frequency after PID operation remains at less than the *Pr. 576* setting for longer than the time set in *Pr. 575*.
			9999	Without output interruption function
576	Output interruption detection level	0Hz	0 to 400Hz	Set the frequency at which the output interruption processing is performed.
577	Output interruption cancel level	1000%	900 to 1100%	Set the level (*Pr. 577* minus 1000%) to release the PID output interruption function.

The above parameters can be set when *Pr. 160 User group read selection* = "0". *(Refer to page 190)*

Ver.UP … Specifications differ according to the date assembled. *Refer to page 400* to check the SERIAL number.

*1 The above parameters allow its setting to be changed during operation in any operation mode even if "0" (initial value) is set in *Pr. 77 Parameter write selection*.

*2 PID control is available without turning X14 signal ON when *Pr.128* = "50, 51, 60, 61, 110, 111, 120, 120".

*3 Setting values of *Pr.131 to Pr.133, Pr.553, Pr.577* are without unit when "9999" is set to both of *C42(Pr.934)* and *C44(Pr.935)*. (The values set to *Pr.553* and *Pr.577* indicate deviation range whether the unit is % or is not indicated.)

*4 Input specification for the terminals are determined by *Pr.73 Analog input selection*.

*5 Input specification for the terminal is determined by *Pr.267 Terminal 4 input selection*.

*6 Refer to the FR-F700 PLC function programming manual for details of the PLC function.

(1) PID control basic configuration

· *Pr. 128 (Pr. 753)* = "10, 11, 110, 111" (Deviation value signal input)

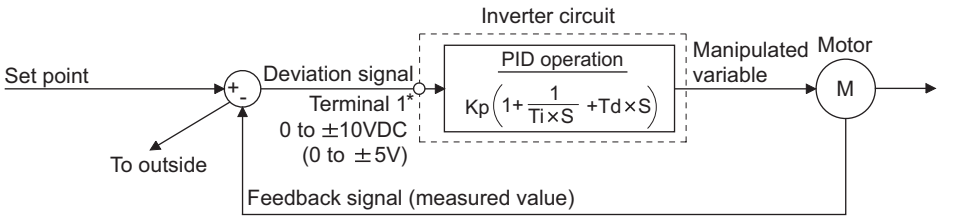

Kp: Proportionality constant Ti: Integral time S: Operator Td: Differential time

· *Pr. 128 (Pr. 753)* = "20, 21, 120, 121" (Measured value input)

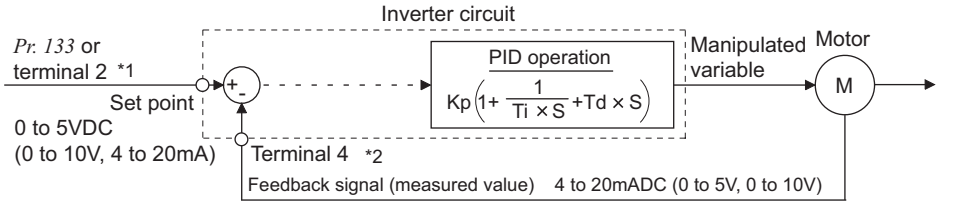

Kp: Proportionality constant Ti: Integral time S: Operator Td: Differential time

(2) PID action overview

1) PI action

A combination of P action (P) and I action (I) for providing a manipulated variable in response to deviation and changes with time.

[Operation example for stepped changes of measured value]

(Note) PI action is the sum of P and I actions.

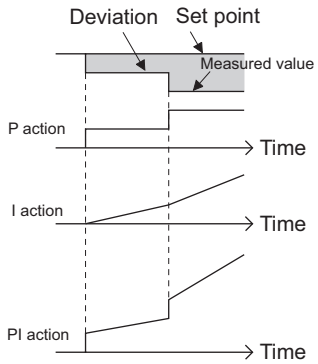

2) PD action

A combination of P action (P) and differential control action (D) for providing a manipulated variable in response to deviation speed to improve the transient characteristic.

[Operation example for proportional changes of measured value]

(Note) PD action is the sum of P and D actions.

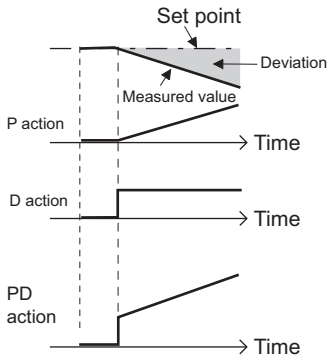

3) PID action

The PI action and PD action are combined to utilize the advantages of both actions for control.

(Note) PID action is the sum of P, I and D actions.

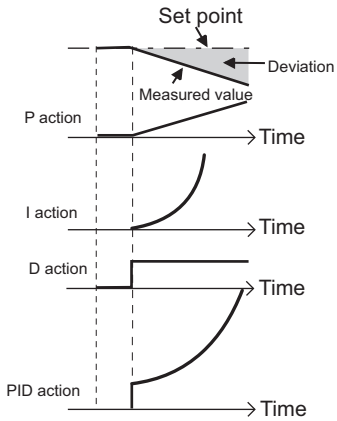

4)Reverse action

Increases the manipulated variable (output frequency) if deviation X = (set point - measured value) is positive, and decreases the manipulated variable if deviation is negative.

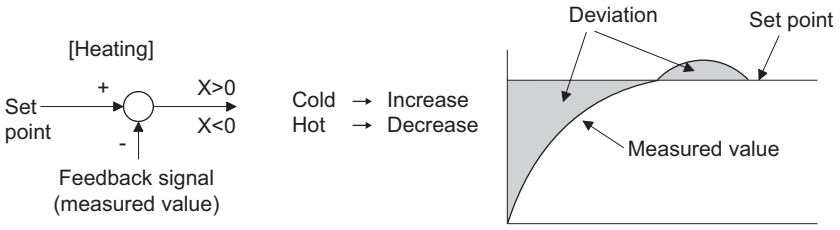

5)Forward action

Increases the manipulated variable (output frequency) if deviation X = (set point - measured value) is negative, and decreases the manipulated variable if deviation is positive.

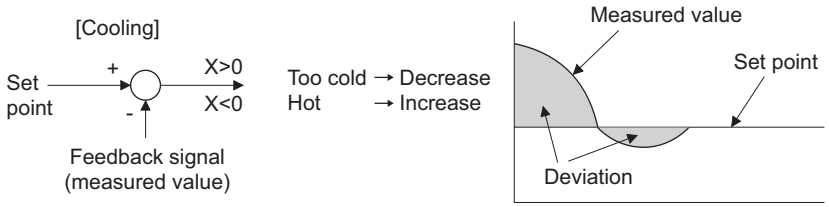

Relationships between deviation and manipulated variable (output frequency)

	Deviation	
	Positive	Negative
Reverse action	↗	↘
Forward action	↘	↗

(3) Connection diagram

· Sink logic
· *Pr. 128* = 20
· *Pr. 183* = 14
· *Pr. 191* = 47
· *Pr. 192* = 16
· *Pr. 193* = 14
· *Pr. 194* = 15

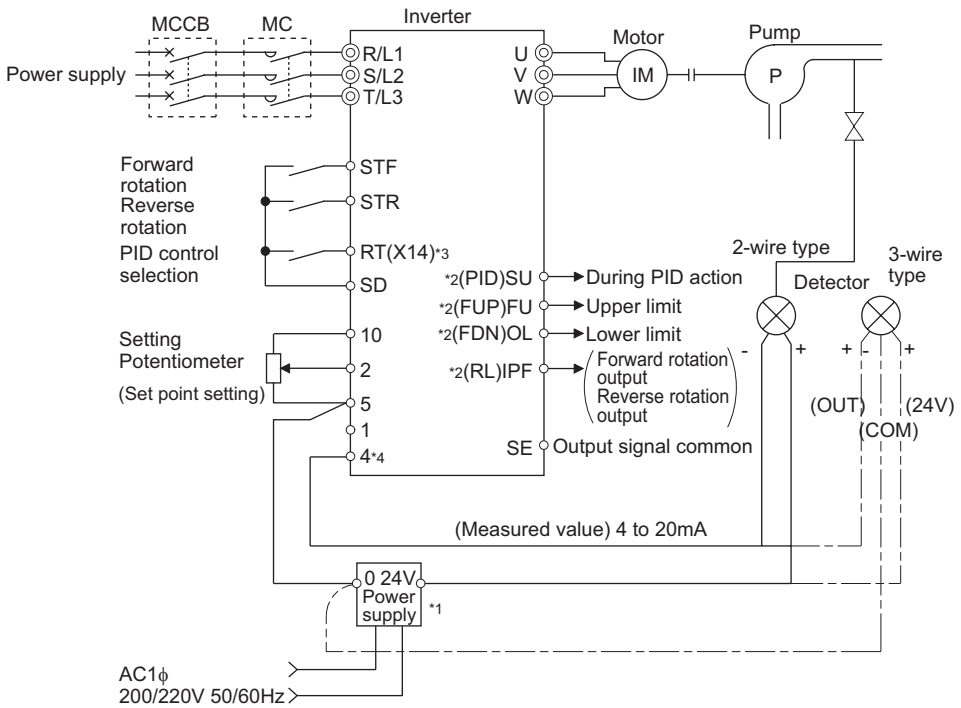

*1 The power supply must be selected in accordance with the power specifications of the detector used.
*2 The used output signal terminal changes depending on the *Pr. 190 to Pr. 196 (output terminal selection)* setting.
*3 The used input signal terminal changes depending on the *Pr. 178 to Pr. 189 (input terminal selection)* setting.
*4 The AU signal need not be input.

(4) I/O signals and parameter setting

- Turn ON the X14 signal to perform PID control. When this signal is OFF, PID action is not performed and normal inverter operation is performed. (However, turning X14 ON is not necessary when *Pr.128* = "50, 51, 60, 61, 110, 111, 120, 121".)
- Enter the set point across inverter terminals 2-5 or into *Pr. 133* and enter the measured value signal across inverter terminals 4 and 5. At this time, set any of "20, 21, 120, 121" in *Pr. 128*.
- When entering the externally calculated deviation signal, enter it across terminals 1 and 5. At this time, set any of "10, 11, 110, 111" in *Pr. 128*.

● Input signals

	Signal	Terminal Used	Function	Description	Parameter Setting
Input	X14	Depending on *Pr. 178 to Pr. 189*	PID control selection	Turn ON X14 to perform PID control.	Set 14 in any of *Pr. 178 to Pr. 189*.
	X64		PID forward/ reverse action switchover	By turning ON X64, forward action can be selected for PID reverse action (*Pr. 128* = 10, 20, 110, 120), and reverse action for forward action (*Pr. 128* = 11, 21, 111, 121).	Set 64 in any of *Pr. 178 to Pr. 189*.
	X72		PID integral value reset	ON: Integral and differential values are reset OFF: Normal processing	Set 72 in any of *Pr. 178 to Pr. 189*.
	X77		Pre-charge end command	Turn ON X77 to end the pre-charge operation and start PID control.	Set 77 in any of *Pr. 178 to Pr. 189*.
	X78		Second pre-charge end command	Turn ON X78 while RT is ON to end the pre-charge operation and start PID control.	Set 78 in any of *Pr. 178 to Pr. 189*.
	2	2	Set point input	Enter the set point for PID control.	*Pr. 128* = 20, 21, 120, 121 *Pr. 133* =9999
				0 to 5V.....0 to 100%	*Pr. 73* = 1 *1, 3, 5, 11, 13, 15
				0 to 10V.....0 to 100%	*Pr. 73* = 0, 2, 4, 10, 12, 14
				0 to 20mA.....0 to 100%	*Pr. 73* = 6, 7, 16, 17
	PU	—	Set point input	Set the set value *(Pr. 133)* from the operation panel or parameter unit.	*Pr. 128* = 20, 21, 120, 121 *Pr. 133* = 0 to 100%
	1	1	Deviation signal input	Input the deviation signal calculated externally.	*Pr. 128* = 10 *1, 11, 110, 111
				-5V to +5V.....-100% to +100%	*Pr. 73* = 2, 3, 5, 7, 12, 13, 15, 17
				-10V to +10V.....-100% to +100%	*Pr. 73* = 0, 1 *1, 4, 6, 10, 11, 14, 16
	4	4	Measured value input	Input the signal from the detector (measured value signal).	*Pr. 128* = 20, 21, 120, 121
				4 to 20mA.....0 to 100%	*Pr. 267* = 0 *1
				0 to 5V.....0 to 100%	*Pr. 267* = 1
				0 to 10V.....0 to 100%	*Pr. 267* = 2
	Communi-cation *2	—	Deviation value input	Input the deviation value from LONWORKS, CC-Link, or BACnet communication.	*Pr. 128* = 50, 51
			Set value, measured value input	Input the set value and measured value from LONWORKS , CC-Link, or BACnet communication.	*Pr. 128* = 60, 61
	PLC	—	Deviation value input	Input the deviation value from PLC function.	*Pr. 128* = 70, 71, 90, 91
			Set value, measured value input	Input the set value and measured value from PLC function.	*Pr. 128* = 80, 81, 100, 101

*1 The shaded area indicates the parameter initial value.

*2 When *Pr. 128* = "50, 51, 60, 61" and the operation mode is not NET, input method is same as when *Pr. 128* = "10, 11, 20, 21" respectively. Input from BACnet communication is available when the operation mode is NET, Pr. 549 = "2" (BACnet), and RS-485 terminal has the command source. Input from LonWorks or CC-Link communication is available when BACnet communication is inactive and the operation mode is NET.
For the setting method via LONWORKS communication, refer to the LONWORKS communication option (FR-A7NL) instruction manual.
For the setting method via CC-Link communication, refer to the CC-Link communication option (FR-A7NC) instruction manual.
For the setting method via BACnet communication, *refer to page 247.*

● Output signals

Signal		Terminal Used	Function	Description	Parameter Setting
Output	FUP	Depending on *Pr. 190 to Pr. 196*	Upper limit output	Output to indicate that the measured value signal exceeded the upper limit value *(Pr. 131)*.	*Pr. 128* =20, 21, 60, 61, 120, 121 *Pr. 131* ≠ 9999 Set 15 or 115 in any of *Pr. 190 to Pr. 196*. *1
	FDN		Lower limit output	Output when the measured value signal falls below the lower limit *(Pr. 132)*.	*Pr. 128* =20, 21, 60, 61, 120, 121 *Pr. 132* ≠ 9999 Set 14 or 114 in any of *Pr. 190 to Pr. 196*. *1
	RL		Forward (reverse) rotation direction output	"Hi" is output to indicate that the output indication of the parameter unit is forward rotation (FWD), and "Low" to indicate that it is reverse rotation (REV) or stop (STOP).	Set 16 or 116 in any of *Pr. 190 to Pr. 196*. *1
	PID		During PID control activated	Turns ON during PID control.	Set 47 or 147 in any of *Pr. 190 to Pr. 196*. *1
	SLEEP		PID output interruption	Turns ON when the PID output interruption function is performed.	*Pr. 575* ≠ 9999 Set 70 or 170 in any of *Pr. 190 to Pr. 196*. *1
	Y48		PID deviation limit	Output when the absolute value of deviation exceeds the limit value.	*Pr. 553* ≠ 9999 Set 48 or 148 in any of *Pr. 190 to Pr. 196*. *1
	Y49		During pre-charge operation	Output during the pre-charge operation	Set 49 or 149 in any of *Pr. 190 to Pr. 196*. *1
	Y50		During second pre-charge operation		Set 50 or 150 in any of *Pr. 190 to Pr. 196*. *1
	Y51		Pre-charge time over	Output when the pre-charged time exceeds the time set in *Pr.764* or *Pr.769*.	Set 51 or 151 in any of *Pr. 190 to Pr. 196*. *1
	Y52		Second pre-charge time over		Set 52 or 152 in any of *Pr. 190 to Pr. 196*. *1
	Y53		Pre-charge level over	Output when the pre-charged amount exceeds the set level in *Pr.763* or *Pr.768*.	Set 53 or 153 in any of *Pr. 190 to Pr. 196*. *1
	Y54		Second pre-charge level over		Set 54 or 154 in any of *Pr. 190 to Pr. 196*. *1
	SE	SE	Output terminal common	Common terminal for terminals assigned to FUP signal, FDN signal, RL signal, PID signal, SLEEP signal, and Y48 signal	

*1 When 100 or larger value is set to any of *Pr. 190 to Pr. 196 (output terminal function selection)*, the terminal output has negative logic. *(Refer to page 128 for details)*

CAUTION

· Changing the terminal function using any of *Pr. 178 to Pr. 189, 190 to Pr. 196* may affect the other functions. Please set parameters after confirming the function of each terminal.

(5) PID control automatic switchover control *(Pr. 127)*

- The inverter can be started up without PID control mode only at a start.
- When the frequency is set to *Pr. 127 PID control automatic switchover frequency* within the range 0 to 400Hz, the system starts up without PID operation from a start until output frequency is reached *Pr. 127*, and then it shifts to PID control operation mode. Once the system has entered PID control operation, it continues PID control if the output frequency falls to or below *Pr. 127*.

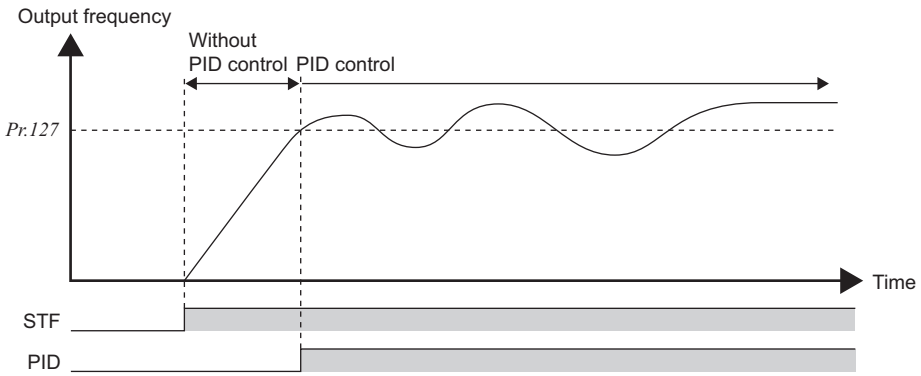

(6) Selecting operation to be performed at the output of Upper limit signal, Lower limit signal, and PID deviation limit signal (FUP signal, FDN signal, Y48 signal, *Pr.554*)

You can select the operation to be performed at the detection of upper, lower and deviation limit for the measured value input. With *Pr. 554 PID signal operation selection*, signal output or signal output + alarm stop (E.PID) can be selected for each of upper limit output signal (FUP signal), lower limit output signal (FDN signal), and PID deviation limit signal (Y48 signal).

Pr. 554 Setting	FUP Signal, FDN Signal *	Y48 Signal *	SLEEP Function
0 (Initial value)	Only signal output	Only signal output	Inverter coasts to a stop at the start of SLEEP operation
1	Signal output + stop by fault (E.PID)		
2	Only signal output	Signal output + stop by fault (E.PID)	
3	Signal output + stop by fault (E.PID)		
10	Only signal output	Only signal output	Inverter decelerates to a stop at the start of SLEEP operation
11	Signal output + stop by fault (E.PID)		
12	Only signal output	Signal output + stop by fault (E.PID)	
13	Signal output + stop by fault (E.PID)		

* When the settings for *Pr.131 PID upper limit*, *Pr.132 PID lower limit*, and *Pr.553 PID deviation limit*, which corresponds with FUP, FDN, and Y48 signals, are "9999" (no function), the signal is not output, or the alarm stop is not performed.

(7) PID output suspension function (SLEEP function) (SLEEP signal, *Pr. 554*, *Pr. 575 to Pr. 577*)

- The inverter stops operation if the output frequency after PID control remains at less than the *Pr. 576 Output interruption detection level* setting for longer than the time set in *Pr. 575 Output interruption detection time*. (At this time, if "0 to 3" is set to *Pr. 554 PID signal operation selection*, output is shut off (the inverter coasts to stop) when SLEEP operation starts. If "10 to 13" is set, the inverter decelerates to a stop in the deceleration time set in *Pr.8* when SLEEP operation starts.)
  This function can reduce energy consumption in the low-efficiency, low-speed range.

Pr.554 Setting	SLEEP Function	FUP Signal, FDN Signal	Y48 Signal
0 (Initial value)	Inverter coasts to a stop at the start of SLEEP operation	Only signal output	Only signal output
1		Signal output + stop by fault (E.PID)	
2		Only signal output	Signal output + stop by fault (E.PID)
3		Signal output + stop by fault (E.PID)	
10	Inverter decelerates to a stop at the start of SLEEP operation	Only signal output	Only signal output
11		Signal output + stop by fault (E.PID)	
12		Only signal output	Signal output + stop by fault (E.PID)
13		Signal output + stop by fault (E.PID)	

- When the deviation (= set value - measured value) reaches the PID output shutoff cancel level (*Pr. 577* setting - 1000%) while the PID output suspension function is ON, the PID output suspension function is canceled and PID control operation is resumed automatically.
- While the PID output suspension function is ON, the PID output suspension signal (SLEEP) is output. At this time, the inverter running signal (RUN) is OFF and the PID control operating signal (PID) is ON.
- For the terminal used for the SLEEP signal output, assign the function by setting "70" (positive logic) or "170" (negative logic) in *Pr. 190 to Pr. 196 (output terminal function selection)*.

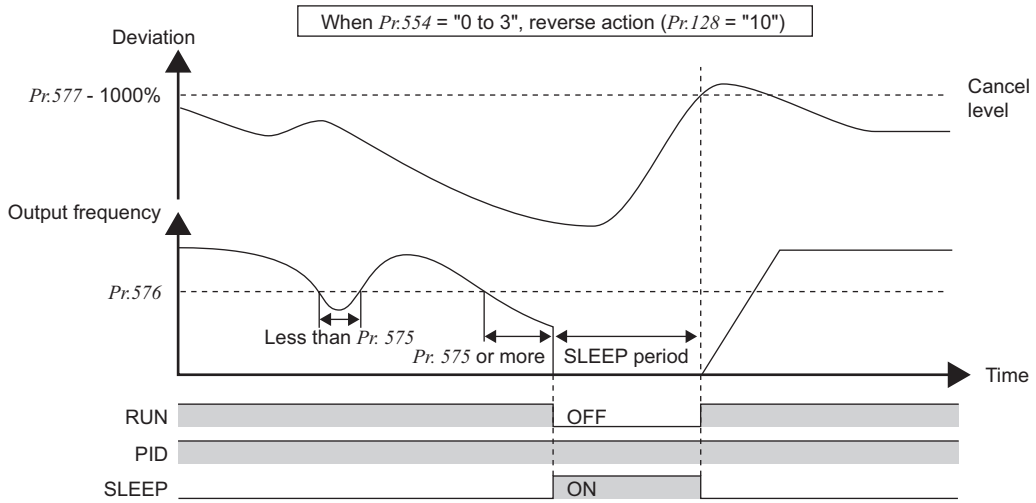

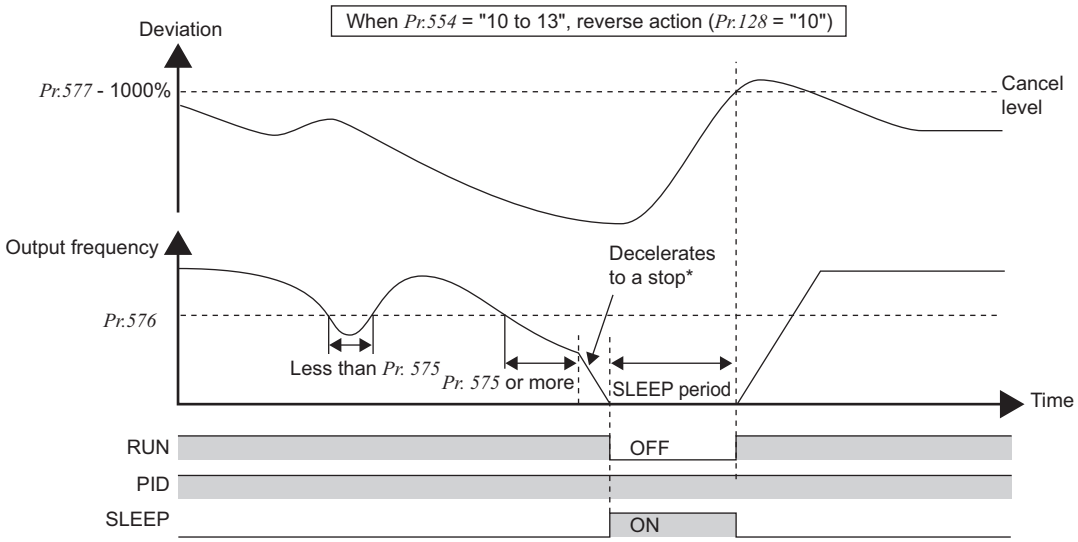

* When the output rises to the output interruption cancel level during deceleration to a stop, output interruption gets cancelled, and the inverter accelerates again to continue PID control. *Pr.576 Output interruption detection level* is invalid during deceleration.

(8) PID monitor function

- The PID control set value, measured value and deviation value can be displayed on the operation panel and output from terminal CA, AM.
- Integral value indicating a negative % can be displayed on the deviation monitor. 0% is displayed as 1000. (The deviation monitor cannot be output from the terminal CA, AM.)
- For the monitors, set the following values in *Pr. 52 DU/PU main display data selection*, *Pr. 54 CA terminal function selection*, and *Pr. 158 AM terminal function selection*.

Setting	Monitor Description	Minimum Increments*	Terminal CA, AM Full Scale*	Remarks
52	**PID set point**	0.1	100%/*C42(Pr.934)* or *C44(Pr.935)*	For deviation input (*Pr. 128* = 10, 11, 110, 111), the monitor value is always displayed as 0. For the setting value "67", monitoring is available even when PID control is inactive.
53	**PID measured value**			
67	**PID measured value 2**			
54	**PID deviation**	0.1	—	Value cannot be set to *Pr. 54 or Pr. 158*. The PID deviation value of 0% is displayed as 1000.

* When neither of *C42(Pr.934)* nor *C44(Pr.935)* setting is "9999", minimum increment changes from % to no unit, and the full scale value for terminal CA/AM changes from 100% to the larger value between *C42(Pr.934) PID display bias coefficient* and *C44(Pr.935) PID display gain coefficient*. (The smaller value between *C42(Pr.934)* and *C44(Pr.935)* becomes the minimum value.)

(9) Adjustment procedure

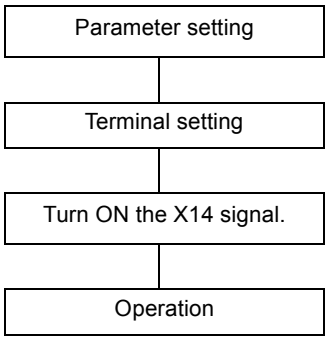

Adjust the PID control parameters, *Pr. 127 to Pr. 134*, *Pr. 553, Pr. 554, and Pr. 575 to Pr. 577*.

Set the I/O terminals for PID control. *(Pr. 178 to Pr. 189 (Input terminal function selection), Pr. 190 to Pr. 196 (output terminal function selection))*

PID control is available without turning X14 signal ON when *Pr.128* = "50, 51, 60, 61, 110, 111, 120, 121".

(10) Calibration example

(A detector of 4mA at 0°C and 20mA at 50°C is used to adjust the room temperature to 25°C under PID control. The set point is given to across inverter terminals 2 and 5 (0 to 5V).)

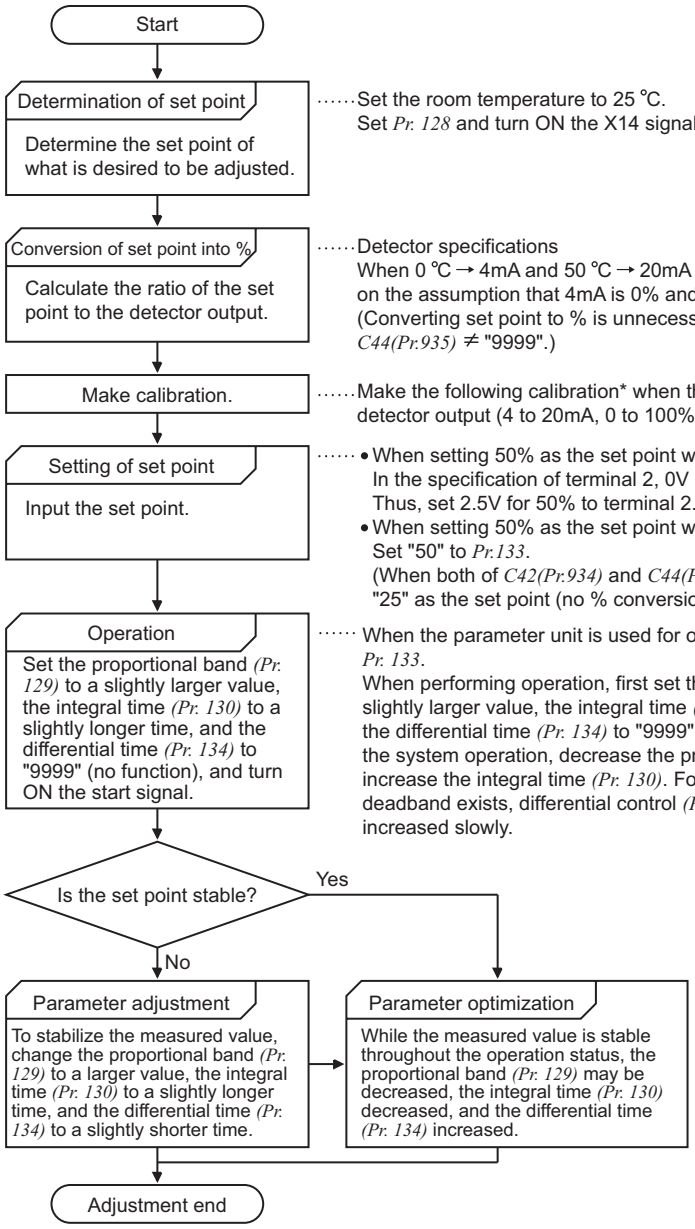

* When calibration is required
To perform calibration for detector output and set point input, set calibration parameters *Pr. 902* and *Pr. 903* (terminal 2), or *Pr. 904* and *Pr. 905* (terminal 4). However, use *Pr. 934* and *Pr. 935* instead of *Pr. 904* and *Pr. 905* when both of *C42 (Pr. 934)* and *C44(Pr. 935)* ≠ "9999". Make calibration in the PU mode during an inverter stop.
(For the details of *Pr. 902* to *Pr. 905*, refer to page *177*. For the details of *Pr. 934* and *Pr. 935*, refer to page *271*.)

<Set point input calibration>

1) Setting with terminal 2 input

1. Apply the input voltage of 0% set point setting (e.g. 0V) across terminals 2 and 5.
2. Enter in *C2 (Pr. 902)* the frequency which should be output by the inverter at the deviation of 0% (e.g. 0Hz).
3. In *C3 (Pr. 902)*, set the voltage value at 0%.
4. Apply the voltage of 100% set point (e.g. 5V) to across terminals 2 and 5.
5. Enter in *Pr. 125* the frequency which should be output by the inverter at the deviation of 100% (e.g. 60Hz).
6. In *C4 (Pr. 903)*, set the voltage value at 100%.

2) Setting with *Pr. 133*

When both or one of *C42 (Pr. 934) and C44 (Pr. 935)* is "9999".
For the set point, set a % converted value in the range of 0 to 100%.

When both of *C42 (Pr. 934) and C44 (Pr. 935)* ≠ "9999".
For the set point, set PID coefficient, which corresponds with 0 to 100%.

<Measured value calibration>

1) When both or one of *C42 (Pr.934)* and *C44 (Pr.935)* is "9999".

1. Apply the input current of 0% measured value (e.g. 4mA) across terminals 4 and 5.
2. Make calibration using *C6 (Pr. 904)*.
3. Apply the input current of 100% measured value (e.g. 20mA) across terminals 4 and 5.
4. Make calibration using *C7 (Pr. 905)*.

2) When both of *C42 (Pr.934)* and *C44 (Pr.935)* ≠ "9999".

1. Apply the input current of 0% measured value (e.g. 4mA) across terminals 4 and 5.
2. Set PID display value at 0% measured value (example: 15(°C)) to *C42 (Pr. 934)* , and calibrate *C43 (Pr. 934)*.
3. Apply the input current of 100% measured value (e.g. 20mA) across terminals 4 and 5.
4. Set PID display value at 100% measured value (example: 35(°C)) to *C44 (Pr. 935)*, and calibrate *C45 (Pr. 935)*.

REMARKS

- The frequency set in *C5 (Pr. 904)* and *Pr. 126* should be the same as set in *C2 (Pr. 902)* and *Pr. 125*.

The results of the above calibration are as shown below:

Pr. 133 Setting	*Pr. 934, Pr. 935* Setting	Set Point Setting	Measured Value (Terminal 4)	Manipulated Variable
9999	—	(Terminal 2) 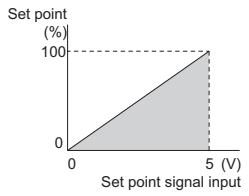	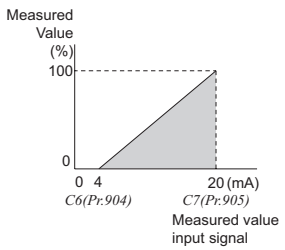	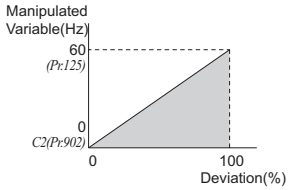
Other than 9999	Both or one is 9999	(Pr.133) 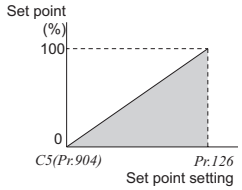		
	Other than 9999	(Pr.133) 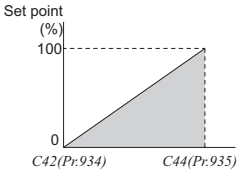 Set PID coefficient corresponding with 0 to 100%.	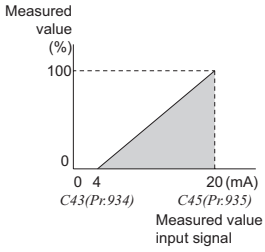	

CAUTION

- If the multi-speed (RH, RM, RL signal) or Jog operation (JOG signal) is entered with the X14 signal ON, PID control is stopped and multi-speed or Jog operation is started.
- If the setting is as follows, PID control becomes invalid.
  Pr. 22 Stall prevention operation level = "9999" (analog variable)
  Pr. 79 Operation mode selection = "6" (switchover mode))
- When the *Pr. 128* setting is "20, 21, 120, 121", note that the input across inverter terminals 1 and 5 is added to the set value across terminals 2 and 5.
- Changing the terminal function using any of *Pr. 178 to Pr. 189, Pr. 190 to Pr. 196* may affect the other functions. Please set parameters after confirming the function of each terminal.
- When PID control is selected, the minimum frequency is the frequency set in *Pr. 902* and the maximum frequency is the frequency set in *Pr. 903*. (*Pr. 1 Maximum frequency* and *Pr. 2 Minimum frequency* settings are also valid.)
- The remote operation function is invalid during PID operation.
- When the control is switched to PID control during normal operation, the frequency command value calculated by PID operation using 0Hz as standard is used without the frequency during the operation.

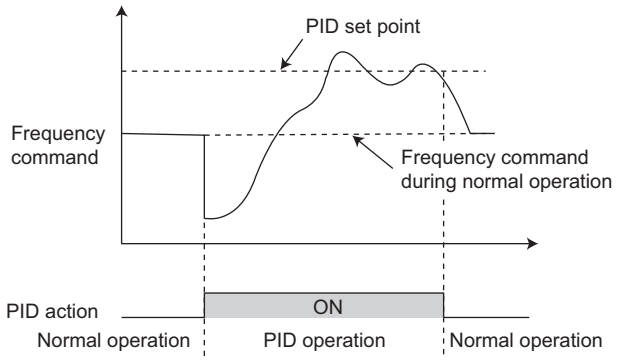

Operation when control is switched to PID control during normal operation

4.20.2 Bias and gain calibration for PID displayed values (Pr. 241, Pr. 759, C42(Pr. 934) to C45(Pr. 935))

- When both of *C42(Pr. 934)* and *C44(Pr. 935)* ≠ "9999", bias/gain calibration is available for analog value of set point, measured value, deviation value to perform PID control.
- "Bias" / "gain" function can adjust the relation between PID displayed coefficient and measured value input signal. Examples of measured value input signals are 0 to 5VDC, 0 to 10VDC, or 4 to 20mADC, and they are externally input.

Parameter Number	Name	Initial Value	Setting Range	Description	
241 *1	Analog input display unit switchover	0	0	Displayed in %	Select the unit of analog input display.
			1	Displayed in V/mA	
759 *1 Ver.UP	PID unit selection	9999	0 to 43, 9999	This parameter changes unit of parameters and monitored items that are related to PID control. *Refer to page 320*.	
C42 (934) *2 Ver.UP	PID display bias coefficient	9999	0 to 500.00	Set the coefficient on bias (minimum) side of terminal 4 input.	
			9999	Displayed in %.	
C43 (934) *2 Ver.UP	PID display bias analog value	20%	0 to 300.0%	Set the converted % on bias (minimum) side current /voltage of terminal 4 input.	
C44 (935) *2 Ver.UP	PID display gain coefficient	9999	0 to 500.00	Set the coefficient on gain (maximum) side of the terminal 4 input.	
			9999	Displayed in %.	
C45 (935) *2 Ver.UP	PID display gain analog value	100%	0 to 300.0%	Set the converted % on gain (maximum) side of current/ voltage of terminal 4 input.	

The above parameters can be set when *Pr. 160 User group read selection* = "0". *(Refer to page 190)*

Ver.UP … Specifications differ according to the date assembled. *Refer to page 400* to check the SERIAL number.

*1 The above parameters allow its setting to be changed during operation in any operation mode even if "0" (initial value) is set in *Pr. 77 Parameter write selection*.

*2 The parameter number in parentheses is the one for use with the parameter unit (FR-PU04/FR-PU07(-01)).

(1) Calibration for PID displayed values (C42(Pr. 934) to C45(Pr. 935))

- Set PID display bias coefficient for terminal 4 input with *C42(Pr. 934)*.
  (Initial value is the coefficient for 4mA.)
- Set PID display gain coefficient for 20mA of the frequency command current (4 to 20mA) with *C44(Pr. 935)*.
- When both of *C42(Pr. 934)* and *C44(Pr. 935)* ≠ "9999" and *Pr.133* is set as the set point, the setting of *C42(Pr. 934)* is treated as 0%, and *C44(Pr. 935)* as 100%.

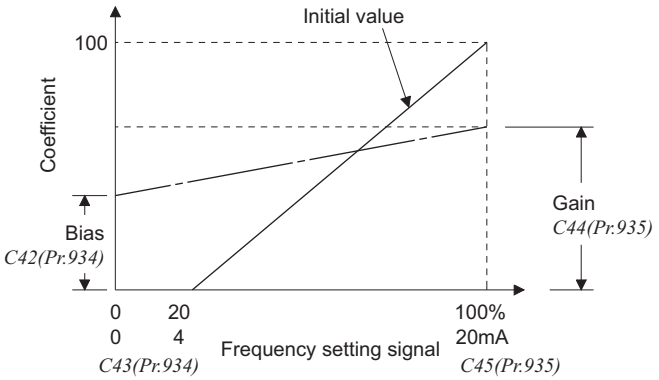

- Three methods of bias/gain adjustment for PID displayed values are the following.
  (a)Method to adjust any point by application of voltage (current) across the terminals 4 and 5.
  (b)Method to adjust any point without application of voltage (current) across terminals 4 and 5.
  (c)Method to adjust only the frequency without adjusting the voltage (current).
  (For the detail of (a) to (c), *refer to page 177*.
  Make adjustment by assuming *C7 (Pr. 905)* as *C45 (Pr. 935)*, and *Pr. 126* as *C44 (Pr. 935)*.)

CAUTION

- When the voltage/current input specifications are changed with voltage/current input switch and using *Pr. 73* and *Pr. 267*, be sure to make calibration.

- Take caution when the following condition is satisfied because the inverter recognizes the deviation value as a negative (positive) value even though a positive (negative) deviation is given:
  Pr. 934 PID display bias coefficient > *Pr. 935 PID display gain coefficient*
  To perform a reverse operation, set the forward operation in *Pr. 128 PID action selection*. To perform a forward operation, set the reverse operation in *Pr. 128*. In this case, the PID output shutoff release level is (1000 - *Pr. 577*).

Pr. 934 < *Pr. 935* **(normal setting)**		*Pr. 934* ≥ *Pr. 935*	
Reverse operation	Reverse operation setting to *Pr. 128*	Reverse operation	Forward operation setting to *Pr. 128*
Forward operation	Forward operation setting to *Pr. 128*	Forward operation	Reverse operation setting to *Pr. 128*
PID output shutoff release level	*Pr. 577* - 1000	PID output shutoff release level	1000 - *Pr. 577*

(Example) Set the following: *Pr. 934* = "500" or 20% (4mA is applied), *Pr. 935* = "100" or 100% (20mA is applied).
When the set point=400 and the measured value=360, the deviation is +40 (>0), but the inverter recognizes the deviation with -10% (<0). Because of this, operation amount does not increase in the reverse operation setting.
The operation amount increases when the forward operation is set.
To perform PID output shutoff release at deviation of +40 or higher, set *Pr. 577* = "960."

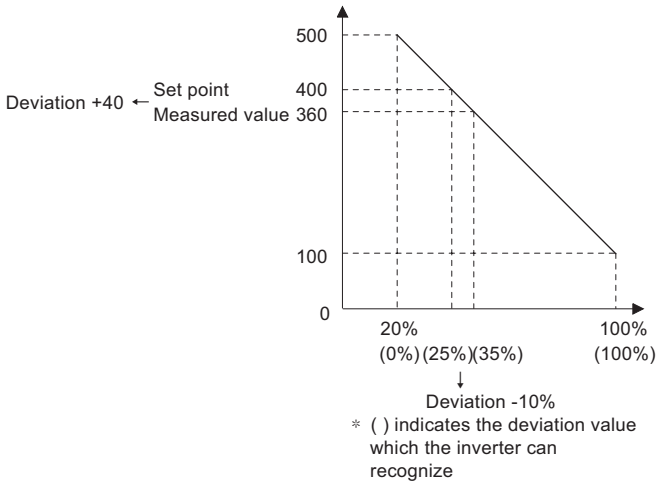

(2) Analog input display unit changing *(Pr. 241)*

- You can change the analog input display unit (%/V, mA) for analog input bias/gain calibration.
- Depending on the terminal input specification set to *Pr. 73*, *Pr. 267*, and voltage/current input switch the display units of *C3(Pr. 902), C4(Pr. 903), C43(Pr. 934), C45(Pr. 935)* change as shown below.

Analog Command (Terminal 4) (according to *Pr. 73*, *Pr. 267*, and Voltage/Current Input Switch)	***Pr. 241* = 0 (Initial Value)**	***Pr. 241* = 1**
0 to 5V input	0 to 5V → displayed in 0 to 100%(0.1%).	0 to 100% → displayed in 0 to 5V(0.01V).
0 to 10V input	0 to 10V → displayed in 0 to 100%(0.1%).	0 to 100% → displayed in 0 to 10V(0.01V).
4 to 20mA input	0 to 20mA → displayed in 0 to 100%(0.1%).	0 to 100% → displayed in 0 to 20mA(0.01mA).

4.20.3 Pre-charge function (Pr.760 to Pr. 769)

This function is to drive the motor at a certain speed before starting PID control. The motor is operated at *Pr. 127 PID control automatic switchover frequency* at start until a pre-charge ending condition is satisfied. PID control starts after a pre-charge ending condition is satisfied. (This function is useful for a pump with a long hose. Without this function, PID control would start before the pump is filled with water, and proper control would not be performed.) Pre-charge function is also valid for a start after the PID output suspension (SLEEP). PID output suspension (SLEEP) function is not performed until the pre-charge operation ends.

Parameter Number	Name	Initial Value	Setting Range	Description
760 Ver.UP	Pre-charge fault selection	0	0	When the pre-charged amount exceeds *Pr. 763* or the pre-charged time exceeds *Pr. 764*, the output is immediately shutoff, and the fault (E.PCH) is output.
			1	When the pre-charged amount exceeds *Pr. 763* or the pre-charged time exceeds *Pr. 764*, the motor decelerates to stop, and the fault (E.PCH) is output.
761 Ver.UP	Pre-charge ending level	9999	0 to 100% *1	Set the measurement level to end the pre-charge operation.
			9999	Without pre-charge ending level
762 Ver.UP	Pre-charge ending time	9999	0.0 to 3600s	Set the time to end the pre-charge operation.
			9999	Without pre-charge ending time
763 Ver.UP	Pre-charge upper detection level	9999	0 to 100% *1	Set the upper limit for the pre-charged amount. If the pre-charged amount exceeds the set level, the fault (E.PCH) is output.
			9999	Without pre-charge upper detection level
764 Ver.UP	Pre-charge time limit	9999	0.0 to 3600s	Set the time limit for the pre-charge operation. If the pre-charged time exceeds the set level, the fault (E.PCH) is output.
			9999	Without pre-charge time limit
765 Ver.UP	Second pre-charge fault selection	0	0	When the pre-charged amount exceeds *Pr. 768* or the pre-charged time exceeds *Pr. 769* while the RT signal is ON, the fault (E.PCH) is output.
			1	When the pre-charged amount exceeds *Pr. 768* or the pre-charged time exceeds *Pr. 769* while the RT signal is ON, the motor decelerates to stop, and the fault (E.PCH) is output.
766 Ver.UP	Second pre-charge ending level	9999	0 to 100% *1	Set the measurement level to end the pre-charge operation, which is performed while the RT signal is ON.
			9999	Without second pre-charge ending level
767 Ver.UP	Second pre-charge ending time	9999	0.0 to 3600s	Set the time to end the pre-charge operation, which is performed while the RT signal is ON.
			9999	Without second pre-charge ending time
768 Ver.UP	Second pre-charge upper detection level	9999	0 to 100% *1	Set the upper limit for the pre-charged amount, which is charged while the RT signal is ON. If the pre-charged amount exceeds the set level, the fault (E.PCH) is output.
			9999	Without second pre-charge ending level
769 Ver.UP	Second pre-charge time limit	9999	0.0 to 3600s	Set the time limit for the pre-charge operation, which is performed while the RT signal is ON. If the pre-charged time exceeds the set level, the fault (E.PCH) is output.
			9999	Without second pre-charge time limit

The above parameters can be set when *Pr. 160 User group read selection* = "0". *(Refer to page 190)*

Ver.UP … Specifications differ according to the date assembled. *Refer to page 400* to check the SERIAL number.

*1 Setting values of *Pr. 761, Pr. 763, Pr. 766, Pr. 768* are without unit when "9999" is set to both of *C42(Pr. 934)* and *C44(Pr. 935)*.

(1) Operation selection for the pre-charge function

The pre-charge function ends when any of the following conditions is satisfied. It also ends when the start signal turns OFF or the output is shutoff (except for the PID output suspension function (SLEEP)).

Pre-charge ending condition		Related parameter
Measured amount	The measured amount reaches *Pr. 766 Pre-charge ending level* or higher.	*Pr. 761*
Time	The pre-charge operation lasts *Pr. 767 Pre-charge ending time* or longer.	*Pr. 762*
Signal	The pre-charge end command (X78) is input.	*Pr. 178 to Pr. 189*

Using parameters, set the pre-charge ending conditions and the pre-charge function to be valid or invalid.

Pr. 127 PID control automatic switchover frequency	Pre-charge ending condition *			Pre-charge function	Valid pre-charge ending condition		
	Pr. 761 Pre-charge ending level	*Pr. 762 Pre-charge ending time*	Pre-charge end command (X77)				
9999	-	-	-	Invalid	-		
Other than 9999	9999	9999	Not assigned				
			Assigned	Valid	-	-	X77
		Other than 9999	Not assigned		-	Time	-
			Assigned		-	Time	X77
	Other than 9999	9999	Not assigned		Measured amount	-	-
			Assigned		Measured amount	-	X77
		Other than 9999	Not assigned		Measured amount	Time	-
			Assigned		Measured amount	Time	X77

* When two or more conditions are satisfied, the pre-charge operation ends by the first-satisfied condition.

· Starting the pre-charge operation

Pre-charge operation starts when a start command is given (after the PID output suspension (SLEEP) or the MRS (output shutoff) signal cancellation) while the pre-charge operation is set active by parameters.

· Ending the pre-charge operation

The pre-charge operation ends and PID control starts when any of the ending conditions in the above table is satisfied.

REMARKS

- If the X77 or X78 signal is ON at start after the PID output suspension (SLEEP) or the output shutoff cancellation, PID control starts without performing the pre-charge operation.
- PID output suspension (SLEEP) is not performed until the pre-charge operation ends.
- During the pre-charge operation, it is regarded as integrated value = estimated value. The motor speed may drop shortly from the automatic switchover frequency depending on the parameter settings.
- Parameter changes and switchover to the second PID control are applied immediately. If PID control has not started when the settings were changed, PID control starts with changed settings. (If PID control has already started, these settings do not apply. If the changed settings already satisfy a condition to start PID control, the PID control starts as soon as these are changed.)

●Pre-charge operation

· When the measured amount reaches the pre-charge ending level

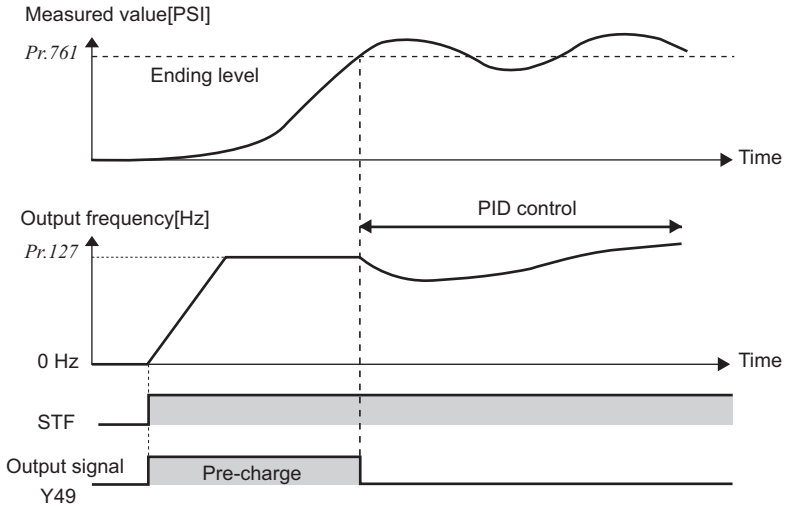

When the measured amount reaches the *Pr. 761* setting or higher, the pre-charge operation ends, and PID control starts.

Pr. 761 Pre-charge ending level ≠ 9999

· When the elapsed time reaches the pre-charge ending time

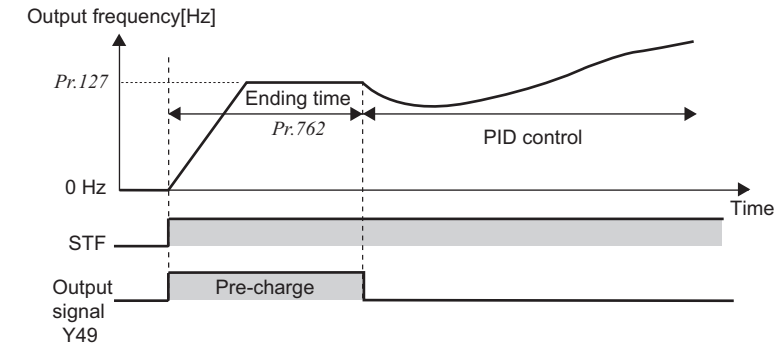

When the pre-charging time reaches the *Pr. 762* setting or higher, the pre-charge operation ends, and PID control starts.

Pr. 761 Pre-charge ending level = 9999
Pr. 762 Pre-charge ending time ≠ 9999

· When the signal is input to end the pre-charge operation

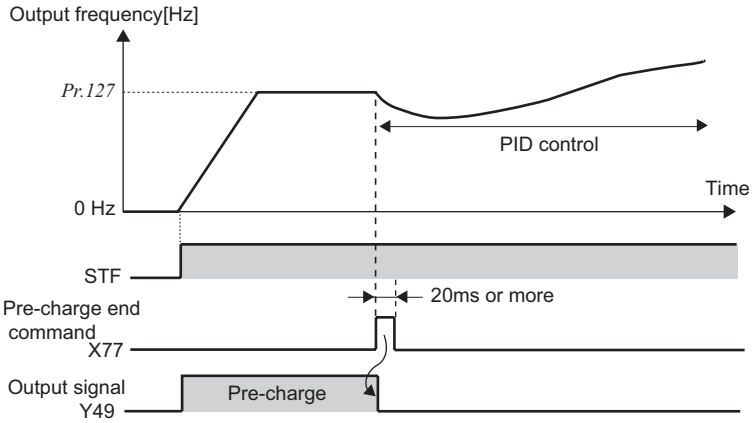

When the X77 signal turns ON, the pre-charge operation ends, and the PID control starts.
(If a start command is given while the X77 signal is ON, the pre-charge operation is not performed, and PID control is performed from the beginning.)

Pr. 178 to Pr. 189 = X77 assigned

REMARKS

- If the X77 signal stays ON, the pre-charge operation is not performed after the PID output suspension (SLEEP). To enable the X77 signal function after the PID output suspension (SLEEP), confirm the during pre-charge operation signal (Y49) = OFF, and turn OFF the X77 signal.
- To perform PID control immediately after the PID output suspension (SLEEP), keep the X77 signal ON until the PID control ends.

●Pre-charge operation at output shutoff

When the pre-charge operation is valid, the pre-charge operation is performed at the output shutoff cancellation.
(The pre-charge operation is also performed even if the automatic restart after instantaneous power failure is valid.)

When the output is shutoff during PID control, which is performed after the pre-charge operation

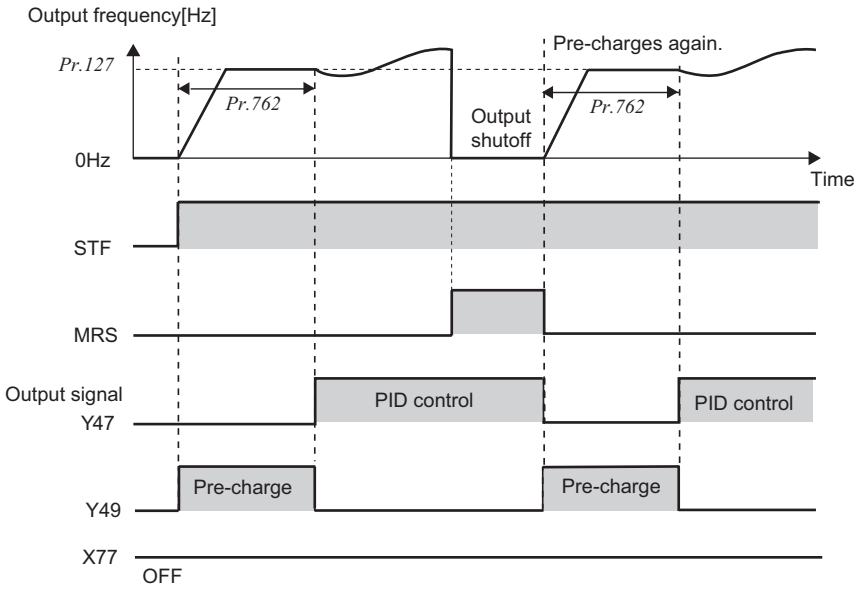

When the output is shutoff during the pre-charge operation

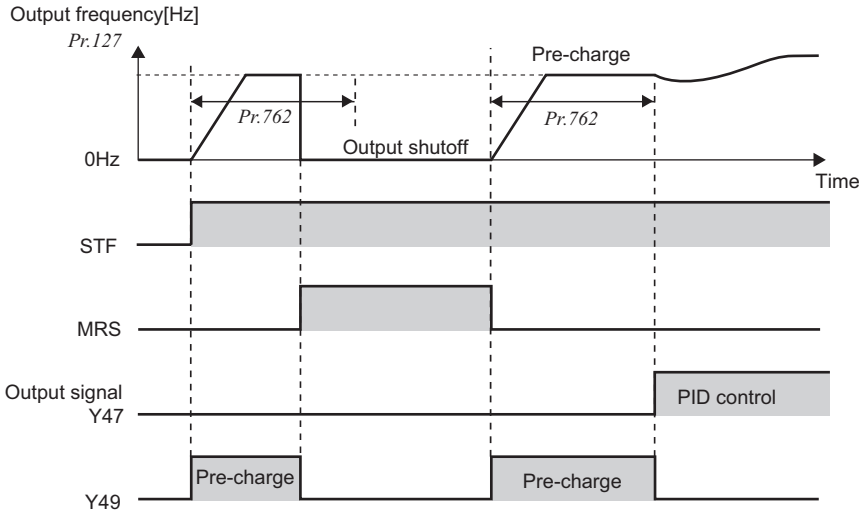

REMARKS

If the output shutoff is canceled while the X77 signal is ON, the pre-charge operation is not performed and PID control is performed.

●When the operation method is changed to PID control from another control

When the control method is changed to PID control from a control with higher priority in frequency command (multi-speed setting, Jog operation, etc.), the motor is accelerated/decelerated until its speed reaches the automatic switchover frequency, and the pre-charge is performed.

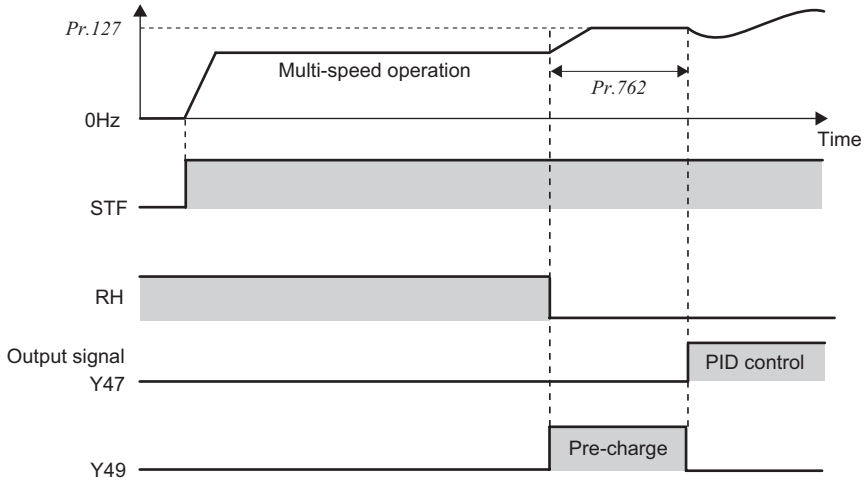

(2) Pre-charge protective function

The protective function is activated when the elapsed time or measured amount reaches the set level during the pre-charge operation. When the level is exceeded, Y51 to Y54 signals are turned ON depending on the control method, the output is shutoff, and the fault (E.PCH) is output. For *Pr. 760 Pre-charge fault selection*, select to shutoff the output and output the fault immediately after a fault occurrence (*Pr. 760* = 0), or to output the fault after deceleration to a stop (*Pr. 760* = 0). (Pre-charge protective function is effective whether the pre-charge ending conditions are set or not.)

Pre-charge limit level setting is available when the following conditions are satisfied:

- Ending time (*Pr. 762*) < Time limit (*Pr. 764*)
- Ending level (*Pr. 761*) < Upper detection level (*Pr. 763*)

REMARKS

When the protective function activates (including during deceleration to stop), Y51 to Y54 signals are kept ON once they are output whether PID control is valid or invalid. If a fault occurs after deceleration to stop, the fault is output after the stop whether PID control is valid or invalid.
The output of signal Y51 to Y54 can be released by a reset or the retry operation.

Limit by time

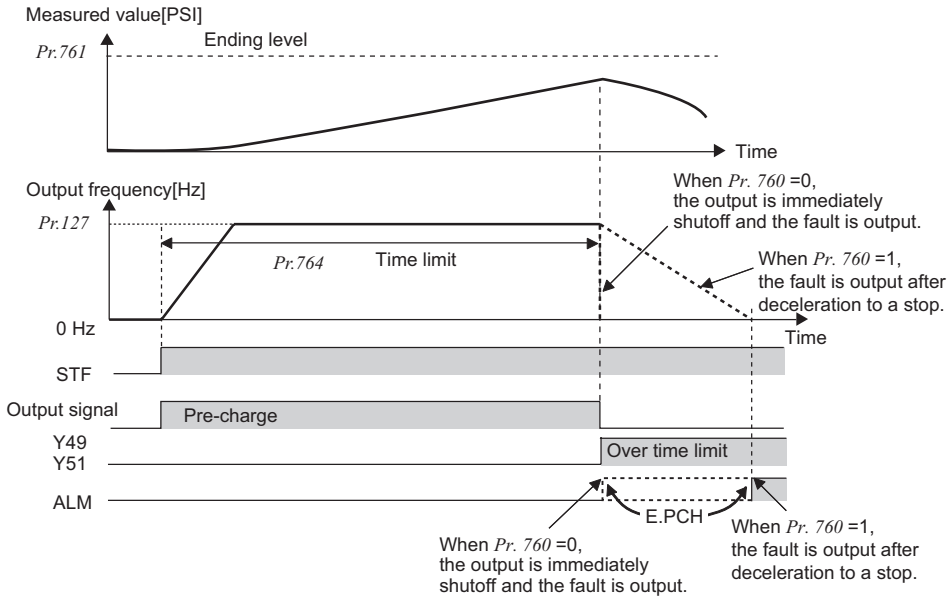

The fault (E.PCH) is output when the elapsed time reaches *Pr. 764 Pre-charge time limit*. With *Pr. 760 Pre-charge fault selection*, you can select to shut off the output and output the fault immediately after E.PCH, or to output the fault after deceleration to a stop.
Retry operation is performed at the fault output (E.PCH) only if *Pr. 65* = "0 or 4."

Limit by the measured amount

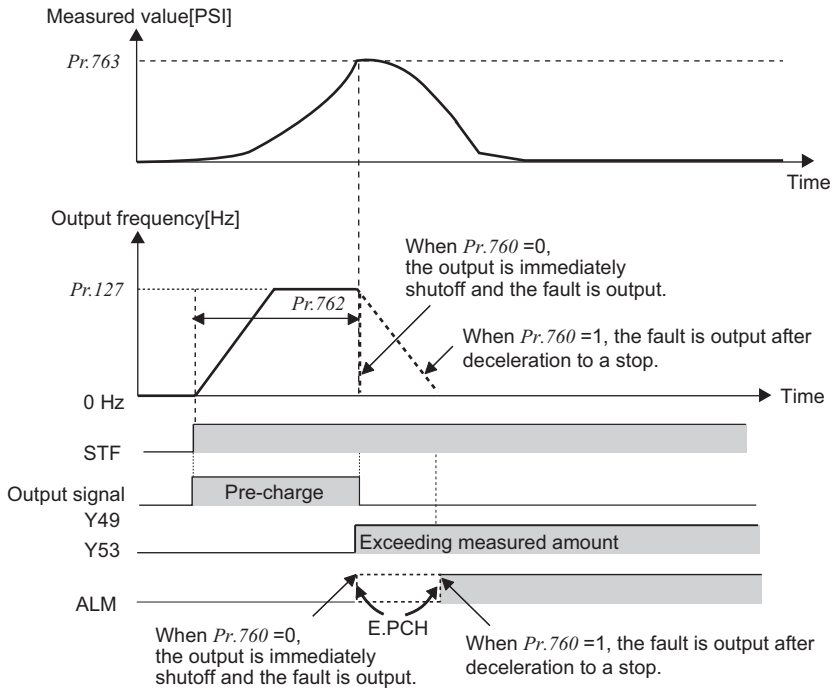

The fault (E.PCH) is output when the measured amount exceeds *Pr. 763 Pre-charge upper detection level*. With *Pr. 760 Pre-charge fault selection*, you can select to shut off the output and output the fault immediately after E.PCH, or to output the fault after deceleration to a stop.
Retry operation is performed at the fault output (E.PCH) only if *Pr. 65* = "0 or 4."

4.20.4 Second PID function (Pr.753 to Pr. 758, Pr.765 to Pr.769)

When the RT signal is ON and *Pr. 753 Second PID action selection* ≠ 9999, PID control is commanded by the second function parameters.
When *Pr. 753* = 9999, normal PID control is performed even if the second functions are valid.
When the control method is switched from the second PID control to the normal PID control, the integral value is estimated. The integral value is estimated by calculating the integral term with the output frequency and the P term. This method is same as when the control method changes to PID control when the frequency reaches the automatic switchover frequency.

Parameter Number	Name	Initial Value	Setting Range	Description	
753 Ver.UP	Second PID action selection	9999	10, 110 *2	PID reverse action	Deviation value signal input (terminal 1 *4)
			11, 111 *2	PID forward action	
			20, 120 *2	PID reverse action	Measured value (terminal 4 *5) Set point (terminal 2 *4 or *Pr. 133*)
			21, 121 *2	PID forward action	
			50 *2	PID reverse action	Deviation value signal input (LONWORKS, CC-Link, BACnet)
			51 *2	PID forward action	
			60 *2	PID reverse action	Measured value, set point input (LONWORKS, CC-Link, BACnet)
			61 *2	PID forward action	
			70 *6	PID reverse action	Deviation value signal input (PLC function)
			71 *6	PID forward action	
			80 *6	PID reverse action	Measured value, set point input (PLC function)
			81 *6	PID forward action	
			90 *6	PID reverse action	Deviation value signal input (PLC function) (Not reflected to the inverter frequency)
			91 *6	PID forward action	
			100 *6	PID reverse action	Measured value, set point input (PLC function) (Not reflected to the inverter frequency)
			101 *6	PID forward action	
			9999	Normal PID control is performed regardless of the second PID control parameter settings.	
754 Ver.UP	Second PID control automatic switchover frequency	9999	0 to 400Hz	Set the frequency at which the control is automatically changed to PID control while the RT signals is ON.	
			9999	Without second PID control automatic switchover function	
755 *1 Ver.UP	Second PID action set point	9999	0 to 100% *3	Set the set point for PID control, which is performed while the RT signal is ON.	
			9999	Terminal 2 input is the set point while the RT signal is ON.	
756 *1 Ver.UP	Second PID proportional band	100%	0.1 to 1000%	Set the proportional band for PID control, which is performed while the RT signal is ON. If the proportional band is narrow (parameter setting is small), the manipulated variable varies greatly with a slight change of the measured value. Hence, as the proportional band narrows, the response sensitivity (gain) improves but the stability deteriorates, e.g. hunting occurs. Gain Kp = 1/proportional band	
			9999	Without second proportional band	
757 *1 Ver.UP	Second PID integral time	1s	0.1 to 3600s	Set the PID integral time for PID control, which is performed while the RT signal is ON. When deviation step is input, time (Ti) is the time required for integral (I) action to provide the same manipulated variable as proportional (P) action. As the integral time decreases, the set point is reached earlier but hunting occurs more easily.	
			9999	Without second integral control	
758 *1 Ver.UP	Second PID differential time	9999	0.01 to 10.00s	Set the PID differential time for PID control, which is performed while the RT signal is ON. When deviation lamp is input, time (Td) is the time required to provide the manipulated variable of only the proportional (P) action. As the differential time increases, greater response is made to a deviation change.	
			9999	Without second differential control	

Parameter Number	Name	Initial Value	Setting Range	Description
765 Ver.UP	Second pre-charge fault selection	0	0	When the pre-charged amount exceeds *Pr. 768* or the pre-charged time exceeds *Pr. 769* while the RT signal is ON, the fault (E.PCH) is output.
			1	When the pre-charged amount exceeds *Pr. 768* or the pre-charged time exceeds *Pr. 769* while the RT signal is ON, the motor decelerates to stop, and the fault (E.PCH) is output.
766 Ver.UP	Second pre-charge ending level	9999	0 to 100% *3	Set the measurement level to end the pre-charge operation, which is performed while the RT signal is ON.
			9999	Without second pre-charge ending level
767 Ver.UP	Second pre-charge ending time	9999	0.0 to 3600s	Set the time to end the pre-charge operation, which is performed while the RT signal is ON.
			9999	Without second pre-charge ending time
768 Ver.UP	Second pre-charge upper detection level	9999	0 to 100% *3	Set the upper limit for the pre-charged amount, which is charged while the RT signal is ON. If the pre-charged amount exceeds the set level, the fault (E.PCH) is output.
			9999	Without second pre-charge ending level
769 Ver.UP	Second pre-charge time limit	9999	0.0 to 3600s	Set the time limit for the pre-charge operation, which is performed while the RT signal is ON. If the pre-charged time exceeds the set level, the fault (E.PCH) is output.
			9999	Without second pre-charge time limit

The above parameters can be set when *Pr. 160 User group read selection* = "0". *(Refer to page 190)*

Ver.UP … Specifications differ according to the date assembled. *Refer to page 400* to check the SERIAL number.

*1 The above parameters allow its setting to be changed during operation in any operation mode even if "0" (initial value) is set in *Pr. 77 Parameter write selection*.

*2 PID control is available without turning X14 signal ON when *Pr.128* = "50, 51, 60, 61, 110, 111, 120, 120".

*3 Setting values of *Pr.755, Pr.766, Pr.768* are without unit when "9999" is set to both of *C42(Pr.934)* and *C44(Pr.935)*.

*4 Input specification for the terminals are determined by *Pr.73 Analog input selection*.

*5 Input specification for the terminal is determined by *Pr.267 Terminal 4 input selection*.

*6 Refer to the FR-F700 PLC function programming manual for details of the PLC function.

Normal PID control (RT signal is OFF)	Second PID control (RT signal is ON)
Pr.128 PID action selection	*Pr.753 Second PID action selection*
Pr.127 PID control automatic switchover frequency	*Pr.754 Second PID control automatic switchover frequency*
Pr.133 PID action set point	*Pr.755 Second PID action set point*
Pr.129 PID proportional band	*Pr.756 Second PID proportional band*
Pr.130 PID integral time	*Pr.757 Second PID integral time*
Pr.134 PID differential time	*Pr.758 Second PID differential time*
Pr.760 Pre-charge fault selection	*Pr.765 Second pre-charge fault selection*
Pr.761 Pre-charge ending level	*Pr.766 Second pre-charge ending level*
Pr.762 Pre-charge ending time	*Pr.767 Second pre-charge ending time*
Pr.763 Pre-charge upper detection level	*Pr.768 Second pre-charge upper detection level*
Pr.764 Pre-charge time limit	*Pr.769 Second pre-charge time limit*

REMARKS

- The control switches between PID control and second PID control by the following operation:
  - Turning ON/OFF the RT signal while *Pr. 753* ≠ 9999
  - Setting "9999" or a value other than "9999" in *Pr. 753* while the RT signal is ON.
- The RT signal acts as the second function selection signal and makes the other second functions valid. *(Refer to page 125)*
- In the initial setting, the RT signal is assigned to the RT terminal. By setting "3" to any of *Pr. 178 to Pr. 189 (Input terminal function selection)*, you can assign the RT signal to the other terminal.

♦ Parameters referred to ♦

Pr. 59 Remote function selection ☞ *Refer to page 98*
Pr. 73 Analog input selection ☞ *Refer to page 171*
Pr. 79 Operation mode selection ☞ *Refer to page 195*
Pr. 178 to Pr. 189 (input terminal function selection) ☞ *Refer to page 122*
Pr. 190 to Pr. 196 (output terminal function selection) ☞ *Refer to page 128*
Pr. 759 PID unit selection ☞ *Refer to page 261*
C2 (Pr. 902) to C7 (Pr. 905) Frequency setting voltage (current) bias/gain ☞ *Refer to page 177*

4.20.5 Advanced PID function (pump function) (Pr. 554, Pr. 575 to Pr. 591)

PID control function can adjust the volume of water, etc. by controlling a pump. Multiple motors (4 motors maximum) can be controlled by switching between the inverter-driven operation and commercial power-driven operation. Use *Pr. 579 Motor connection function selection* to select switchover operation of the motor. Up to three auxiliary motors can be connected.

Parameter Number	Name	Initial Value	Setting Range	Description
554 Ver.UP	**PID signal operation selection**	0	0 to 3, 10 to 13	Select the operation to be performed at the detection of upper, lower, and deviation limit for the measured value input. The operation for PID output suspension function can be selected.
575	**Output interruption detection time**	1s	0 to 3600s	The inverter stops operation if the output frequency after PID operation remains at less than the *Pr. 576* setting for longer than the time set in *Pr. 575*.
			9999	Without output interruption function
576	**Output interruption detection level**	0Hz	0 to 400Hz	Set the frequency at which the output interruption processing is performed.
577	**Output interruption cancel level**	1000%	900 to 1100%	Set the level (*Pr. 577* minus 1000%) to release the PID output interruption function.
578	**Auxiliary motor operation selection**	0	0	No auxiliary motor operation
			1 to 3	Set the number of auxiliary motors to be run
579	**Motor connection function selection**	0	0	Basic system
			1	Alternative system
			2	Direct system
			3	Alternative-direct system
580	**MC switching interlock time**	1s	0 to 100s	You can set the time until MC switchover interlock time when *Pr. 579* = "2, 3" is set.
581	**Start waiting time**	1s	0 to 100s	You can set the time from when the MC is switched until it starts when *Pr. 579* = "2, 3". Set this time a little longer than the MC switching time.
582	**Auxiliary motor connection-time deceleration time**	1s	0 to 3600/360s *1	You can set the deceleration time for decreasing the output frequency of the inverter if a motor connection occurs under advanced PID control.
			9999	The output frequency is not forcibly changed.
583	**Auxiliary motor disconnection-time acceleration time**	1s	0 to 3600/360s *1	You can set the acceleration time for increasing the output frequency of the inverter if a motor disconnection occurs under advanced PID control.
			9999	The output frequency is not forcibly changed.
584	**Auxiliary motor 1 starting frequency**	60Hz	0 to 400Hz	Set the frequency to connect an auxiliary motor.
585	**Auxiliary motor 2 starting frequency**	60Hz	0 to 400Hz	
586	**Auxiliary motor 3 starting frequency**	60Hz	0 to 400Hz	
587	**Auxiliary motor 1 stopping frequency**	0Hz	0 to 400Hz	Set the frequency to open an auxiliary motor.
588	**Auxiliary motor 2 stopping frequency**	0Hz	0 to 400Hz	
589	**Auxiliary motor 3 stopping frequency**	0Hz	0 to 400Hz	
590	**Auxiliary motor start detection time**	5s	0 to 3600s	You can set the delay time until the auxiliary motor is started.
591	**Auxiliary motor stop detection time**	5s	0 to 3600s	You can set the delay time until the auxiliary motor is stopped.

The above parameters can be set when *Pr. 160 User group read selection* = "0". *(Refer to page 190)*

Ver.UP ....Specifications differ according to the date assembled. *Refer to page 400* to check the SERIAL number.

*1 Depends on the *Pr. 21 Acceleration/deceleration time increments* setting. The initial value for the setting range is "0 to 3600s" and the setting increments is "0.1s".

(1) Operation

· Set the number of commercial power supply operation motors in *Pr. 578 Auxiliary motor operation selection* and motor switching method in *Pr. 579 Motor connection function selection*.

Pr.579 Setting	Name	Description
0	Basic system	The motor to be inverter-driven is always fixed and you can increase/decrease the number of motors commercial power-driven by turning on and off the MC between the power supply and motor with the output frequency.
1	Alternative system	As same as basic system (*Pr. 579* = "0"), the motor to be driven by the inverter is fixed during operation and you can control the number of motors operated by the commercial power with the output frequency. When the inverter stops by the sleep function, the MC between the inverter and motor is switched to switch motors to be inverter-driven.
2	Direct system	When the start signal is entered, the motor is started by the inverter. When the conditions to start the next motor are established, switching MCs between the inverter and motor and the power supply and motor will change the inverter driven motor to commercial power-supply operation and start the next motor by the inverter. Adversely, when conditions to stop the motor is established while multiple motors are running, motors stop in order of first started motor (in the commercial power-supply operation).
3	Alternative-direct system	When the start signal is entered, the motor is started by the inverter. When the conditions to start the next motor are established, switching MCs between the inverter and motor and the power supply and motor will change the inverter driven motor to commercial power-supply operation and start the next motor by the inverter. Conversely, when the conditions for stopping the motors are enabled during running of several motors, the inverter-driven motor is decelerated to s stop and the motors under commercial power supply operation are switched over to inverter-driven operation after frequency search. Since frequency search is performed when the motor running with commercial power-supply is switched to the inverter-driven operation, set a value other than "9999" in *Pr. 57 Restart coasting time*. When *Pr. 57* is set, the CS signal need not be turned ON.

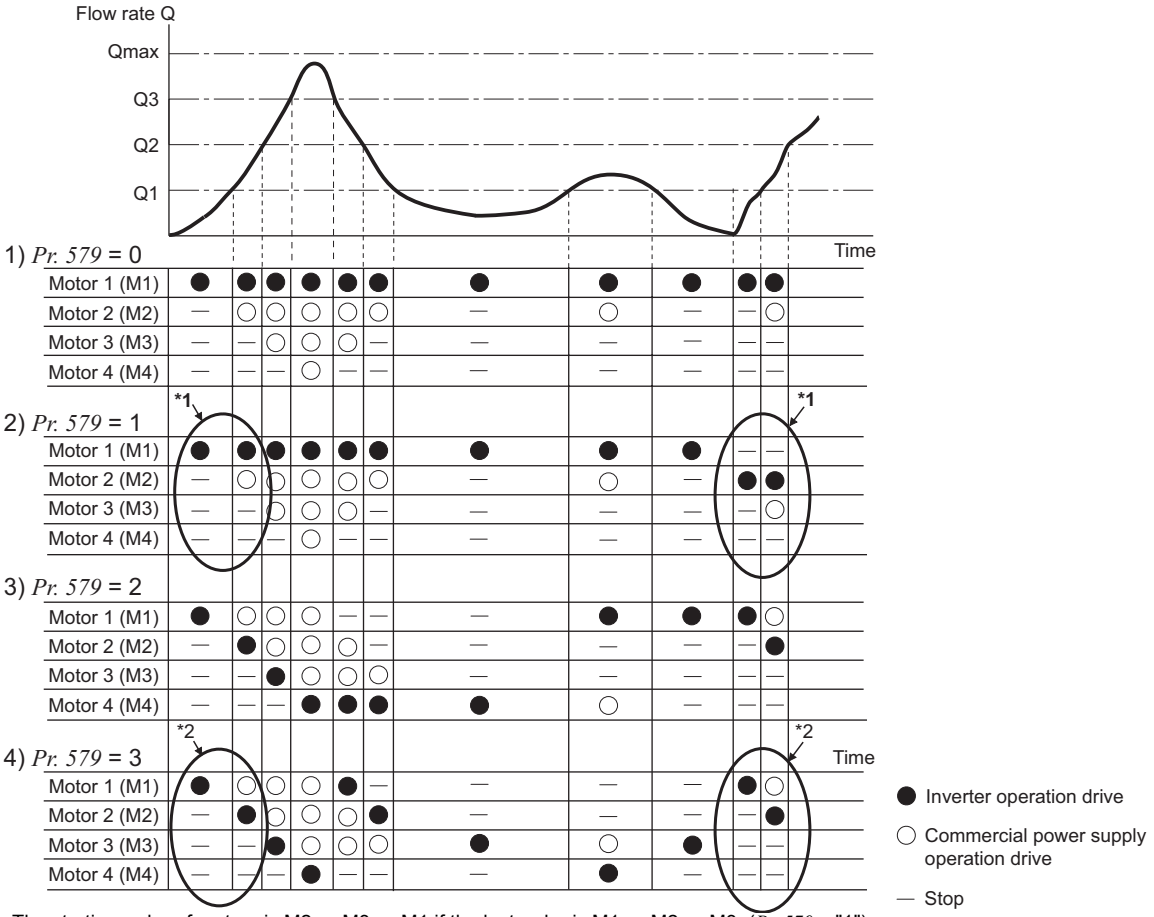

*1 The starting order of motors is M2 → M3 → M1 if the last order is M1 → M2 → M3. (*Pr. 579* = "1")

*2 The motor status in the order of elapsed time after the last inverter driving completion, from the longest (has not inverter-driven for the longest time) to the shortest. The motor 1 (M1) starts first when power is turned ON for the first time or after reset. (*Pr. 579* = "3")

REMARKS

· The starting order of motors to be driven returns to the initial status at an inverter reset. (*Pr. 579* = "1, 2, 3")

· For *Pr. 578* and *Pr. 579*, parameter write is disabled during operation. In addition, when the *Pr. 578* or *Pr. 579* setting has been changed during stop, the starting order of motors also returns to the initial status.

(2) System configuration

· Basic system (*Pr. 579* = "0")

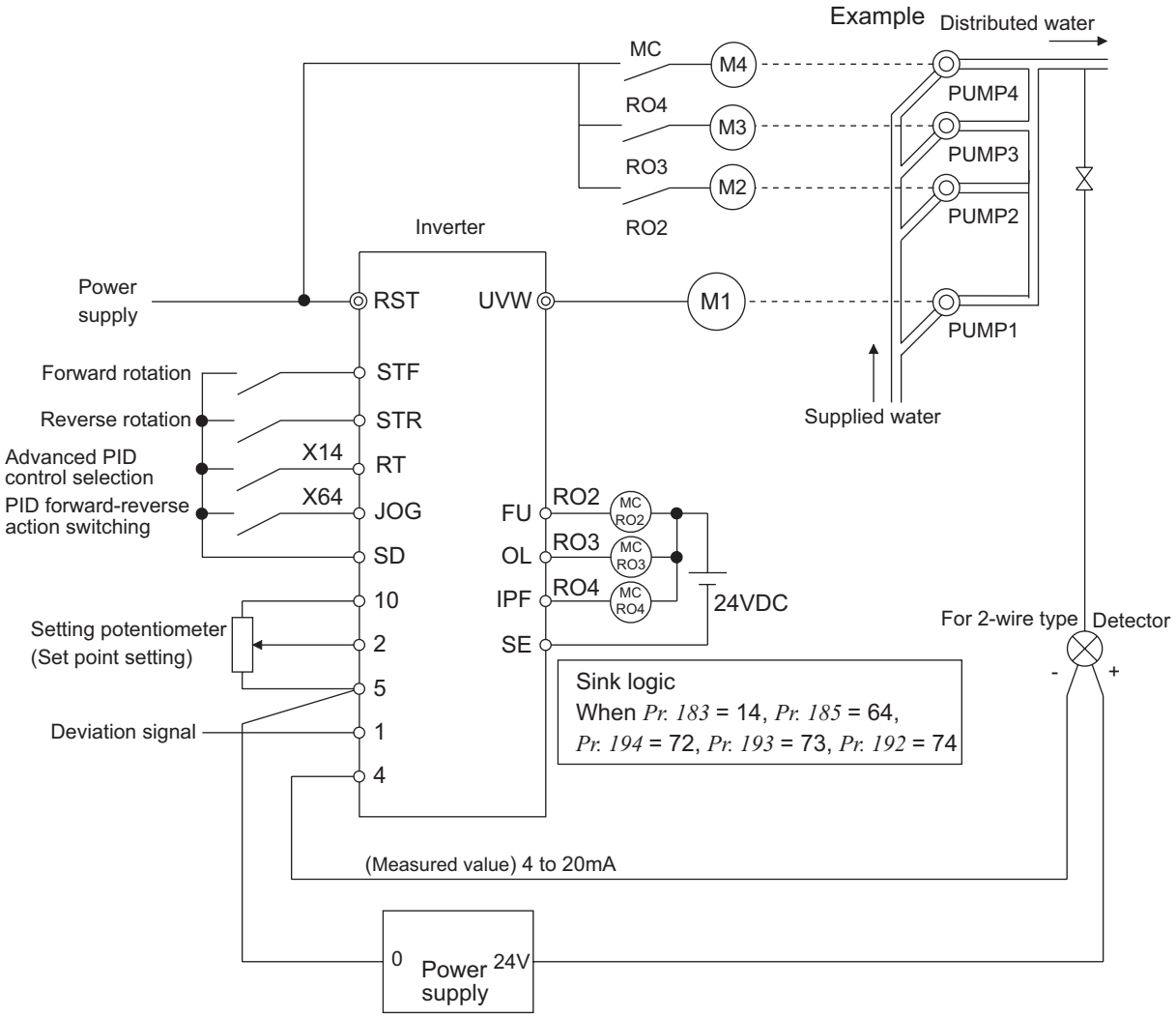

· Alternative system (*Pr. 579* = "1"), direct system (*Pr. 579* = "2"), alternative-direct system (*Pr. 579* = "3")

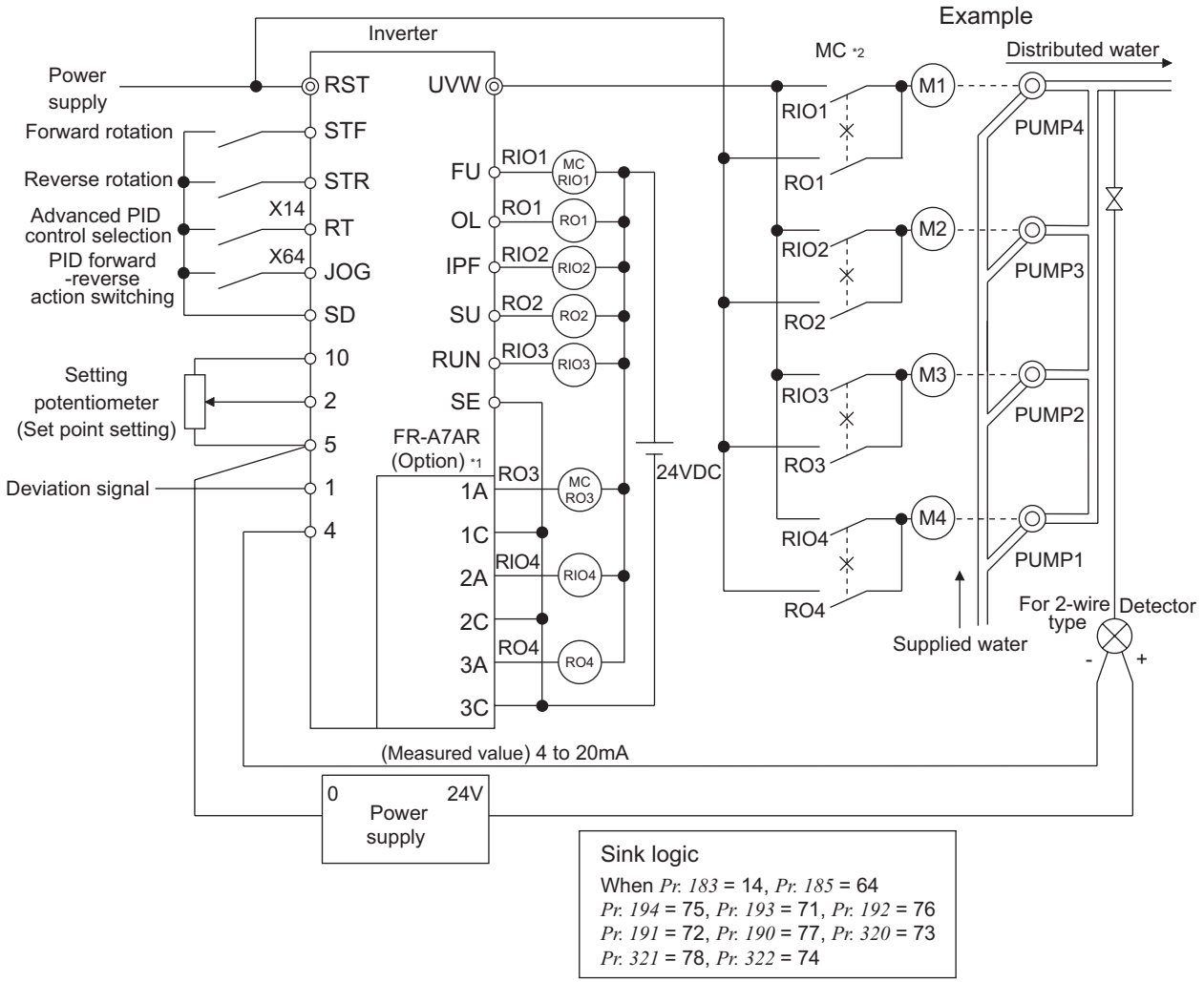

*1 When driving three or more motors, use the plug-in option (FR-A7AR).
*2 Always provide mechanical interlocks for the MC.

(3) I/O signals

· Turn the X14 signal ON when performing advanced PID control. Set "14" in *Pr. 186 to Pr. 189 (input terminal function selection)* to assign a function to the X14 signal.
· PID control depends on the *Pr. 127 to Pr. 134, C42 to C45* settings. *(Refer to page 261)*
· Use *Pr.190 to Pr.196 (output terminal function selection)* or relay output option (FR-A7AR) to assign functions of motor control signal to *Pr.320 to Pr.322 (RA1, RA2, RA3 output selection)*. (Only positive logic is available for output terminals.)

Signal	Output Terminal Function Selection Setting		Function
	Positive logic	Negative logic	
SLEEP	70	170 *1	During PID output interruption
RO1	71	— *2	Commercial-power supply side motor 1 connection
RO2	72	— *2	Commercial-power supply side motor 2 connection
RO3	73	— *2	Commercial-power supply side motor 3 connection
RO4	74	— *2	Commercial-power supply side motor 4 connection
RIO1	75	— *2	Inverter side motor 1 connection
RIO2	76	— *2	Inverter side motor 2 connection
RIO3	77	— *2	Inverter side motor 3 connection
RIO4	78	— *2	Inverter side motor 4 connection
SE	—	— *2	Output terminal common

*1 This value cannot be set in *Pr. 320 to Pr. 322 (RA1, RA2, RA3 output selection)*, parameters for relay output option (FR-A7AR).
*2 Negative logic cannot be set.

(4) Motor switchover timing

· Switchover timing at a start (stop) of an auxiliary motor 1 in the basic system (*Pr. 579* = "0") and alternative system (*Pr. 579* = "1").

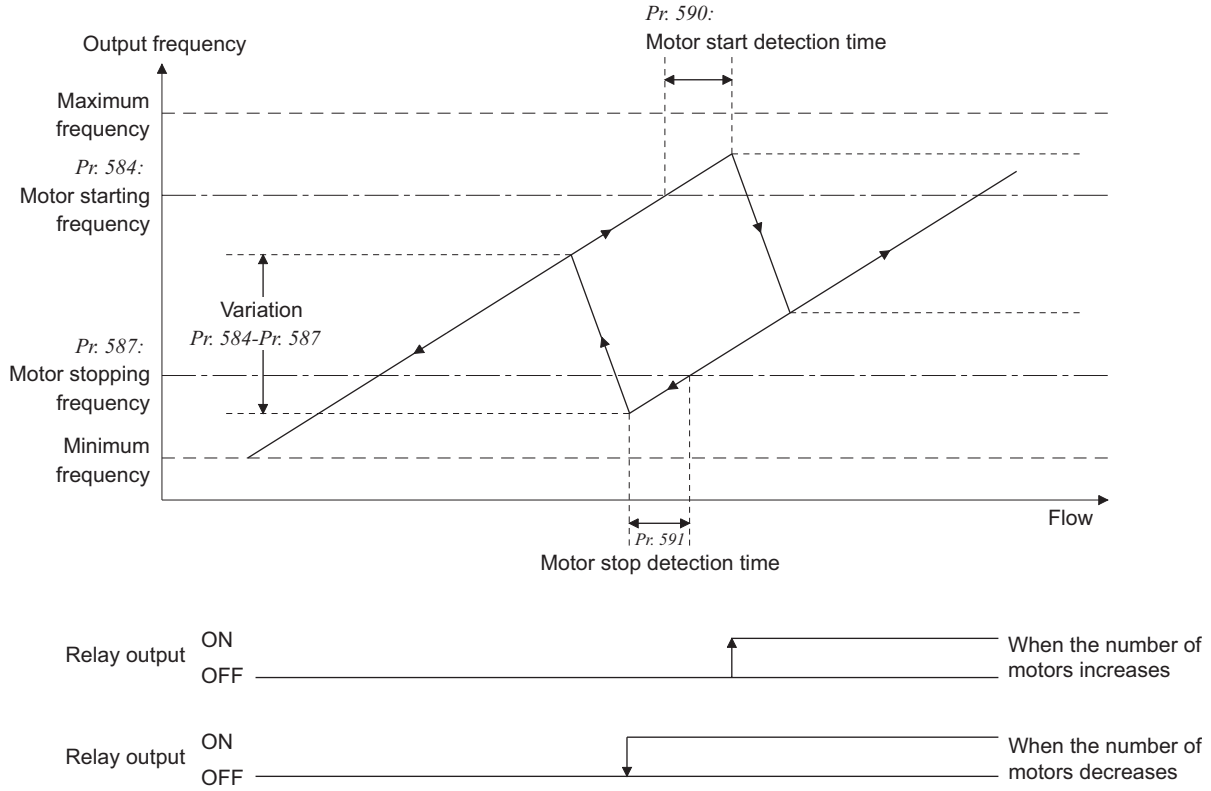

· Switchover timing at a start (stop) of an auxiliary motor 1 in the direct system (*Pr. 579* = "2") and alternative-direct system (*Pr. 579* = "3").

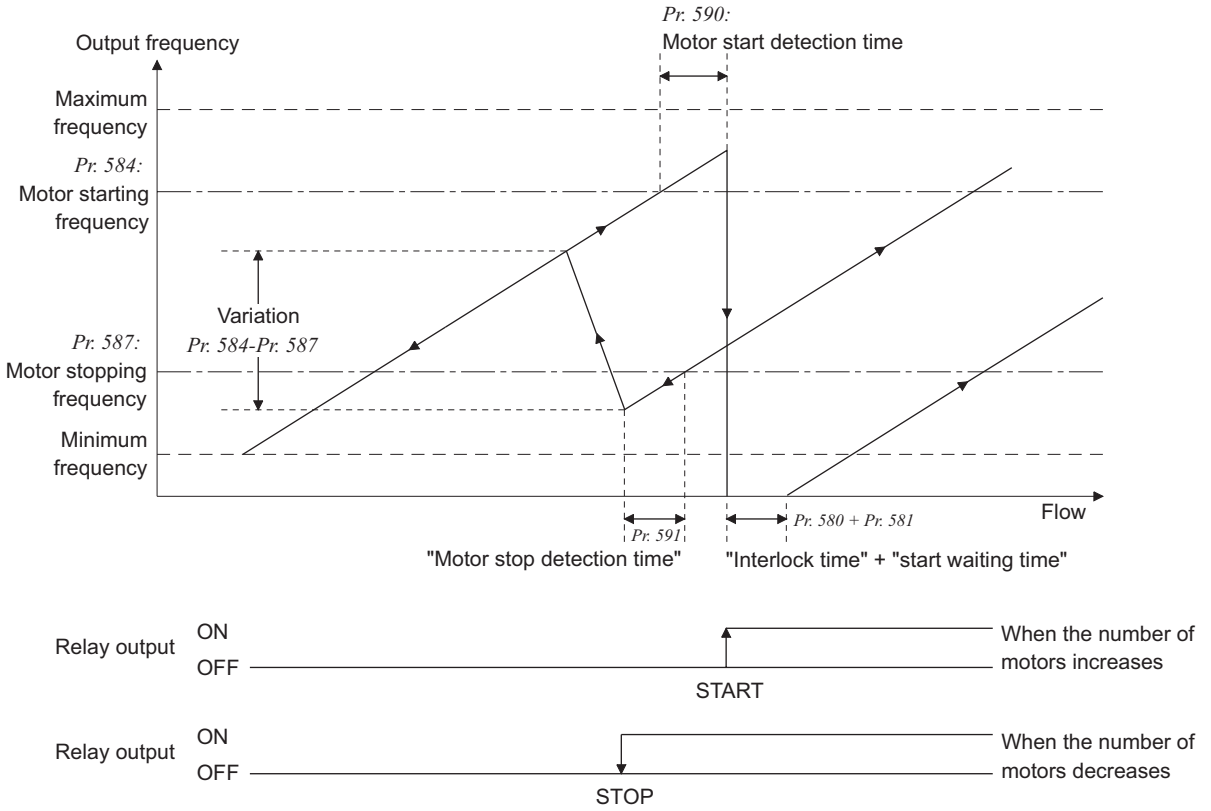

(5) Waiting time setting at MC switchover *(Pr. 580, Pr. 581)*

- Set a switching time of MC (e.g. time until RIO1 turns ON after RO1 turns OFF) in *Pr. 580 MC switching interlock time* in the direct system (*Pr. 579* = "2"). You can set the time from MC switch-over to a start (time from when RIO1 turns OFF and RIO2 turns ON until inverter output starts). Set this time a little longer than the MC switching time.
- You can set the time from MC switch-over to a start (time from when RIO1 turns OFF and RIO2 turns ON until inverter output starts) in *Pr. 581 Start waiting time* in the direct system (*Pr. 579* = "2"). Set this time a little longer than the MC switching time.

(6) Acceleration/deceleration time when an auxiliary motor is connected and disconnected *(Pr. 582, Pr.583)*

- You can set the deceleration time in *Pr. 582 Auxiliary motor connection-time deceleration time* for decreasing the output frequency of the inverter if an auxiliary motor connection occurs. Set the deceleration time in *Pr. 582* from *Pr. 20 Acceleration/deceleration reference frequency* to stop.
  The output frequency is not forcibly changed when "9999" is set.
- You can set the acceleration time in *Pr. 583 Auxiliary motor disconnection-time acceleration time* for accelerating the output frequency of the inverter if an auxiliary motor disconnection occurs. Set the deceleration time in *Pr. 583* from *Pr. 20 Acceleration/deceleration reference frequency* to stop.
  The output frequency is not forcibly changed when "9999" is set.

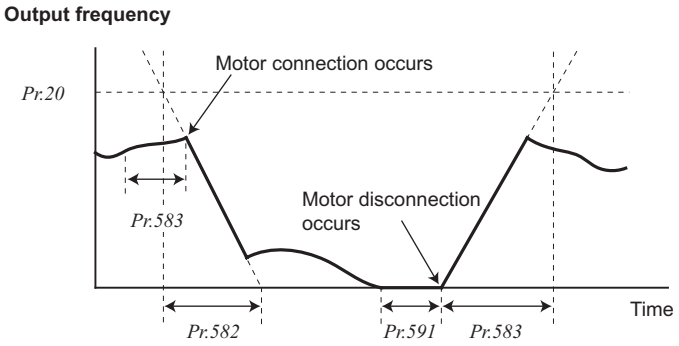

REMARKS

Pr. 582 and *Pr. 583* are not affected by the *Pr. 21 Acceleration/deceleration time increments* setting. (Setting range and setting increments do not change.)

(7) Start of auxiliary motor *(Pr. 584 to Pr. 586, Pr. 590)*

- You can set the output frequency of the inverter-operated motor in *Pr. 584 to Pr. 586* at which the commercial-power supply operation motors start. When the output frequency equal to or higher than the setting continues for longer than the time set in *Pr. 590 Auxiliary motor start detection time*, the commercial-power supply motors start. In this case, the starting sequence depends on the pattern in *Pr. 579 Motor connection function selection*.
- *Pr. 584 Auxiliary motor 1 starting frequency* value means the frequency at which the first commercial-power supply motor starts when the number of commercial-power supply motors. When starting the second commercial-power supply motor when one commercial-power supply motor is running, set *Pr. 585 Auxiliary motor 2 starting frequency*.

(8) Start of auxiliary motor *(Pr. 587 to Pr. 589, Pr. 591)*

- You can set the output frequency of the inverter-operated motor in *Pr. 587 to Pr. 589* at which the commercial-power supply operation motors stop. When the output frequency equal to or lower than the setting continues for longer than the time set in *Pr. 591 Auxiliary motor stop detection time*, the commercial-power supply motors stop. In this case, the stopping sequence depends on the pattern in *Pr. 579 Motor connection function selection*.
- Use *Pr. 587 Auxiliary motor 1 stopping frequency* to set the frequency at which one commercial-power supply motor running stops. When stopping one commercial-power supply motor when two commercial-power supply motors are running, set *Pr. 588 Auxiliary motor 2 stopping frequency*.

(9) PID output suspension function (SLEEP function) (SLEEP signal, *Pr. 554*, *Pr. 575 to Pr. 577*)

- The inverter stops operation if the output frequency after PID control remains at less than the *Pr. 576 Output interruption detection level* setting for longer than the time set in *Pr. 575 Output interruption detection time*. (At this time, if "0 to 3" is set to *Pr.554 PID signal operation selection*, output is shut off (the inverter coasts to stop) when SLEEP operation starts. If "10 to 13" is set, the inverter decelerates to a stop in the deceleration time set in *Pr.8* when SLEEP operation starts.)

  This function can reduce energy consumption in the low-efficiency, low-speed range.

Pr.554 Setting	SLEEP Function	FUP Signal, FDN Signal	Y48 Signal
0 (Initial value)	Inverter coasts to a stop at the start of SLEEP operation	Only signal output	Only signal output
1		Signal output + stop by fault (E.PID)	
2		Only signal output	Signal output + stop by fault (E.PID)
3		Signal output + stop by fault (E.PID)	
10	Inverter decelerates to a stop at the start of SLEEP operation	Only signal output	Only signal output
11		Signal output + stop by fault (E.PID)	
12		Only signal output	Signal output + stop by fault (E.PID)
13		Signal output + stop by fault (E.PID)	

- When the deviation (= set value - measured value) reaches the PID output shutoff cancel level (*Pr. 577* setting - 1000%) while the PID output interruption function is ON, the PID output interruption function is canceled and PID control operation is resumed automatically.
- While the PID output interruption function is ON, the PID output interruption signal (SLEEP) is output. At this time, the inverter running signal (RUN) is OFF and the PID control operating signal (PID) is ON.
- For the terminal used for the SLEEP signal output, assign the function by setting "70" (positive logic) or "170" (negative logic) in *Pr. 190 to Pr. 196 (output terminal function selection)*.

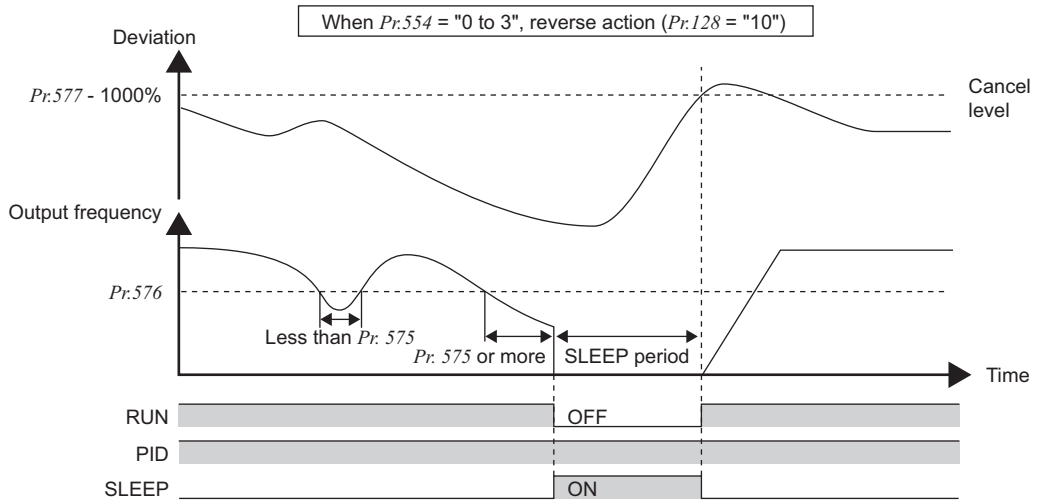

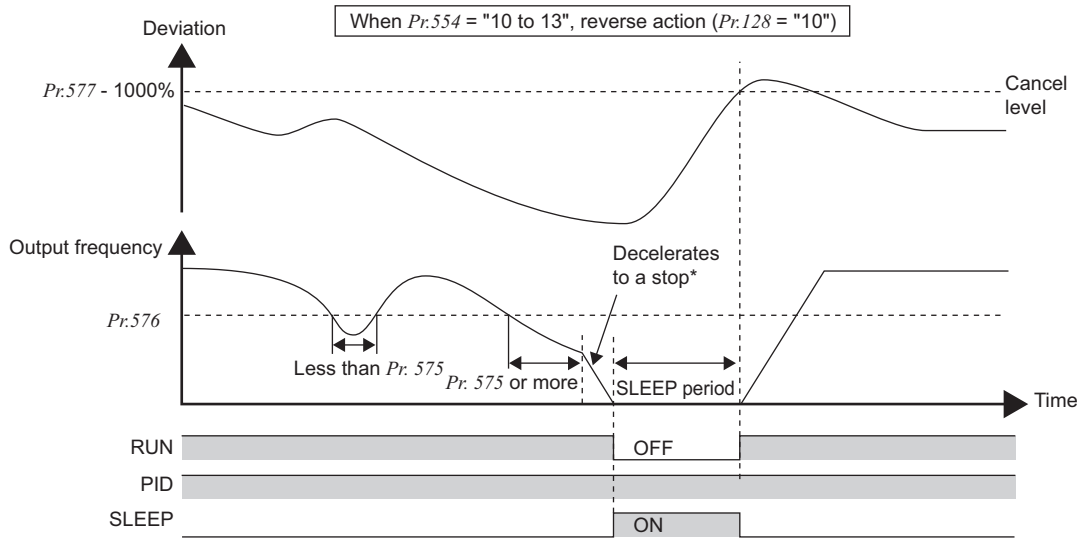

* When the output rises to the output interruption cancel level during deceleration to a stop, output interruption gets cancelled, and the inverter accelerates again to continue PID control. *Pr.576 Output interruption detection level* is invalid during deceleration.

(10) Timing diagram

· When using four motors in the basic system (*Pr. 579* = "0")

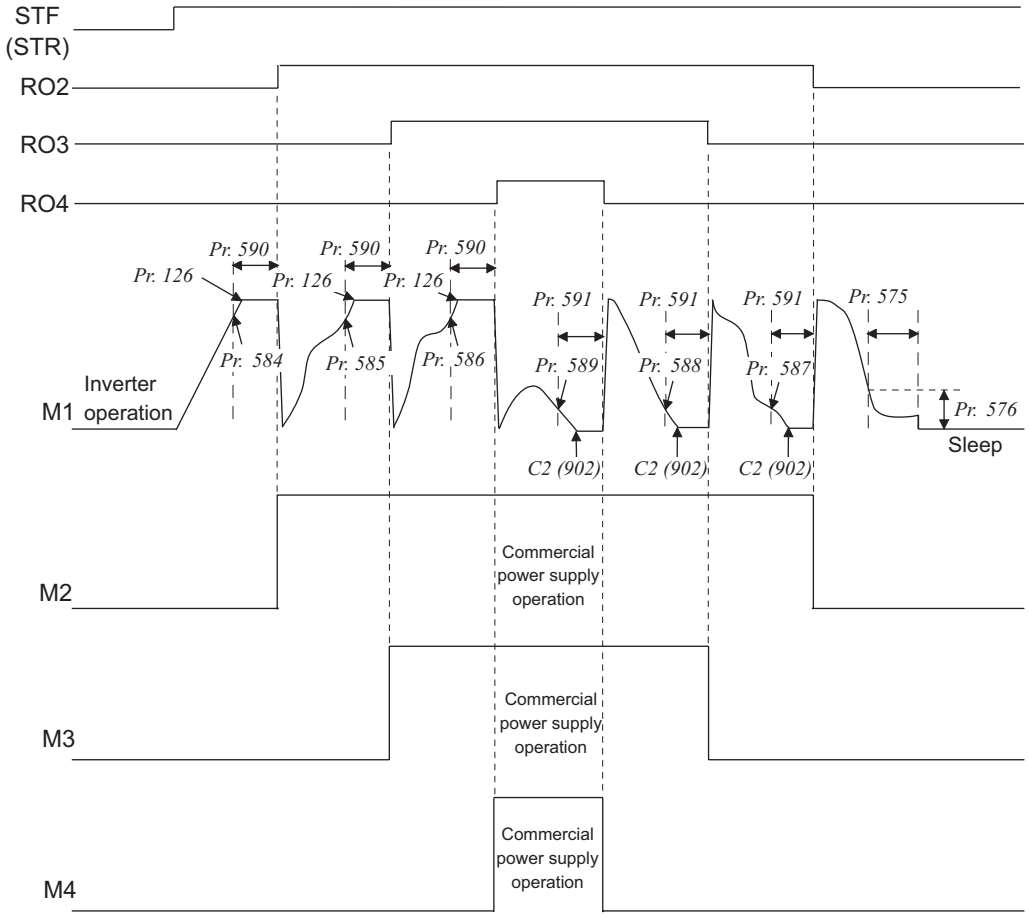

· When using two motors in the alternative system (*Pr. 597* = "1")

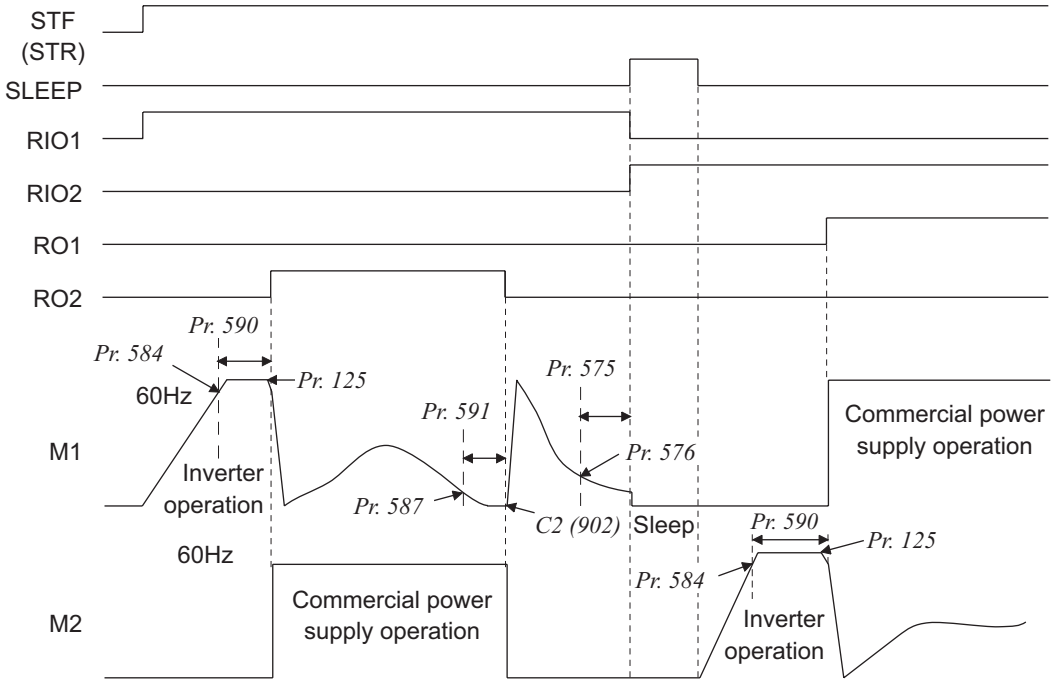

· When using two motors in the direct system (*Pr. 597* = "2")

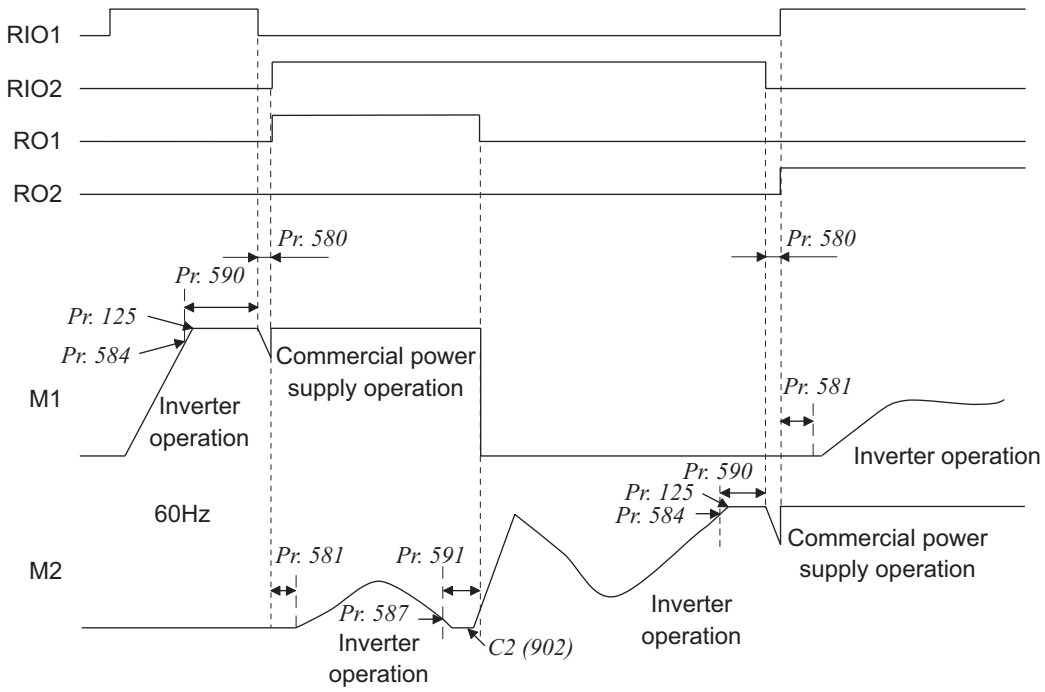

CAUTION

· When a start signal is turned OFF while running, MC (RO1 to RO4) turns OFF and the inverter decelerates.
· When an error occurs while running, MC (RO1 to RO4) turns OFF and the inverter output is shut off.

· When using two motors in the alternative-direct system (*Pr. 579* = "3")

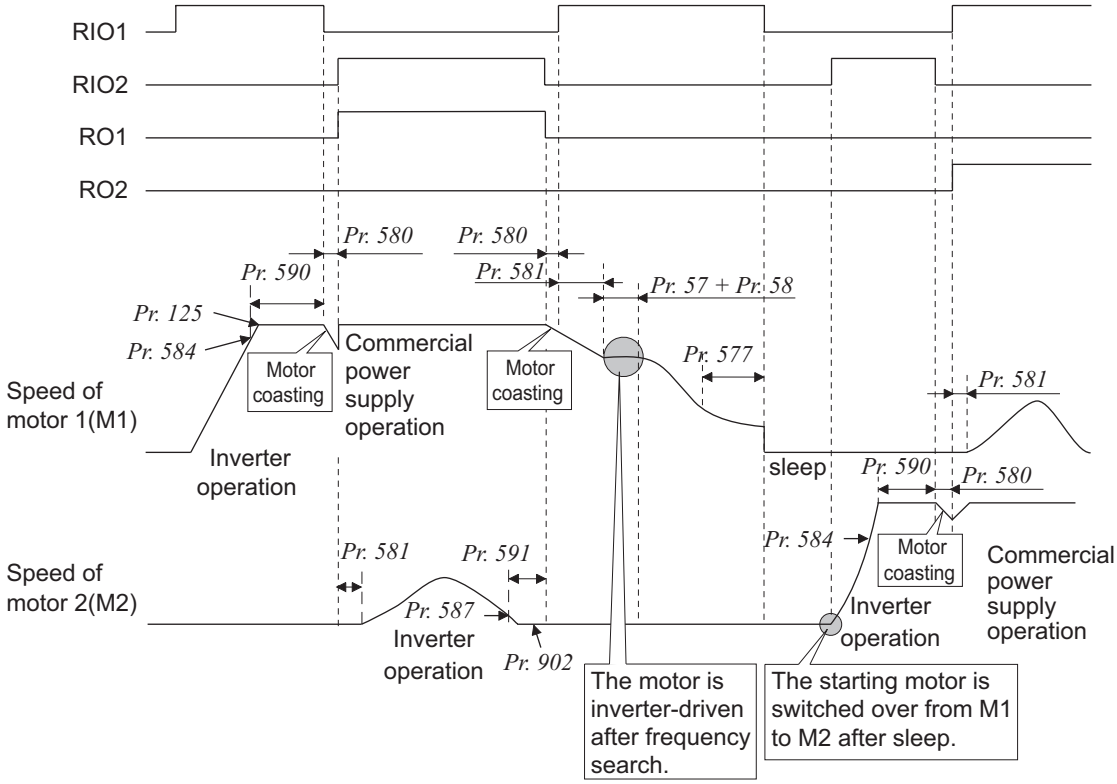

CAUTION

- If the start signal is turned OFF during operation, the inverter-driven motor is decelerated to stop, and the motors under commercial power supply operation are switched over to inverter-driven operation one at a time and decelerated to a stop after frequency search in order from the longest operation time.
- When an error occurs while running, MC (RO1 to RO4) turns OFF and the inverter output is shut off.
- If the MRS signal is turned ON during operation, the inverter-driven motor is shut off. Although the motor with the longest operating time of the commercial power supply operation is switched to the inverter operation after elapse of time set in *Pr. 591 Auxiliary motor stop detection time* , the motor remains in the output shut off status. Frequency search is made after the MRS signal turns OFF and inverter operation is started.
- If the starting signal is turned ON during deceleration to stop regardless of the *Pr. 579* setting, operation by the advanced PID control is performed again at the point when the signal is turned ON.

♦ Parameters referred to ♦

Pr. 20 Acceleration/deceleration reference frequency, Pr. 21 Acceleration/deceleration time increments ☞ *Refer to page 101*
Pr. 127 to Pr. 134, C42 to C45 (PID control) ☞ *Refer to page 261*
Pr.178 to Pr.189 (input terminal function selection) ☞ *Refer to page 122*
Pr. 190 to Pr. 196 (output terminal function selection) ☞ *Refer to page 128*

4.21 Special operation and frequency control

Purpose	Parameter that must be Set		Refer to Page
Switch between the inverter operation and bypass operation to operate.	**Bypass-inverter switchover function**	**Pr. 57, Pr.58, Pr. 135 to Pr. 139, Pr. 159**	293
Avoid overvoltage alarm due to regeneration by automatic adjustment of output frequency	**Regeneration avoidance function**	**Pr. 665, Pr. 882 to Pr. 886**	298

4.21.1 Bypass-inverter switchover function (Pr. 57, Pr. 58, Pr. 135 to Pr. 139, Pr. 159)

The complicated sequence circuit for bypass operation is built in the inverter. Hence, merely inputting the start, stop or automatic switchover selection signal facilitates the interlock operation of the switchover magnetic contactor.

Parameter Number	Name	Initial Value	Setting Range 200V class (400V class)		Description
57	**Restart coasting time**	9999	0		· FR-F720-00077 (FR-F740-00038) or less ..... 0.5s, · FR-F720-00105 to 00340 (FR-F740-00052 to 00170) ..... 1s, · FR-F720-00490 to 02330 (FR-F740-00250 to 01160)..... 3.0s, · FR-F720-03160 (FR-F740-01800) or more..... 5.0s, The above times are coasting time.
			02330 (01160) or less	0.1 to 5s	Set the waiting time for inverter-triggered restart after an instantaneous power failure.
			03160 (01800) or more	0.1 to 30s	
			9999		No restart
58	**Restart cushion time**	1s	0 to 60s		Set a voltage starting time at restart.
135	**Electronic bypass sequence selection**	0	0		Without electronic bypass sequence
			1		With electronic bypass sequence
136	**MC switchover interlock time**	1s	0 to 100s		Set the operation interlock time of MC2 and MC3.
137	**Start waiting time**	0.5s	0 to 100s		Set the time slightly longer (0.3 to 0.5s or so) than the time from when the ON signal enters MC3 until it actually turns ON.
138	**Bypass selection at a fault**	0	0		Inverter output is stopped (motor coast) at inverter fault.
			1		Operation is automatically switched to bypass operation at inverter fault (Not switched when an external thermal relay operation (E.OHT) or CPU fault (E.CPU) occurs).
139	**Automatic switchover frequency from inverter to bypass operation**	9999	0 to 60Hz		Set the frequency to switch inverter operation to bypass operation. Inverter operation is performed from a start until *Pr. 139* is reached, and when the output frequency is at or above *Pr. 139*, inverter operation is automatically switched to bypass operation.
			9999		Without automatic switchover
159	**Automatic switchover frequency range from bypass to inverter operation**	9999	0 to 10Hz		Valid during automatic switchover operation (*Pr. 139* ≠ 9999) When the frequency command decreases below (*Pr. 139* - *Pr. 159*) after operation is switched from inverter operation to bypass operation, the inverter automatically switches operation to inverter operation and operates at the frequency of frequency command. When the inverter start command (STF/STR) is turned OFF, operation is switched to inverter operation also.
			9999		Valid during automatic switchover operation (*Pr. 139* ≠ 9999) When the inverter start command (STF/STR) is turned OFF after operation is switched from inverter operation to bypass operation, operation is switched to inverter operation and the motor decelerates to stop.

The above parameters can be set when *Pr. 160 User group read selection* = "0". *(Refer to page 190.)*

- When the motor is operated at 60Hz (or 50Hz), more efficient operation can be performed by the commercial power supply than by the inverter. When the motor cannot be stopped for a long time for the maintenance/inspection of the inverter, it is recommended to provide the commercial power supply circuit.
- To avoid commercial power supply being applied to the inverter output side when switching between inverter operation and commercial power supply operation, provide an interlock which the MC of the commercial power supply side turns ON only when the MC of the inverter output side is OFF. Using the electronic bypass sequence function that outputs the timing signal for operation of the magnetic contactor, a complicated commercial power supply switchover interlock can be provided by the inverter.

(1) Connection diagram

- The following shows the connection diagram of a typical electronic bypass sequence. Sink logic, *Pr. 185* = "7", *Pr. 192* = "17", *Pr. 193* = "18", *Pr. 194* = "19"

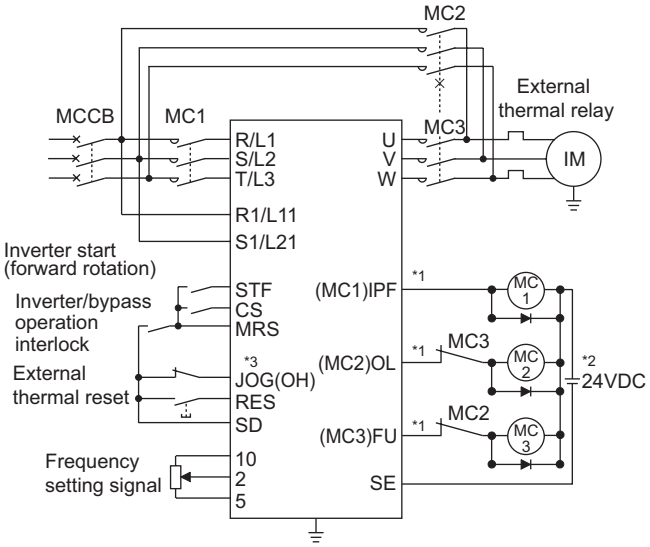

Electronic bypass sequence connection diagram

*1 Take caution for the capacity of the sequence output terminal. The used terminal changes depending on the setting of *Pr. 190 to Pr. 196 (output terminal function selection)*.

Output Terminal Capacity	Output Terminal Permissible Load
Inverter open collector output (RUN, SU, IPF, OL, FU)	24VDC 0.1A
Inverter relay output (A1 and C1, B1 and C1, A2 and B2, B2 and C2) Relay output option (FR-A7AR)	230VAC 0.3A 30VDC 0.3A

*2 When connecting a DC power supply, insert a protective diode. When connecting an AC power supply, connect a relay output option (FR-A7AR) and use a contact output.

*3 The used terminal changes depending on the setting of *Pr. 180 to Pr. 189 (input terminal function selection)*.

CAUTION

- Use the bypass operation function in External operation mode. Be sure to connect the other power supply since the function is not performed normally unless the connection terminals R1/L11, S1/L21 are not connected to the other power supply (power supply that does not pass MC1).
- Be sure to provide mechanical interlocks for MC2 and MC3.

- Operations of magnetic contactors (MC1, MC2, MC3)

Magnetic Contactor	Installation Place	Operation (○: Shorted, ×: Open)		
		Bypass operation	During inverter operation	At an inverter fault occurrence
MC1	Between power supply and inverter input	○	○	× (Shorted by reset)
MC2	Between power supply and motor	○	×	× (Can be selected using *Pr. 138*, always open when external thermal relay is ON)
MC3	Between inverter output and motor	×	○	×

· The input signals are as indicated below.

Signal	Terminal Used	Function	Operation	MC Operation *6		
				MC1 *5	MC2	MC3
MRS	MRS	Operation enable/disable selection *1	ON ..... Bypass-inverter operation enabled	○	—	—
			OFF ... Bypass-inverter operation disabled	○	×	No change
CS	CS	Inverter/bypass *2	ON..... Inverter operation	○	×	○
			OFF ... Bypass operation	○	○	×
STF (STR)	STF(STR)	Inverter operation command (Invalid for bypass) *3	ON..... Forward rotation (reverse rotation)	○	×	○
			OFF.... Stop	○	×	○
OH	Set "7" in any of *Pr. 180 to Pr. 189*.	External thermal relay input	ON ..... Motor normal	○	—	—
			OFF.... Motor abnormal	×	×	×
RES	RES	Operating status initialization *4	ON..... Initialization	No change	×	No change
			OFF.... Normal operation	○	—	—

*1 Unless the MRS signal is turned ON, neither bypass operation nor inverter operation can be performed.
*2 The CS signal functions only when the MRS signal is ON.
*3 STF (STR) functions only when both the MRS signal and CS signal are ON.
*4 The RES signal enables reset input acceptance selection using *Pr. 75 Reset selection/disconnected PU detection/PU stop selection*.
*5 MC1 turns OFF when an inverter fault occurs.
*6 MC operation
○ : MC-ON
× : MC-OFF
— : Inverter operation..... MC2 is OFF and MC3 is ON
Bypass operation ..... MC2 is ON and MC3 is OFF
No change : The status before the signal turns ON or OFF is held.

· The output signals are as indicated below.

Signal	Terminal Used (*Pr. 190 to Pr. 196* setting)	Description
MC1	17	Control signal output of inverter input side magnetic contactor MC1
MC2	18	Control signal output of bypass operation magnetic contactor MC2
MC3	19	Control signal output of inverter output side magnetic contactor MC3

(2) Electronic bypass operation sequence

· Operation sequence example when there is no automatic switchover sequence (*Pr. 139* = "9999")

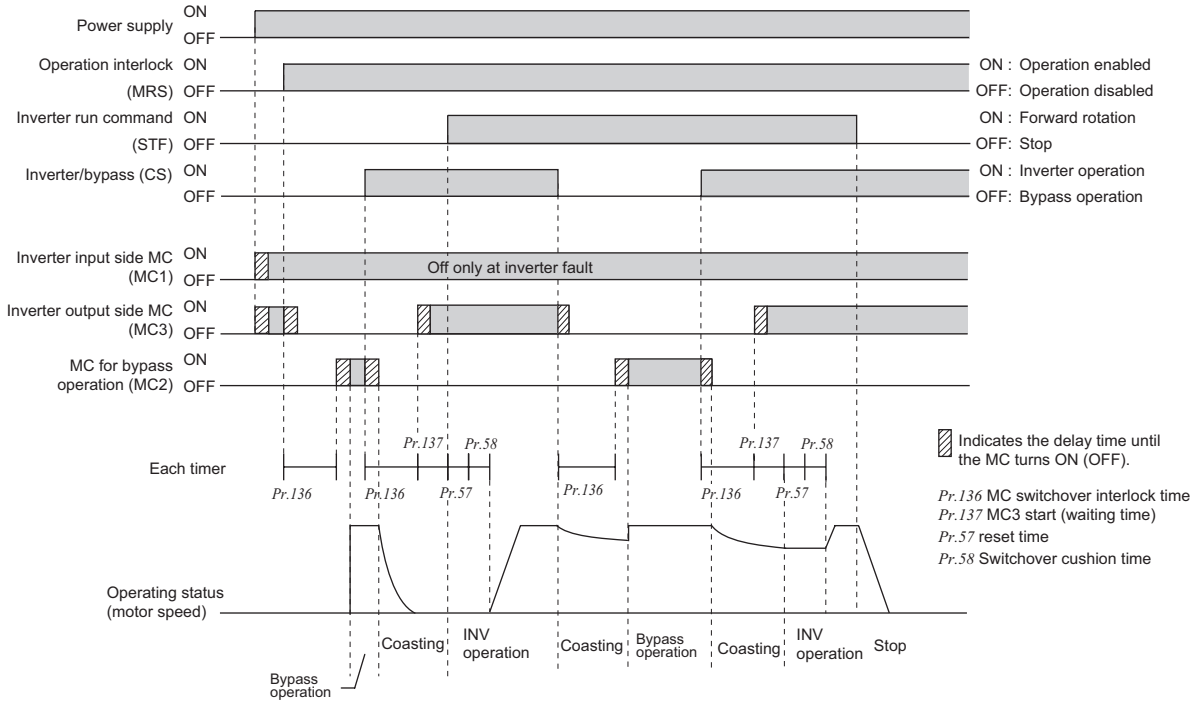

· Operation sequence example when there is automatic switchover sequence (*Pr. 139* ≠ "9999", *Pr. 159* = "9999")

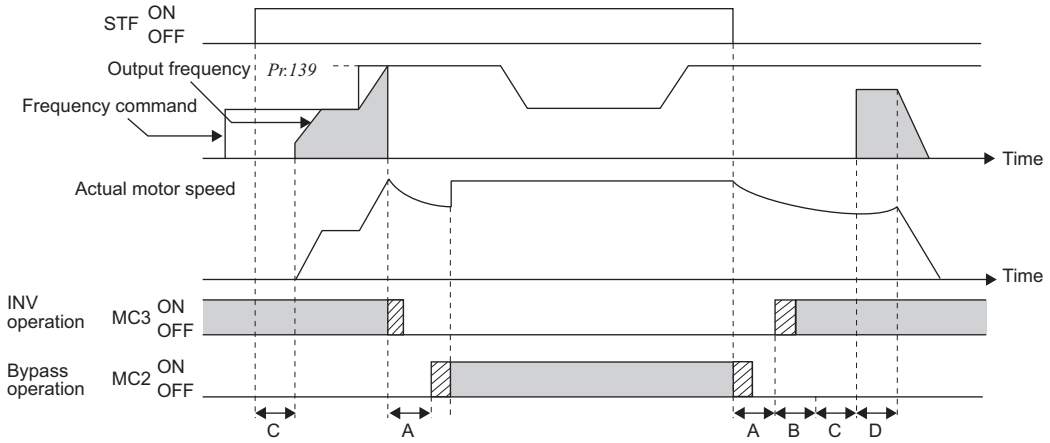

A : *Pr.136* MC switchover interlock time
B : *Pr.137* Start waiting time
C : *Pr.57* Restart coasting time
D : *Pr.58* Restart cushion time

· Operation sequence example when there is automatic switchover sequence (*Pr. 139* ≠ "9999", *Pr. 159* ≠ "9999")

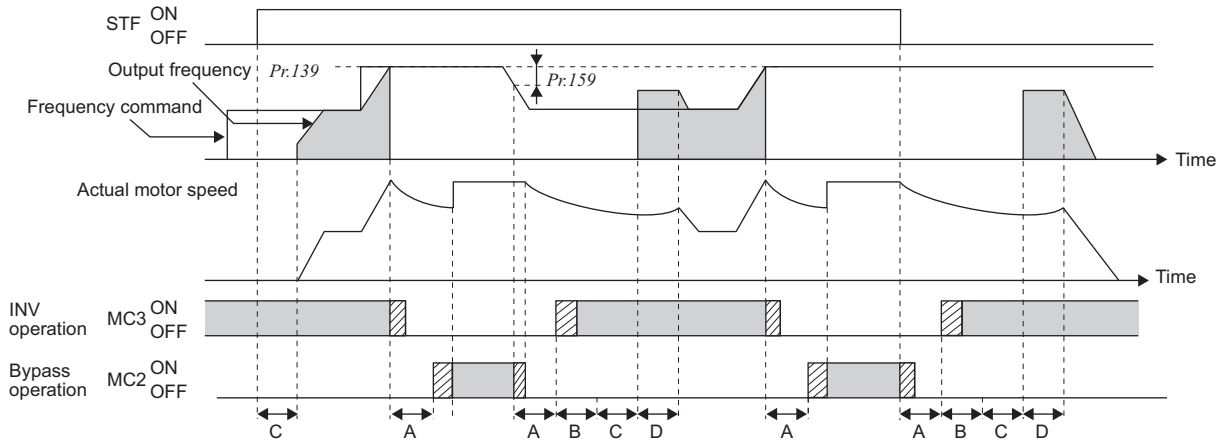

A : *Pr.136* MC switchover interlock time
B : *Pr.137* Start waiting time
C : *Pr.57* Restart coasting time
D : *Pr.58* Restart cushion time

(3) Operating procedure

· Procedure for operation
Operation pattern

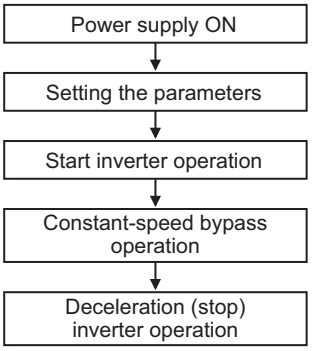

- *Pr. 135* = "1" (open collector output terminal of inverter)
- *Pr. 136* = "2.0s"
- *Pr. 137* = "1.0s" (Set the time longer than the time from when MC3 actually turns ON until the inverter and motor are connected. If the time is short, a restart may not function properly.)
- *Pr. 57* = "0.5s"
- *Pr. 58* = "0.5s" (Be sure to set this parameter when bypass operation is switched to inverter operation.)

2)Signal ON/OFF after parameter setting

	MRS	CS	STF	MC1	MC2	MC3	Remarks
Power supply ON	OFF (OFF)	OFF (OFF)	OFF (OFF)	OFF → ON (OFF → ON)	OFF (OFF)	OFF → ON (OFF → ON)	External operation mode (PU operation mode)
At start (inverter)	OFF → ON	OFF → ON	OFF → ON	ON	OFF	ON	
At constant speed (commercial power supply)	ON	ON → OFF	ON	ON	OFF → ON	ON → OFF	MC2 turns ON after MC3 turns OFF (coasting status during this period) Waiting time 2s
Switched to inverter for deceleration (inverter)	ON	OFF → ON	ON	ON	ON → OFF	OFF → ON	MC3 turns ON after MC2 turns OFF (coasting status during this period) Waiting time 4s
Stop	ON	ON	ON → OFF	ON	OFF	ON	

CAUTION

- Connect the control power supply (R1/L11, S1/L21) in front of input side MC1. If the control power supply is connected behind input side MC1, the electronic bypass sequence function is not executed.
- The electronic bypass sequence function is valid only when *Pr. 135* = "1" in the external operation or combined operation mode (PU speed command, external operation command *Pr. 79* = "3"). When *Pr. 135* = "1" in the operation mode other than the above, MC1 and MC3 turn ON.
- When the MRS and CS signals are ON and the STF (STR) signal is OFF, MC3 is ON, but when the motor was coasted to a stop from bypass operation last time, a start is made after the time set to *Pr. 137* has elapsed.
- Inverter operation can be performed when the MRS, STF (STR) and CS signals turn ON. In any other case (MRS signal - ON), bypass operation is performed.
- When the CS signal is turned OFF, the motor switches to bypass operation. However, when the STF (STR) signal is turned OFF, the motor is decelerated to a stop in the inverter operation mode.
- When both MC2 and MC3 are OFF and either MC2 or MC3 is then turned ON, there is a waiting time set in *Pr. 136*.
- If electronic bypass sequence is valid (*Pr. 135* = "1"), the *Pr. 136 and Pr. 137* settings are ignored in the PU operation mode. The input terminals (STF, CS, MRS, OH) of the inverter return to their normal functions.
- When the electronic bypass sequence function (*Pr. 135* = "1") and PU operation interlock function (*Pr. 79* = "7") are used simultaneously, the MRS signal is shared by the PU operation external interlock signal unless the X12 signal is assigned. (When the MRS and CS signals turn ON, inverter operation is enabled)
- Changing the terminal function using any of *Pr. 178 to Pr. 189, 190 to Pr. 196* may affect the other functions. Please set parameters after confirming the function of each terminal.

♦ Parameters referred to ♦

Pr. 11 DC injection brake operation time ☞ *Refer to page 112*
Pr. 57 Restart coasting time ☞ *Refer to page 152*
Pr. 58 Restart cushion time ☞ *Refer to page 152*
Pr. 79 Operation mode selection ☞ *Refer to page 195*
Pr. 178 to Pr. 189 (Input terminal function selection) ☞ *Refer to page 122*
Pr. 190 to Pr. 196 (Output terminal function selection) ☞ *Refer to page 128*

4.21.2 Regeneration avoidance function (Pr. 665, Pr. 882 to Pr. 886)

This function detects a regeneration status and increases the frequency to avoid the regeneration status.

●Possible to avoid regeneration by automatically increasing the frequency and continue operation if the fan happens to rotate faster than the set speed due to the effect of another fan in the same duct.

Parameter Number	Name	Initial Value	Setting Range	Description
882	Regeneration avoidance operation selection	0	0	Regeneration avoidance function invalid
			1	Regeneration avoidance function valid
			2	Regeneration avoidance function is valid only during a constant speed operation
883	Regeneration avoidance operation level	380VDC/ 760VDC *	300 to 800V	Set the bus voltage level at which regeneration avoidance operates. When the bus voltage level is set to low, overvoltage error will be less apt to occur. However, the actual deceleration time increases. The set value must be higher than the power supply voltage × $\sqrt{2}$. * The initial value differs according to the voltage level. (200V / 400V)
884	Regeneration avoidance at deceleration detection sensitivity	0	0	Regeneration avoidance by bus voltage change ratio is invalid
			1 to 5	Set sensitivity to detect the bus voltage change ratio Setting 1 ⟶ 5 Detection sensitivity low ⟶ high
885 Ver.UP	Regeneration avoidance compensation frequency limit value	6Hz	0 to 30Hz	Set the limit value of frequency which rises at activation of regeneration avoidance function.
			9999	Frequency limit invalid
886	Regeneration avoidance voltage gain	100%	0 to 200%	Adjust responsiveness at activation of regeneration avoidance. A larger setting will improve responsiveness to the bus voltage change. However, the output frequency could become unstable. When vibration is not suppressed by decreasing the *Pr. 886* setting, set a smaller value in *Pr. 665*.
665 Ver.UP	Regeneration avoidance frequency gain	100%	0 to 200%	

The above parameters can be set when *Pr. 160 User group read selection* = "0". *(Refer to page 190)*

Ver.UP ….Specifications differ according to the date assembled. *Refer to page 400* to check the SERIAL number.

(1) What is regeneration avoidance function? *(Pr. 882, Pr. 883)*

- When the regeneration status is serious, the DC bus voltage rises and an overvoltage fault (E. OV□) may occur. When this bus voltage rise is detected and the bus voltage level reaches or exceeds *Pr. 883*, increasing the frequency avoids the regeneration status.
- The regeneration avoidance operation, you can select whether it is always activated or activated only a constant speed.

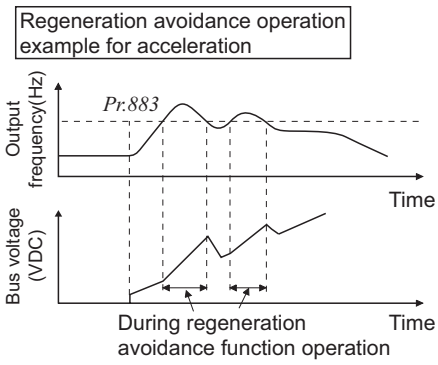

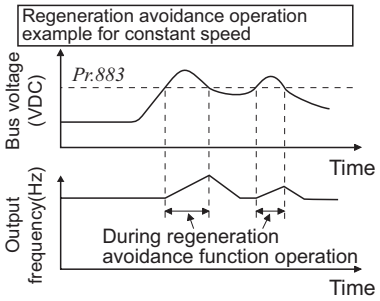

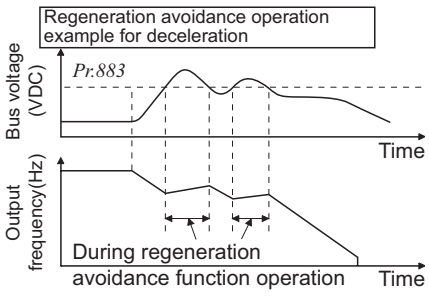

- Setting *Pr. 882* to "1, 2" validates the regeneration avoidance function.

REMARKS

- The inclination of the frequency increased or decreased by the regeneration avoidance function changes depending on the regeneration status.
- The DC bus voltage of the inverter is normally about $\sqrt{2}$ times greater than the input voltage.
  When the input voltage is 220VAC, the bus voltage is about 311VDC.
  When the input voltage is 440VAC, the bus voltage is about 622VDC.
  However, it varies with the input power waveform.
- The *Pr. 883* setting should be kept higher than the DC bus voltage level. Otherwise, the regeneration avoidance function is always ON even in the non-regeneration status and the frequency increases.
- While overvoltage stall (oL) is activated only during deceleration and stops the decrease in output frequency, the regeneration avoidance function is always ON (*Pr. 882* = 1) or activated only during a constant speed (*Pr. 882* = 2) and increases the frequency according to the regeneration amount.
- Note that when coping parameters to the inverter without this function (inverter assembled in and before September 2005), copied *Pr.882* ="2" is regarded as *Pr.882* ="0"(regeneration avoidance function invalid).

(2) To detect the regeneration status during deceleration faster *(Pr. 884)*

- As the regeneration avoidance function cannot respond to an abrupt voltage change by detection of the bus voltage level, the ratio of bus voltage change is detected to stop deceleration if the bus voltage is less than *Pr. 883 Regeneration avoidance operation level*.
  Set that detectable bus voltage change ratio to *Pr. 884* as detection sensitivity.
  Increasing the setting raises the detection sensitivity

CAUTION

Too small setting (low detection sensitivity) will disable detection, and too large setting will turn ON the regeneration avoidance function if the bus voltage is varied by an input power change, etc.

(3) Limit regeneration avoidance operation frequency *(Pr. 885)*

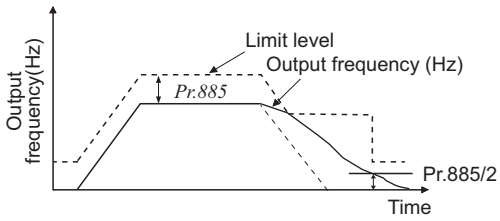

You can limit the output frequency compensated for (increased) by the regeneration avoidance function.

- The frequency is limited to the output frequency (frequency prior to regeneration avoidance operation) + *Pr. 885 Regeneration avoidance compensation frequency limit value* during acceleration or constant speed. If the frequency increased by regeneration avoidance function exceeds the limit value during deceleration, the limit value is held until the output frequency falls to 1/2 of *Pr. 885*.
- When the frequency increased by regeneration avoidance function has reached *Pr. 1 Maximum frequency*, it is limited to the maximum frequency.
- *Pr. 885* is set to "9999", regeneration avoidance function operation frequency setting is invalid.

(4) Regeneration avoidance function adjustment *(Pr. 665, Pr. 886)*

- If the frequency becomes unstable during regeneration avoidance operation, decrease the setting of *Pr. 886 Regeneration avoidance voltage gain*. Reversely, if sudden regeneration causes an overvoltage fault, increase the setting.
  When vibration is not suppressed by decreasing the *Pr. 886* setting, set a smaller value in *Pr. 665 Regeneration avoidance frequency gain*.

CAUTION

- When regeneration avoidance operation is performed, OL (overvoltage stall) is displayed and the OL signal is output. Set theoperation pattern at an OL signal output using *Pr. 156 Stall prevention operation selection*. Set the output timing of the OL signalusing *Pr. 157 OL signal output timer*.
- When regeneration avoidance operation is performed, stall prevention is also activated.
- The regeneration avoidance function cannot shorten the actual deceleration time taken to stop the motor. The actual deceleration time depends on the regenerative energy consumption capability. When shortening the deceleration time, consider using the regeneration unit (FR-BU2, BU, FR-BU, MT-BU5, FR-CV, FR-HC, MT-HC) to consume regenerative energy at constant speed.
- When using a regeneration unit (FR-BU2, BU, FR-BU, MT-BU5, FR-CV, FR-HC, MT-HC) to consume regenerative energy at constant speed, set *Pr. 882* = "0 (initial value)" (Regenerative avoidance function invalid). When using the regeneration unit, etc. to consume regenerative energy at deceleration, set *Pr. 882* = "2" (regeneration avoidance function valid only at a constant speed).

♦ Parameters referred to ♦

Pr. 1 Maximum frequency ☞ *Refer to page 87*
Pr. 8 Deceleration time ☞ *Refer to page 101*
Pr. 22 Stall prevention operation level ☞ *Refer to page 81*

4.22 Useful functions

Purpose	Parameter that must be Set		Refer to Page
Increase cooling fan life	**Cooling fan operation selection**	**Pr. 244**	300
To determine the maintenance time of parts.	**Inverter part life display**	**Pr. 255 to Pr. 259**	301
	Maintenance output function	**Pr. 503, Pr. 504**	304
	Current average value monitor signal	**Pr. 555 to Pr. 557**	305
Freely available parameter	**Free parameter**	**Pr. 888, Pr. 889**	307
To initiate a fault alarm	**Fault initiation**	**Pr. 997**	308
To save time for parameter setting	**Automatic parameter setting**	**Pr. 999**	309

4.22.1 Cooling fan operation selection (Pr. 244)

You can control the operation of the cooling fan (FR-F720-00105 or more, FR-F740-00083 or more) built in the inverter.

Parameter Number	Name	Initial Value	Setting Range	Description
244	**Cooling fan operation selection**	1	0	Operates at power ON Cooling fan ON/OFF control invalid (The cooling fan is always ON at power ON)
			1	Cooling fan ON/OFF control valid The fan is always ON while the inverter is running. During a stop, the inverter status is monitored and the fan switches ON-OFF according to the temperature.

The above parameters can be set when *Pr. 160 User group read selection* = "0". *(Refer to page 190)*

- In either of the following cases, fan operation is regarded as faulty, [FN] is shown on the operation panel, and the fan alarm output (FAN) and alarm (LF) signals are output.
  - *Pr. 244* = "0"
    When the fan comes to a stop with power ON.
  - *Pr. 244* = "1"
    When the fan stops during the fan ON command while the inverter is running.
- For the terminal used for the FAN signal output, set "25" (positive logic) or "125" (negative logic) in any of *Pr. 190 to Pr. 196 (output terminal function selection)*, and for the LF signal, set "98" (positive logic) or "198" (negative logic).

CAUTION

- Changing the terminal assignment using *Pr. 190 to Pr. 196 (output terminal function selection)* may affect the other functions. Please set parameters after confirming the function of each terminal.

♦ Parameters referred to ♦

Pr. 190 to Pr. 196 (output terminal function selection) ☞ *Refer to page 128*

4.22.2 Display of the life of the inverter parts (Pr. 255 to Pr .259)

Degrees of deterioration of main circuit capacitor, control circuit capacitor, cooling fan and inrush current limit circuit can be diagnosed by monitor.
When any part has approached the end of its life, an alarm can be output by self diagnosis to prevent a fault.
(Use the life check of this function as a guideline since the life except the main circuit capacitor is calculated theoretically.)
For the life check of the main circuit capacitor, the alarm signal (Y90) will not be output if a measuring method of (4) is not performed.

Parameter Number	Name	Initial Value	Setting Range	Description
255	**Life alarm status display**	0	(0 to 15)	Displays whether the control circuit capacitor, main circuit capacitor, cooling fan, and each parts of the inrush current limit circuit has reached the life alarm output level or not. Reading only
256	**Inrush current limit circuit life display**	100%	(0 to 100%)	Displays the deterioration degree of the inrush current limit circuit. Reading only
257	**Control circuit capacitor life display**	100%	(0 to 100%)	Displays the deterioration degree of the control circuit capacitor. Reading only
258	**Main circuit capacitor life display**	100%	(0 to 100%)	Displays the deterioration degree of the main circuit capacitor. Reading only Displays the value measured by *Pr. 259*.
259	**Main circuit capacitor life measuring**	0	0, 1 (2, 3, 8, 9)	Setting "1" and switching the power supply OFF starts the measurement of the main circuit capacitor life. When the *Pr. 259* value is "3" after powering ON again, the measuring is completed. Reads the deterioration degree in *Pr. 258*.

The above parameters can be set when *Pr. 160 User group read selection* = "0". *(Refer to page 190.)*

REMARKS

- Since repeated inrush currents at power ON will shorten the life of the converter circuit, frequent starts and stops of the magnetic contactor must be avoided.

(1) Life alarm display and signal output (Y90 signal, *Pr. 255*)

- Whether any of the control circuit capacitor, main circuit capacitor, cooling fan and inrush current limit circuit has reached the life alarm output level or not can be checked by *Pr. 255 Life alarm status display* and life alarm signal (Y90).

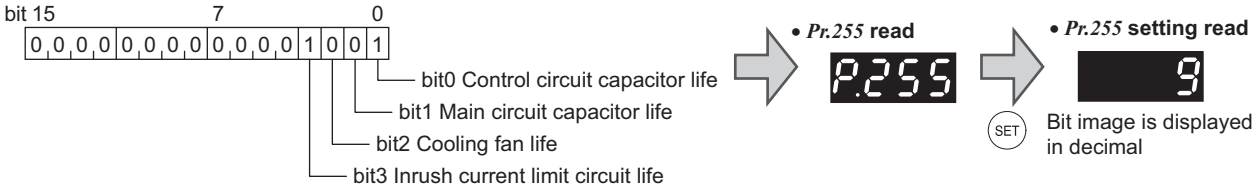

Pr. 255 (decimal)	Bit (binary)	Inrush Current Limit Circuit Life	Cooling Fan Life	Main Circuit Capacitor Life	Control Circuit Capacitor Life
15	1111	○	○	○	○
14	1110	○	○	○	×
13	1101	○	○	×	○
12	1100	○	○	×	×
11	1011	○	×	○	○
10	1010	○	×	○	×
9	1001	○	×	×	○
8	1000	○	×	×	×
7	0111	×	○	○	○
6	0110	×	○	○	×
5	0101	×	○	×	○
4	0100	×	○	×	×
3	0011	×	×	○	○
2	0010	×	×	○	×
1	0001	×	×	×	○
0	0000	×	×	×	×

○: With warnings, ×: Without warnings

- The life alarm signal (Y90) turns ON when any of the control circuit capacitor, main circuit capacitor, cooling fan and inrush current limit circuit reaches the life alarm output level.
- For the terminal used for the Y90 signal, set "90" (positive logic) or "190" (negative logic) in any of *Pr. 190 to Pr. 196 (output terminal function selection)*.

REMARKS

- The digital output option (FR-A7AY, FR-A7AR, FR-A7NC) allows the control circuit capacitor life signal (Y86), main circuit capacitor life signal (Y87), cooling fan life signal (Y88) and inrush current limit circuit life signal (Y89) to be output individually.

CAUTION

- Changing the terminal assignment using *Pr. 190 to Pr. 196 (output terminal function selection)* may affect the other functions. Please set parameters after confirming the function of each terminal.

(2) Life display of the inrush current limit circuit *(Pr. 256)*

- The life of the inrush current limit circuit (relay, contactor and inrush resistor) is displayed in *Pr. 259*.
- The number of contact (relay, contactor, thyristor) ON times is counted, and it is counted down from 100% (0 times) every 1%/10,000 times. As soon as 10% (900,000 times) is reached, *Pr. 255* bit 3 is turned ON and also an alarm is output to the Y90 signal.

(3) Control circuit capacitor life display *(Pr. 257)*

- The deterioration degree of the control circuit capacitor is displayed in *Pr. 257* as a life.
- In the operating status, the control circuit capacitor life is calculated from the energization time and temperature, and is counted down from 100%. As soon as the control circuit capacitor life falls below 10%, *Pr. 255* bit 0 is turned ON and also an alarm is output to the Y90 signal.

(4) Main circuit capacitor life display *(Pr. 258, Pr. 259)*

- The deterioration degree of the main circuit capacitor is displayed in *Pr. 258* as a life.
- On the assumption that the main circuit capacitor capacitance at factory shipment is 100%, the capacitor life is displayed in *Pr. 258* every time measurement is made. When the measured value falls to or below 85%, *Pr. 255* bit 1 is turned ON and also an alarm is output to the Y90 signal.
- Measure the capacitor capacity according to the following procedure and check the deterioration level of the capacitor capacity.
  1) Check that the motor is connected and at a stop.
  2) Set "1" (measuring start) in *Pr. 259*
  3) Switch power OFF. The inverter applies DC voltage to the motor to measure the capacitor capacity while the inverter is OFF.
  4) After making sure that the power lamp is OFF, switch ON the power supply again.
  5) Check that "3" (measuring completion) is set in *Pr. 259*, read *Pr .258*, and check the deterioration degree of the main circuit capacitor.

Pr. 259	Description	Remarks
0	No measurement	Initial value
1	Measurement start	Measurement starts when the power supply is switched OFF.
2	During measurement	Only displayed and cannot be set
3	Measurement complete	
8	Forced end	
9	Measurement error	

REMARKS

- When the main circuit capacitor life is measured under the following conditions, "forced end" (*Pr. 259* = "8") or "measuring error" (*Pr. 259* ="9") occurs or it remains in "measuring start" (*Pr. 259* = "1").
  When measuring, avoid the following conditions beforehand. In addition, even when "measurement completion" (*Pr. 259* = "3") is confirmed under the following conditions, proper measurement cannot be taken.
  (a) The FR-HC, MT-HC, FR-CV, MT-RC or sine wave filter is connected
  (b) Terminals R1/L11, S1/L21 or DC power supply is connected to the terminal P/+ and N/-.
  (c) Switch power ON during measuring.
  (d) The motor is not connected to the inverter.
  (e) The motor is running. (The motor is coasting.)
  (f) The motor capacity is two rank smaller as compared to the inverter capacity.
  (g) The inverter is tripped or a fault occurred while power is OFF.
  (h) The inverter output is shut off with the MRS signal.
  (i) The start command is given while measuring.
- Operating environment: Surrounding air temperature (annual average 40°C (104°F) (free from corrosive gas, flammable gas, oil mist, dust and dirt))
  Output current (80% of the inverter rated current)

POINT

For the accurate life measuring of the main circuit capacitor, perform after more than 3h passed since the turn OFF of the power as it is affected by the capacitor temperature.

⚠ WARNING

⚠ When measuring the main circuit capacitor capacity (*Pr. 259 Main circuit capacitor life measuring* = "1"), the DC voltage is applied to the motor for 1s at powering OFF. Never touch the motor terminal, etc. right after powering OFF to prevent an electric shock.

(5) Cooling fan life display

- The cooling fan speed of 50% or less is detected and "FN" is displayed on the operation panel (FR-DU07) and parameter unit (FR-PU04/FR-PU07). As an alarm display, *Pr. 255* bit 2 is turned ON and also an alarm is output to the Y90 signal.

REMARKS

- When the inverter is mounted with two or more cooling fans, "FN" is displayed with one or more fans with speed of 50% or less.

CAUTION

- For replacement of each part, contact the nearest Mitsubishi FA center.

4.22.3 Maintenance timer alarm (Pr. 503, Pr. 504)

When the cumulative energization time of the inverter reaches the parameter set time, the maintenance timer output signal (Y95) is output. MT (MT) is displayed on the operation panel (FR-DU07).
This can be used as a guideline for the maintenance time of peripheral devices.

Parameter Number	Name	Initial Value	Setting Range	Description
503	**Maintenance timer**	0	0 (1 to 9998)	Displays the cumulative energization time of the inverter in 100h increments. Reading only Writing the setting of "0" clears the cumulative energization time.
504	**Maintenance timer alarm output set time**	9999	0 to 9998	Set the time taken until when the maintenance timer alarm output signal (Y95) is output.
			9999	No function

The above parameters can be set when *Pr. 160 User group read selection* = "0". *(Refer to page 190.)*

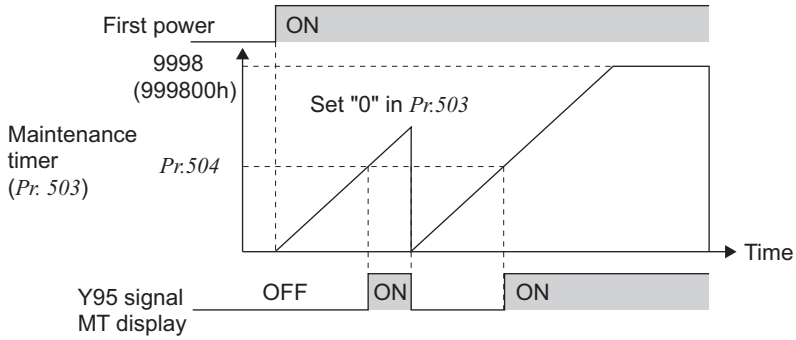

- The cumulative energization time of the inverter is stored into the EEPROM every hour and indicated in *Pr. 503 Maintenance timer* in 100h increments. *Pr. 503* is clamped at 9998 (999800h).
- When the *Pr. 503* value reaches the time set in *Pr. 504 Maintenance timer alarm output set time* (100h increments), the maintenance timer alarm output signal (Y95) is output.
- For the terminal used for the Y95 signal output, assign the function by setting "95" (positive logic) or "195" (negative logic) in any of *Pr. 190 to Pr. 196 (output terminal function selection)*.

CAUTION

- The cumulative energization time is counted every hour. The energization time of less than 1h is not counted.
- Changing the terminal assignment using *Pr. 190 to Pr. 196 (output terminal function selection)* may affect the other functions. Please set parameters after confirming the function of each terminal.

♦ Parameters referred to ♦

Pr. 190 to Pr. 196(output terminal function selection) ☞ *Refer to page 128*

4.22.4 Current average value monitor signal (Pr. 555 to Pr. 557)

The average value of the output current during constant speed operation and the maintenance timer value are output as a pulse to the current average value monitor signal (Y93).
The pulse width output to the I/O module of the programmable controller or the like can be used as a guideline due to abrasion of machines and elongation of belt and for aged deterioration of devices to know the maintenance time.
The current average value monitor signal (Y93) is output as pulse for 20s as 1 cycle and repeatedly output during constant speed operation.

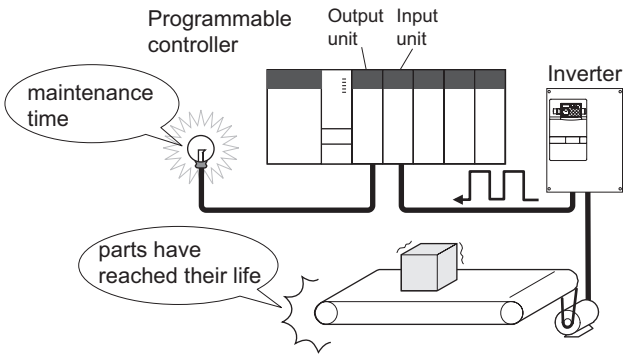

Parameter Number	Name	Initial Value	Setting Range 200V class (400V class)		Description
555	**Current average time**	1s	0.1 to 1.0s		Set the time taken to average the current during start bit output (1s).
556	**Data output mask time**	0s	0.0 to 20.0s		Set the time for not obtaining (mask) transient state data.
557	**Current average value monitor signal output reference current**	Rated inverter current	02330 (01160) or less	0 to 500A	Set the reference (100%) for outputting the signal of the current average value.
			03160 (01800) or more	0 to 3600A	

The above parameters can be set when *Pr. 160 User group read selection*= "0". *(Refer to page 190)*
The above parameters allow its setting to be changed during operation in any operation mode even if "0" (initial value) is set in *Pr. 77 Parameter write selection*.

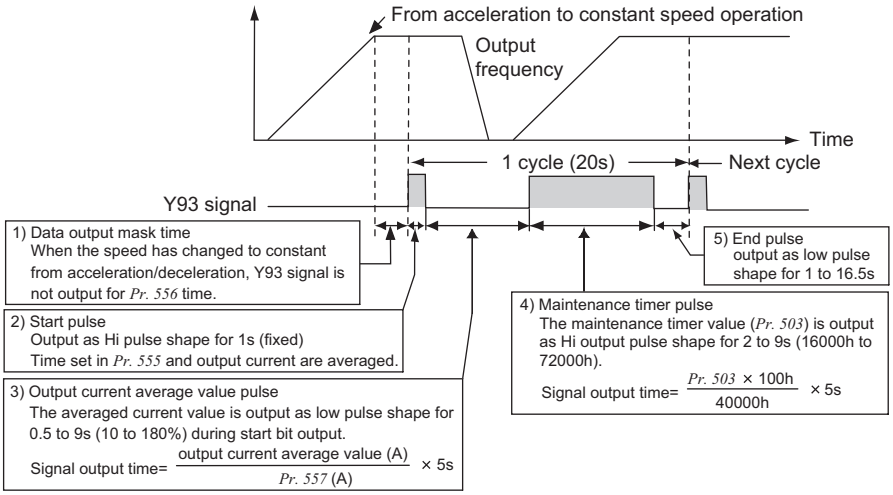

- The pulse output of the current average value monitor signal (Y93) is shown above.
- For the terminal used for the Y93 signal output, assign the function by setting "93" (positive logic) or "193" (negative logic) in any of *Pr. 190 to Pr. 194 (output terminal function selection)*. (The function cannot be assigned to *Pr. 195 ABC1 terminal function selection* and *Pr. 196 ABC2 terminal function selection*.)

(1) Setting of *Pr. 556 Data output mask time*
The output current is unstable (transient state) right after the operation is changed from the acceleration/deceleration state to the constant speed operation. Set the time for not obtaining (mask) transient state data in *Pr. 556*.

(2) Setting of the *Pr. 555 Current average time*
The average output current is calculated during Hi output of start bit (1s). Set the time taken to average the current during start bit output in *Pr. 555*.

(3) Setting of *Pr. 557 Current average value monitor signal output reference current*

Set the reference (100%) for outputting the signal of the current average value. Obtain the time to output the signal from the following calculation.

$$\frac{\textbf{Output current average value}}{\textbf{Pr. 557 setting}} \times \textbf{5s} \quad \textbf{(output current average value 100\%/5s)}$$

Note that the output time range is 0.5 to 9s, and it is 0.5s when the output current average value is less than 10% of the setting value of *Pr. 557* and 9s when exceeds 180%.

Example)When *Pr. 557* = 10A and the average value of output current is 15A
As 15A/10A × 5s = 7.5, the current average value monitor signal is output as low pulse shape for 7.5s.

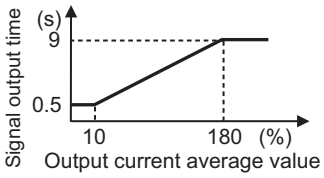

(4) Output of *Pr. 503 Maintenance timer*

After the output current average value is output as low pulse shape, the maintenance timer value is output as high pulse shape. The output time of the maintenance timer value is obtained from the following calculation.

$$\frac{\textbf{Pr. 503} \times \textbf{100}}{\textbf{40000h}} \times \textbf{5s} \quad \textbf{(maintenance timer value 100\%/5s)}$$

Note that the output time range is 2 to 9s, and it is 2s when *Pr. 503* is less than 16000h and 9s when exceeds 72000h.

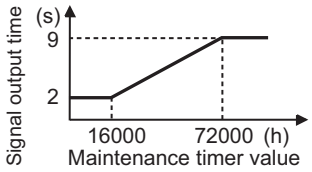

REMARKS

- Mask of data output and sampling of output current are not performed during acceleration/deceleration.
- When the speed is changed to acceleration/deceleration from constant speed during start bit output, the data is judged as invalid, the start bit is output as high pulse shape for 3.5s, and the end signal is output as low pulse shape for 16.5s.
  The signal is output for at least 1 cycle even when acceleration/deceleration state continues after the start bit output is completed.

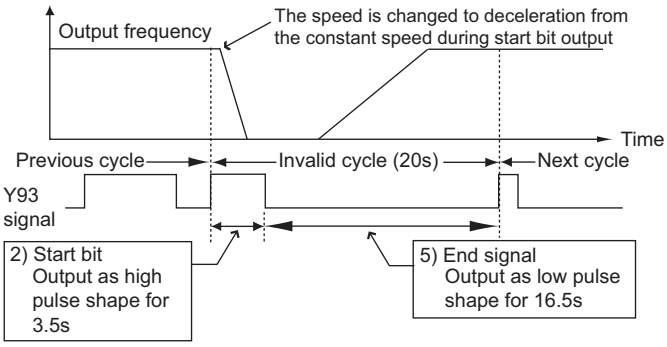

- When the output current value (inverter output current monitor) is 0A on completion of the 1 cycle signal output, the signal is not output until the speed becomes constant next time
- The current average value monitor signal (Y93) is output as low pulse shape for 20s (without data output) under the following condition.
  (a)When the motor is in the acceleration/deceleration state on completion of the 1 cycle signal output
  (b)When 1-cycle signal output was ended during restart operation with the setting of automatic restart after instantaneous power failure (*Pr. 57* ≠ "9999")
  (c)When automatic restart operation was being performed with automatic restart after instantaneous power failure selected (*Pr. 57* ≠ "9999") on completion of the data output mask

CAUTION

- Changing the terminal assignment using *Pr. 190 to Pr. 196 (output terminal function selection)* may affect the other functions. Please set parameters after confirming the function of each terminal.

♦ Parameters referred to ♦

Pr. 190 to Pr. 196(output terminal function selection) ☞ *Refer to page 128*
Pr. 503 Maintenance timer ☞ *Refer to page 304*
Pr. 57 Restart coasting time ☞ *Refer to page 152*

4.22.5 Free parameter (Pr. 888, Pr. 889)

Parameters you can use for your own purposes.
You can input any number within the setting range 0 to 9999.
For example, the number can be used:
- As a unit number when multiple units are used.
- As a pattern number for each operation application when multiple units are used.
- As the year and month of introduction or inspection.

Parameter Number	Name	Initial Value	Setting Range	Description
888	**Free parameter 1**	9999	0 to 9999	Desired values can be input. Data is held even if the inverter power is turned OFF.
889	**Free parameter 2**	9999	0 to 9999	

The above parameters can be set when *Pr. 160 User group read selection* = "0". *(Refer to page 190)*
The above parameters allow its setting to be changed during operation in any operation mode even if "0" (initial value) is set in *Pr. 77 Parameter write selection*.

REMARKS

Pr. 888 and *Pr. 889* do not influence the inverter operation.

4.22.6 Initiating a fault (Pr.997)

A fault is initiated by setting the parameter.
This function is useful to check how the system operates at a fault.

Parameter number	Name	Initial value	Setting range	Description
997 Ver.UP	Fault initiation	9999	16 to 18, 32 to 34, 48, 49, 64, 80 to 82, 96, 112, 128, 129, 144, 145, 160, 161, 162, 164 to 168, 176 to 179, 192 to 194, 196 to 199, 228 to 230, 241, 242, 245 to 247, 253	The setting range is same with the one for fault data codes of the inverter (which can be read through communication). Written data is not stored in EEPROM. When "0" is set, nothing happens.
			9999	The read value is always "9999." This setting does not initiate a fault.

Ver.UP .... The specification differ according to the manufacture date. *Refer to page 400* and check the SERIAL.
The above parameters can be set when *Pr. 160 User group read selection* = "0". *(Refer to page 190)*

(1) Fault initiation *(Pr. 997)*

·To initiate a fault, set the assigned number of the fault you want to initiate in *Pr. 997 Fault initiation*.
·The value set in *Pr. 997 Fault initiation* is not stored in EEPROM.
·When a fault occurs, the inverter trips, and the fault is displayed and output (ALM, ALM2).
·While the initiated fault is occurring, the fault is displayed as the latest fault in the faults history. After a reset, the faults history goes back to the previous status. (The fault generated by the fault initiation function is not saved in the faults history.)
·Perform inverter reset to cancel the fault.

·Setting for *Pr. 997 Fault initiation* and corresponding faults

Setting (Data code)	Fault
16(H10)	OC1
17(H11)	OC2
18(H12)	OC3
32(H20)	OV1
33(H21)	OV2
34(H22)	OV3
48(H30)	THT
49(H31)	THM
64(H40)	FIN
80(H50)	IPF
81(H51)	UVT
82(H52)	ILF
96(H60)	OLT
112(H70)	BE
128(H80)	GF
129(H81)	LF

Setting (Data code)	Fault
144(H90)	OHT
145(H91)	PTC
160(HA0)	OPT
161(HA1)	OP1
162(HA2)	OP2
164(HA4)	E.16*
165(HA5)	E.17*
166(HA6)	E.18*
167(HA7)	E.19*
168(HA8)	E.20*
176(HB0)	PE
177(HB1)	PUE
178(HB2)	RET
179(HB3)	PE2
192(HC0)	CPU
193(HC1)	CTE

Setting (Data code)	Fault
194(HC2)	P24
196(HC4)	CDO
197(HC5)	IOH
198(HC6)	SER
199(HC7)	AIE
228(HE4)	LCI
229(HE5)	PCH
230(HE6)	PID
241(HF1)	E.1
242(HF2)	E.2
245(HF5)	E.5
246(HF6)	E.6
247(HF7)	E.7
253(HFD)	E.13

* Refer to the FR-F700 PLC function programming manual for details of the PLC function.

REMARKS

- If a fault is already occurring in the inverter, a fault cannot be initiated by *Pr. 997*.
- The retry function is invalid for the fault initiated by the fault initiation function.
- If another fault occurs after a fault has been initiated, the fault indication does not change. The fault is not saved in the faults history either.

4.22.7 Setting multiple parameters as a batch (Pr.999)

- Parameter settings are changed as a batch. Those include parameter settings for the extended PID display, the Mitsubishi human machine interface (GOT) connection, rated frequency settings of 50Hz/60Hz, and acceleration/deceleration time increment settings.
- Multiple parameters are changed automatically. Users do not have to consider each parameter number. (Parameter setting mode)

Parameter Number	Name	Initial value	Setting range	Description
999 Ver.UP	Automatic parameter setting	9999	1	Normal PID setting
			2	Extended PID setting
			10	GOT initial setting (PU connector)
			11	GOT initial setting (RS-485 terminals)
			20	50Hz rated frequency
			21	60Hz rated frequency
			30	Acceleration/deceleration time (0.1s increment)
			31	Acceleration/deceleration time (0.01s increment)
			9999	No action

Ver.UP ….Specifications differ according to the date assembled. *Refer to page 400* to check the SERIAL number.

(1) Automatic parameter setting *(Pr.999)*

·Select which parameters to be automatically set, and set that to *Pr. 999*. Multiple parameter settings are changed automatically. *Refer to page 312* for the list of parameters that are changed automatically.

Pr.999 setting	Description		Operation in the parameter setting mode
1	Automatically applies the normal PID display settings in parameters		"AUTO" → "PId" → Write "1"
2	Automatically applies the extended PID display settings in parameters		"AUTO" → "PId" → Write "2"
10	Automatically sets the communication parameters for the GOT connection with a PU connector		"AUTO" → "GOT" → Write "1"
11	Automatically sets the communication parameters for the GOT connection with RS-485 terminals		—
20	50Hz rated frequency	Sets the related parameters of the rated frequency according to the power supply frequency	"AUTO" → "F50" → Write "1"
21	60Hz rated frequency		—
30	0.1s increment	Changes the setting increments of acceleration/deceleration time parameters without changing acceleration/deceleration settings	—
31	0.01s increment		"AUTO" → "T0.01" → Write "1"

REMARKS

If the automatic setting is performed, the selected settings including the changed parameter settings will be changed.

(2) Automatic parameter setting using the operation panel (parameter setting mode)

Operation example | Automatically apply the extended PID display settings in parameters

Operation	Display
1.Screen at powering on The monitor display appears.	0.00 Hz MON P.RUN EXT PU NET REV FWD
2.Press PU/EXT choose the PU operation mode.	PU indication is lit. 0.00 PU EXT NET
3.Press MODE to choose the parameter setting mode.	P. 0 (The parameter number read previously appears.)
4.Turn dial until AUTO (AUTO) appears.	AUTO
5.Press SET to enter the automatic parameter setting mode.	A---
6.Turn dial until PId (PID) appears.	PId
7.Press SET to read the present set value. " 0 " appears.	0
8.Turn dial to change it to the set value "2".	2
9.Press SET set.	2 PId

Flicker · · · Parameter setting complete!!

- Turn dial to read another parameter.
- Press SET to show the setting again.
- Press SET twice to show the next parameter.

Pr.999 setting	Description	Operation in the parameter setting mode
2	Extended PID display increment setting	AUTO(AUTO) → PId(PId) → Write "2"
10	GOT initial setting (PU connector)	AUTO(AUTO) → GOT(GOT) → Write "1"
20	50Hz rated frequency	AUTO(AUTO) → F50(F50) → Write "1"
31	Acceleration/deceleration time (0.01s increment)	AUTO(AUTO) → T0.01(T0.01) → Write "1"

? 1 ⇄ Er4 are displayed alternately ... Why?

☞The inverter is not in the PU operation mode.

1.Press PU/EXT .

PU is lit and the monitor (4-digit LED) displays "0." (When *Pr.79*="0 (initial setting)")

2.Carry out operation from step 3 again.

(3) Parameter setting mode

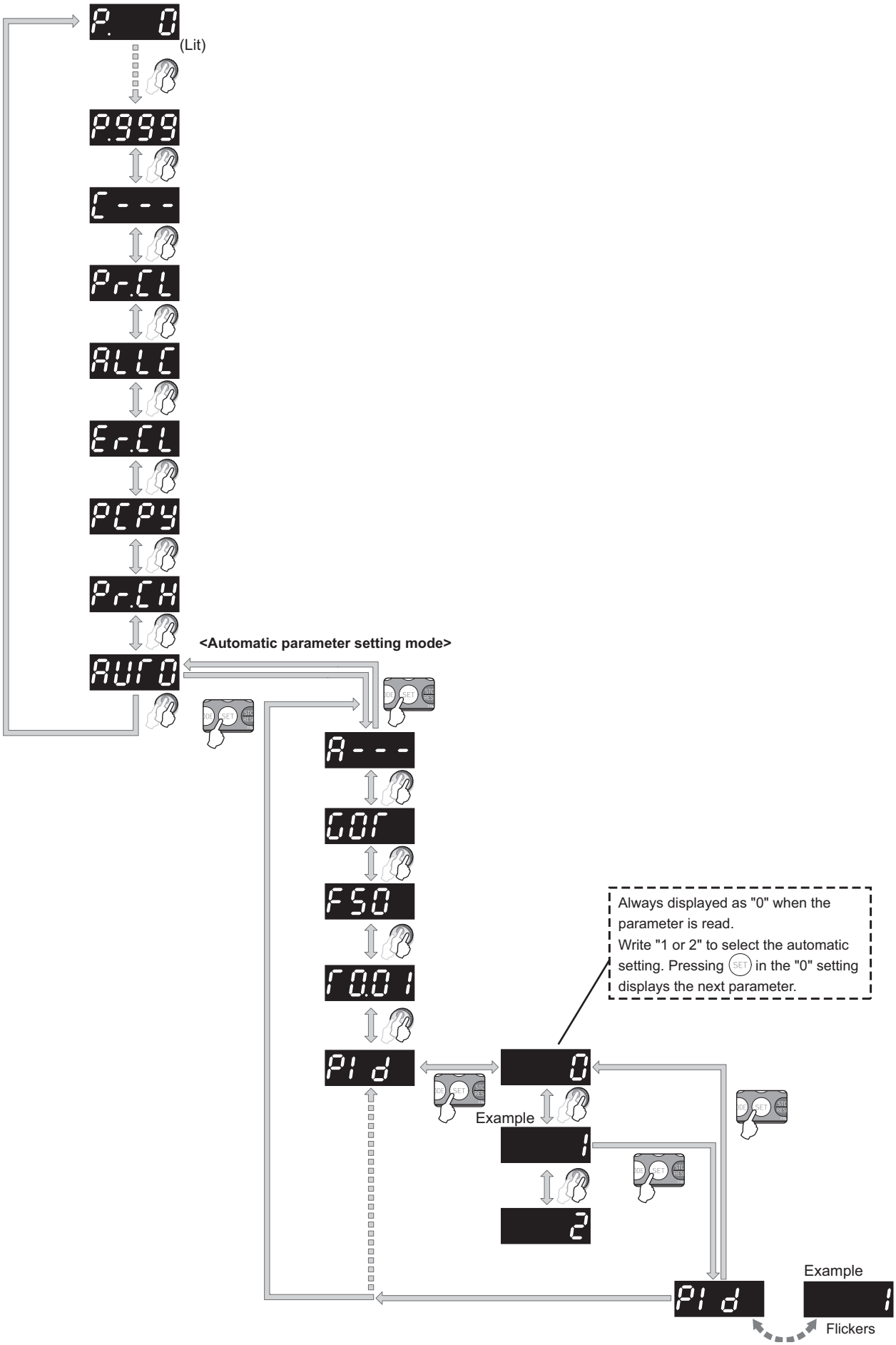

(4) List of automatically-set parameters

The following tables show which parameters are changed in each of the automatic parameter settings.

CAUTION

- If the automatic setting is performed with *Pr. 999* or the parameter setting mode, the listed settings including the changed parameter settings (changed from the initial setting) will be automatically changed. Before performing the automatic setting, confirm that changing the listed parameters will not cause any problem.

・Normal PID setting

When the PID display increments are not extended

Parameter	Name	Initial value	Automatically set to	Refer to page
759	PID unit selection	9999	9999	*320*
774	PU/DU monitor selection 1	9999	9999	*322*
775	PU/DU monitor selection 2	9999	9999	*322*
776	PU/DU monitor selection 3	9999	9999	*322*
934	PID display bias coefficient	9999	9999	*273*
935	PID display gain coefficient	9999	9999	*273*

* In this setting, the dedicated parameter list is not displayed while FR-PU07-01 is connected. (However, when another setting is made to activate the PID control, the list may be displayed according to the setting. (*Refer to page 319 for the details.*)

・Extended PID display increment setting

When the PID display increments are extended

Parameter	Name	Initial value	Automatically set to	Refer to page
759	PID unit selection	9999	4	*320*
774	PU/DU monitor selection 1	9999	52	*322*
775	PU/DU monitor selection 2	9999	53	*322*
776	PU/DU monitor selection 3	9999	54	*322*
934	PID display bias coefficient	9999	0	*273*
935	PID display gain coefficient	9999	100	*273*
—	3-line monitor start setting	9999	The 3-line monitor is displayed first.	*319*

* *Pr. 934* and *Pr. 935* settings affect displays of other parameters. Perform automatic setting of the extended PID display increments first. By doing this, the dedicated parameter list will be displayed when FR-PU07-01 is connected. In the initial status, the *Pr. 999* setting is applied for the display. After the setting, the *Pr. 934* and *Pr. 935* settings are applied.
The 3-line monitor is displayed first after the automatic setting while a parameter unit (FR-PU07(-01)) is connected.

・GOT initial setting (PU connector) (*Pr. 999* = "10")

Parameter	Name	Initial value	Automatically set to	Refer to page
79	Operation mode selection	0	1	*195*
118	PU communication speed	192	192	*214*
119	PU communication stop bit length	1	10	*214*
120	PU communication parity check	2	1	*214*
121	Number of PU communication retries	1	9999	*214*
122	PU communication check time interval	9999	9999	*214*
123	PU communication waiting time setting	9999	0ms	*214*
124	PU communication CR/LF selection	1	1	*214*
340	Communication startup mode selection	0	0	*203*

REMARKS

Always perform an inverter reset after the initial setting.

・GOT initial setting (RS-485 terminals) (*Pr. 999* = "11")

Parameter	Name	Initial value	Automatically set to	Refer to page
79	Operation mode selection	0	0	*195*
332	RS-485 communication speed	96	192	*214*
333	RS-485 communication stop bit length	1	10	*214*
334	RS-485 communication parity check selection	2	1	*214*
335	RS-485 communication retry count	1	9999	*214*
336	RS-485 communication check time interval	0s	9999	*214*
337	RS-485 communication waiting time setting	9999	0ms	*214*
340	Communication startup mode selection	0	1	*203*
341	RS-485 communication CR/LF selection	1	1	*214*
549	Protocol selection	0	0	*232*

REMARKS

Always perform an inverter reset after the initial setting.

・Rated frequency (*Pr. 999* = "20(50Hz), 21(60Hz)")

Parameter	Name	Initial value	*Pr.999* = "21"	*Pr.999* = "20" Automatic parameter setting	Refer to page
3	Base frequency	60Hz	60Hz	50Hz	*89*
4	Multi-speed setting (high speed)	60Hz	60Hz	50Hz	*93*
20	Acceleration/deceleration reference frequency	60Hz	60Hz	50Hz	*101*
55	Frequency monitoring reference	60Hz	60Hz	50Hz	*147*
66	Stall prevention operation reduction starting frequency	60Hz	60Hz	50Hz	*81*
125 (903)	Terminal 2 frequency setting gain frequency	60Hz	60Hz	50Hz	*177*
126 (905)	Terminal 4 frequency setting gain frequency	60Hz	60Hz	50Hz	*177*
263	Subtraction starting frequency	60Hz	60Hz	50Hz	*156*
266	Power failure deceleration time switchover frequency	60Hz	60Hz	50Hz	*156*
390*	% setting reference frequency	60Hz	60Hz	50Hz	FR-A7NL manual
505	Speed setting reference	60Hz	60Hz	50Hz	*139*
584	Auxiliary motor 1 starting frequency	60Hz	60Hz	50Hz	*283*
585	Auxiliary motor 2 starting frequency	60Hz	60Hz	50Hz	*283*
586	Auxiliary motor 3 starting frequency	60Hz	60Hz	50Hz	*283*

* This parameter can be set when the option FR-A7NL is mounted.

・Acceleration/deceleration time increment (*Pr. 999* ="30(0.1s) or 31(0.01s)")

Parameter	Name	Initial set increment	*Pr.999* = "30"	*Pr.999* = "31" Automatic parameter setting	Refer to page
7	Acceleration time	0.1s	0.1s	0.01s	*101*
8	Deceleration time	0.1s	0.1s	0.01s	*101*
16	Jog acceleration/deceleration time	0.1s	0.1s	0.01s	*95*
21	Acceleration/deceleration time increments	1	0 *	1 *	*101*
44	Second acceleration/ deceleration time	0.1s	0.1s	0.01s	*101*
45	Second deceleration time	0.1s	0.1s	0.01s	*101*
264	Power-failure deceleration time 1	0.1s	0.1s	0.01s	*156*
265	Power-failure deceleration time 2	0.1s	0.1s	0.01s	*156*
582	Auxiliary motor connection-time deceleration time	0.1s	0.1s	0.01s	*283*
583	Auxiliary motor disconnection-time acceleration time	0.1s	0.1s	0.01s	*283*

* The set value is changed for *Pr. 21*.

REMARKS

- When a parameter is set as the acceleration/deceleration time (0.1s), the 0.01s increment is dropped.
- When a parameter is set as the acceleration/deceleration time (0.01s), the parameters are limited at the maximum value of the parameter setting range. For example, *Pr. 7* = "361.0s" when 0.1s increment is selected, and *Pr. 7* = "360.00s" when 0.01s increment is selected.

4.23 Setting from the parameter unit, operation panel

Purpose	Parameter that must be Set		Refer to Page
Switch the display language of the parameter unit	**PU display language selection**	**Pr. 145**	315
Use the setting dial of the operation panel like a potentiometer for frequency setting. Key lock of operation panel	**Operation panel operation selection**	**Pr. 161**	315
Control of the parameter unit, operation panel buzzer	**PU buzzer control**	**Pr. 990**	317
Adjust the LCD contrast of the parameter unit	**PU contrast adjustment**	**Pr. 991**	317

4.23.1 PU display language selection (Pr. 145)

The display language of the parameter unit (FR-PU04/FR-PU07) can be changed to other languages.

Parameter Number	Name	Initial Value	Setting Range	Definition *
145	**PU display language selection**	1	0	Japanese
			1	English
			2	Germany
			3	French
			4	Spanish
			5	Italian
			6	Swedish
			7	Finnish

* Depending on the parameter unit, some parameter names or fault names etc. may not be displayed at all, or only displayed in English.

The above parameters can be set when *Pr. 160 User group read selection* = "0". *(Refer to page 190.)*

4.23.2 Setting dial potentiometer mode/key lock selection (Pr. 161)

The setting dial of the operation panel (FR-DU07) can be used like a potentiometer to perform operation.
The key operation of the operation panel can be disabled.

Parameter Number	Name	Initial Value	Setting Range	Description	
161	**Frequency setting/key lock operation selection**	0	0	Setting dial frequency setting mode	Key lock invalid
			1	Setting dial potentiometer mode	
			10	Setting dial frequency setting mode	Key lock valid
			11	Setting dial potentiometer mode	

The above parameters can be set when *Pr. 160 User group read selection* = "0". *(Refer to page 190.)*

(1) Using the setting dial like a potentiometer to set the frequency.

Operation example Changing the frequency from 0Hz to 60Hz during operation

Operation		Display
1. Screen at powering ON The monitor display appears.		0.00 Hz MON EXT
2. Press PU/EXT to choose the PU operation mode.	PU/EXT ⇨	PU indication is lit. 0.00 PU EXT NET
3. Press MODE to choose the parameter setting mode.	MODE ⇨	P. 0 (The parameter number previously read appears.)
4. Turn ◎ until P. 161 (*Pr. 161*) appears.	⇨	P. 161
5. Press SET to read the present set value. " 0 " (initial value) appears.	SET ⇨	0
6. Turn ◎ to change it to the setting value " 1 ".	⇨	1
7. Press SET to set.	SET ⇨	1 ↔ P. 161 **Flicker ··· Parameter setting complete!!**
8. Mode/monitor check Press MODE twice to choose monitor/frequency monitor.	MODE ⇨	0.00 Hz MON PU
9. Press FWD (or REV) to start the inverter.	FWD ⇨	0.00 Hz MON PU
10. Turn ◎ until " 60.00 " appears. The flickering frequency is the set frequency. You need not press SET.	⇨	0 → 60.00 The frequency flickers for about 5s.

REMARKS

- If the display changes from flickering "60.00" to "0.00", the setting of *Pr. 161 Frequency setting/key lock operation selection* may not be "1".
- Independently of whether the inverter is running or at a stop, the frequency can be set by merely turning the dial.
- When the frequency is changed, it will be stored in EEPROM as the set frequency after 10s.

CAUTION

- When using setting dial, the frequency goes up to the set value of *Pr.1 Maximum frequency* (initial value :120Hz (FR-F720-02330 (FR-F740-01160) or less) /60Hz (FR-F720-03160 (FR-F740-01800) or more).

(2) Disable the setting dial and key operation of the operation panel (Press [MODE] long (2s))

- Operation using the setting dial and key of the operation panel can be made invalid to prevent parameter change, and unexpected start or frequency setting.
- Set "10 or 11" in *Pr. 161*, then press (MODE) for 2s to make the setting dial and key operation invalid.
- When the setting dial and key operation are invalid, HOLd appears on the operation panel. If dial or key operation is attempted while dial and key operation are invalid, HOLd appears (When dial or key is not touched for 2s, monitor display appears.)
- To make the setting dial and key operation valid again, press (MODE) for 2s.

REMARKS

- Even if the setting dial and key operation are disabled, the monitor display (STOP RESET) is valid.

4.23.3 Buzzer control (Pr. 990)

You can make the buzzer "beep" when you press key of the operation panel (FR-DU07) and parameter unit (FR-PU04/FR-PU07).

Parameter Number	Name	Initial Value	Setting Range	Description
990	PU buzzer control	1	0	Without buzzer
			1	With buzzer

The above parameters can be set when *Pr. 160 User group read selection* = "0". *(Refer to page 190.)*
The above parameters allow its setting to be changed during operation in any operation mode even if "0" (initial value) is set in *Pr. 77 Parameter write selection*.

4.23.4 PU contrast adjustment (Pr. 991)

Contrast adjustment of the LCD of the parameter unit (FR-PU04/FR-PU07) can be performed.
Decreasing the setting value makes contrast light.

Parameter Number	Name	Initial Value	Setting Range	Description
991	PU contrast adjustment	58	0 to 63	0 : Light ↓ 63: Dark

The above parameters are displayed as simple mode parameters only when the parameter unit (FR-PU04/FR-PU07) is connected.
The above parameters allow its setting to be changed during operation in any operation mode even if "0" (initial value) is set in *Pr. 77 Parameter write selection*.
When the operation panel is connected, they can be set only when *Pr. 160 User group read selection* = "0". *(Refer to page 190.)*

4.24 Setting of FR-PU07-01

Purpose	Parameter that must be Set		Refer to Page
To set bias and gain for the PID display in simple steps	**PID display bias/gain setting menu**	**-**	319
To change unit of parameters and monitored items that are related to PID control	**Unit selection for the PID parameter/PID monitored items**	**Pr. 759**	320
To input the PID set point from FR-PU07-01 in simple steps	**PID set point direct setting menu**	**-**	321
To change the displayed items on the 3-line monitor	**Monitor name display on 3-line monitor**	**Pr. 774, Pr. 775, Pr. 776**	322

The following functions are available when using FR-PU07-01 with FR-F700-NA series produced after June 2010. (For product assembled date, check the SERIAL number indicated on the inverter rating plate or package. *Refer to page 400*)

- PID display bias/gain setting menu
- Unit selection for the PID parameter/PID monitored items
- PID set point direct setting menu
- Monitor name display on 3-line monitor

Operation key name and operation mode indication on LCD are partly different with FR-PU07 and FR-PU07BB.

Operation key		Operation mode indication on LCD	
FR-PU07-01	**FR-PU07**	**FR-PU07-01**	**FR-PU07**
AUTO key, HAND key 	EXT key, PU key 	Indication of AUTO, HAND 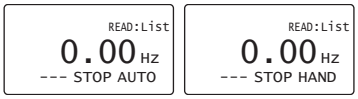	Indication of EXT, PU 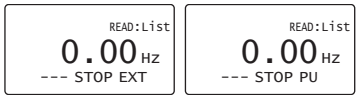

4.24.1 PID display bias/gain setting menu

The parameters, which need to be set first when FR-PU07-01 is connected, are displayed as a list. The bias and gain for the PID display (*Pr. 934* and *Pr. 935*) and setting for *Pr. 999 Automatic parameter setting* can be set in these simple steps.

Pressing PrSET while the FR-PU07-01 is in the monitor mode brings up the dedicated menu screen.
Pr. 999 is displayed at the first turn ON of the inverter, or at the first turn ON after parameter clear. After *Pr. 999* is set, *Pr. 934* and *Pr. 935* are displayed on the dedicated parameter menu.

(This function is valid under PID control. If PrSET is pressed while PID control is invalid, the monitor goes into the parameter setting mode.)

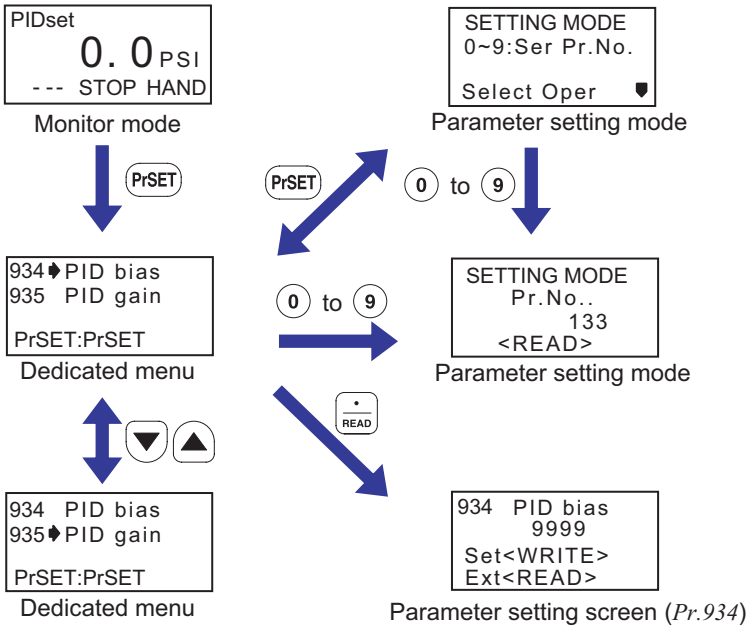

Example when setting value "2" is set once in Pr. 999

Display of the dedicated parameter menu differs depending on *Pr. 999* setting and PID control condition.

Condition / Pr.999 setting	Dedicated parameter menu	
	When PID control is unavailable (Pr. 128 < 50, and Pr. 753 < 50, and X14 signal not assigned)	**When PID control is available (Pr. 128 ≥ 50, or Pr. 753 ≥ 50, or X14 signal assigned)**
Never set before	*Pr. 999*	*Pr. 999, Pr. 934, Pr. 935*
1 (normal PID)	No display	*Pr. 934, Pr. 935*
2 (extended PID)	*Pr. 934, Pr. 935*	*Pr. 934, Pr. 935*

REMARKS

The parameters, which are displayed in the dedicated parameter menu, can be always read regardless of the *Pr. 160* setting. For writing, the same restriction as for the normal parameters is applied.

4.24.2 Unit selection for the PID parameter/PID monitored items (Pr. 759)

For the parameter unit (FR-PU07/FR-PU07-01), the display unit of parameters and monitored items, which are related to PID control, can be changed. When the displayed bias coefficient and gain coefficient for PID control are changed by *Pr. 934* and *Pr. 935*, the unit setting of *Pr. 759* is applied to the direct setting mode display, parameters and monitored items.

* The direct setting mode is available only for FR-PU07-01.

Parameter Number	Name	Initial Value	Setting Range	Description
759	**PID unit selection**	9999	0 to 43, 9999	Change the display unit of the parameters and monitored items, which are related to PID control.

<List of *Pr. 759* settings and units>

Setting	Unit display	Unit name
9999	%	%
0		Not displayed
1	K	Kelvin
2	C	Degree Celsius
3	F	Degree Fahrenheit
4	PSI	Pound-force per Square Inch
5	MPa	Mega Pascal
6	kPa	Kilo Pascal
7	Pa	Pascal
8	bar	Bar
9	mbr	Milli Bar
10	GPH	Gallon per Hour
11	GPM	Gallon per Minute
12	GPS	Gallon per Second
13	L/H	Liter per Hour
14	L/M	Liter per Minute
15	L/S	Liter per Second

Setting	Unit display	Unit name
16	CFH	Cubic Feet per Hour
17	CFM	Cubic Feet per Minute
18	CFS	Cubic Feet per Second
19	CMH	Cubic Meter per Hour
20	CMM	Cubic Meter per Minute
22	ftM	Feet per Minute
23	ftS	Feet per Second
24	m/M	Meter per Minute
25	m/S	Meter per Second
26	lbH	Pound per Hour
27	lbM	Pound per Minute
28	lbS	Pound per Second
29	iWC	Inch of Water Column
30	iWG	Inch of Water Gauge

Setting	Unit display	Unit name
31	fWG	Feet of Water Gauge
32	mWG	Meter of Water Gauge
33	iHg	Inch of Mercury
34	mHg	Millimeter of Mercury
35	kgH	Kilo Gram per Hour
36	kgM	Kilo Gram per Minute
37	kgS	Kilo Gram per Second
38	ppm	Pulse per Minute
39	pps	Pulse per Second
40	kW	Kilo Watt
41	hp	Horse Power
42	Hz	Hertz
43	rpm	Revolution per Minute

[Parameters of which display units are changed]

Pr.	Parameter name
131	PID upper limit
132	PID lower limit
133	PID action set point
553	PID deviation limit
577	Output interruption cancel level
755	Second PID action set point
761	Pre-charge ending level
763	Pre-charge upper detection level
766	Second pre-charge ending level
768	Second pre-charge upper detection level

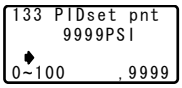

How *Pr. 133* is displayed when *Pr. 759* = "4"

[Monitored items of which display units are changed]

Pr.52 setting	Monitor item
52	DU/PU main display data selection
53	PID measured value
54	FM terminal function selection

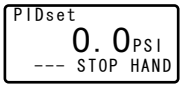

How PID set value is displayed when *Pr. 759* = "4"

REMARKS

The *Pr. 759* setting is also applied for the display unit of parameters and monitored items when using FR-PU07.

4.24.3 PID set point direct setting menu

The setting menu is used to input the PID set point *(Pr. 133, Pr. 755)* in simple steps under PID control.
Pressing FUNC while the FR-PU07-01 is in the monitor mode starts the direct setting mode for the PID set point.
(Valid under PID control. If FUNC is pressed while the PID control is invalid, the function menu is displayed.)

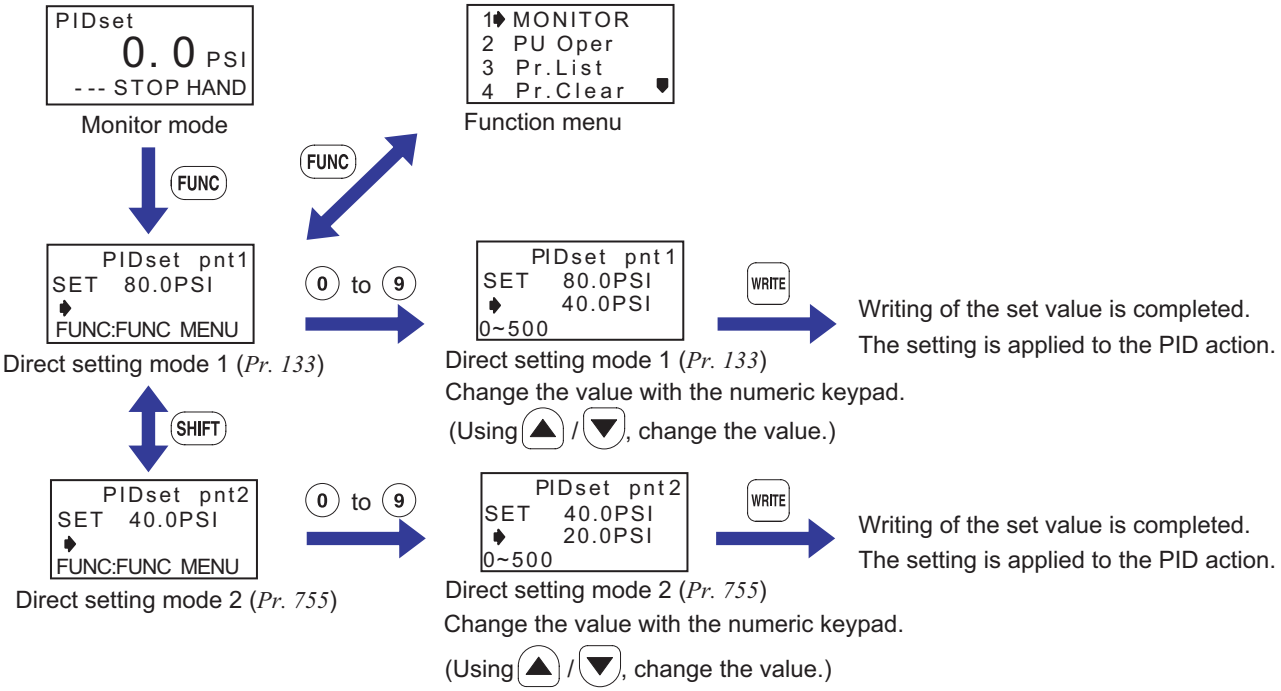

REMARKS

In the direct setting mode, parameters can be always read or written regardless of the *Pr. 77* and *Pr. 160* settings.

4.24.4 3-line monitor selection (Pr. 774 to Pr.776)

For the parameter unit (FR-PU07)/operation panel (FR-DU07), the first, second, and third monitors can be changed. When using FR-PU07-01, the monitored items, which are set by *Pr.774 to Pr.776*, can be displayed in the 3-line monitor.
The *Pr.52 DU/PU main display data selection* setting is invalid when *Pr.774 to Pr.776* ≠ 9999. Monitored item names are displayed during monitoring (Monitor name display in the 3-line monitor is available only for FR-PU07-01).

Parameter Number	Name	Initial Value	Setting Range	Description
774	**PU/DU monitor selection 1**	9999	1 to 3, 5, 6, 8 to 14, 17, 20, 23 to 25, 40 to 42, 50 to 57, 67, 81 to 86, 100, 9999	Select the monitored item to be displayed on the first monitor (first row in the 3-line monitor).
775	**PU/DU monitor selection 2**			Select the monitored item to be displayed on the second monitor (second row in the 3-line monitor).
776	**PU/DU monitor selection 3**			Select the monitored item to be displayed on the third monitor (third row in the 3-line monitor).

Setting	Monitor item
1	Output frequency
2	Output current
3	Output voltage
5	Frequency setting value
6	Running speed
8	Converter output voltage
9	Regenerative brake duty
10	Electronic thermal relay function load factor
11	Output current peak value
12	Converter output voltage peak value
13	Input power
14	Output power
17	Load meter
20	Cumulative energization time
23	Actual operation time
24	Motor load factor

Setting	Monitor item
25	Cumulative power
40	PLC function user monitor 1 *3
41	PLC function user monitor 2 *3
42	PLC function user monitor 3 *3
50	Power saving effect
51	Cumulative saving power
52	PID set point
53	PID measured value
54	PID deviation
55 *1	I/O terminal status
56 *1	Option input terminal status
57 *1	Option output terminal status
67	PID measured value 2
81	BACnet reception status
82	BACnet token pass counter
83	BACnet valid APDU counter

Setting	Monitor item
84	BACnet communication error counter
85	Terminal CA output level
86	Terminal AM output level
100	Set frequency before operation
9999 *2	No selection

```
PIDset 100.0PSI
PIDval  80.0PSI
PIDdev   5.0PSI
  STF FWD HAND
```

How the monitor is displayed when *Pr. 759* = "4," *Pr. 774* = "52," *Pr. 775* = "53," and *Pr. 776* = "54"

*1 The monitor is displayed as *Pr. 774* = "1," *Pr. 775* = "2," and *Pr. 776* = "3" when a parameter unit other than FR-DU07 is used.
*2 The monitor is displayed as *Pr. 774* = "1," *Pr. 775* = "2," and *Pr. 776* = "3" when the monitor selection is valid.
*3 The setting is available when using PLC function. Refer to the FR-F700 PLC function programming manual for details of the PLC function.

♦ Parameters referred to ♦

Pr. 52 DU/PU main display data selection ☞ *Refer to page 141*
Pr. 59 Remote function selection ☞ *Refer to page 98*
Pr. 73 Analog input selection ☞ *Refer to page 171*
Pr. 79 Operation mode selection ☞ *Refer to page 195*
Pr. 133 PID action set point ☞ *Refer to page 261*
Pr. 160 User group read selection ☞ *Refer to page 190*
Pr. 178 to Pr. 189 (input terminal function selection) ☞ *Refer to page 122*
Pr. 190 to Pr. 196 (output terminal function selection) ☞ *Refer to page 128*
C2 (Pr. 902) to C7 (Pr. 905) Frequency setting voltage (current) bias/gain ☞ *Refer to page 177*
C42 (Pr. 934) to C45 (Pr. 935) (PID control) ☞ *Refer to page 261*

4.25 Parameter clear

POINT

- Set "1" in *Pr. CL parameter clear* to initialize parameters. (Parameters are not cleared when "1" is set in *Pr. 77 Parameter write selection*. In addition, calibration parameters are not cleared.)

Operation	Display
1. Screen at powering ON The monitor display appears.	0.00
2. Press PU/EXT to choose the PU operation mode.	PU indication is lit. 0.00 PU
3. Press MODE to choose the parameter setting mode.	P. 0 (The parameter number read previously appears.)
4. Turn ◎ until "Pr.CL" (parameter clear) appears.	Pr.CL
5. Press SET to read the present set value. "0"(initial value) appears.	0
6. Turn ◎ to change it to the setting value " 1".	1
7. Press SET to set.	1 Pr.CL

Flicker ··· Parameter setting complete!!

- Turn ◎ to read another parameter.
- Press SET to show the setting again.
- Press SET twice to show the next parameter.

Setting	Description
0	Not executed.
1	Returns all parameters to the initial values except for *calibration parameters, terminal function selection parameters, etc*. Refer to the list of parameters on *page 390* for availability of parameter clear.

? 1 and Er4 are displayed alternately ... Why?

☞ The inverter is not in the PU operation mode.

1. Press PU/EXT.

   PU is lit and the monitor (4 digit LED) displays "0" (*Pr. 79* = "0" (initial value)).
2. Carry out operation from step 6 again.

4.26 All parameter clear

POINT

- Set "1" in *ALLC all parameter clear* to initialize all parameters. (Parameters are not cleared when "1" is set in *Pr. 77 Parameter write selection*.)

Operation	Display
1. Screen at powering ON The monitor display appears.	0.00 Hz MON EXT
2. Press PU/EXT to choose the PU operation mode.	PU indication is lit. 0.00 PU EXT NET
3. Press MODE to choose the parameter setting mode.	P. 0 (The parameter number read previously appears.)
4. Turn ◎ until ALLC (all parameter clear) appears.	ALLC
5. Press SET to read the present set value. "0"(initial value) appears.	0
6. Turn ◎ to change it to the setting value "1".	1
7. Press SET to set.	1 ALLC **Flicker ··· Parameter setting complete!!**

- Press ◎ to read another parameter.
- Press SET to show the setting again.
- Press SET twice to show the next parameter.

Setting	Description
0	Not executed.
1	All parameters return to the initial values. Refer to the list of parameters on *page 390* for availability of parameter clear.

? 1 and Er4 are displayed alternately ... Why?

☞ The inverter is not in the PU operation mode.

1. Press PU/EXT.

   PU is lit and the monitor (4 digit LED) displays "0" (*Pr. 79* = "0" (initial value)).
2. Carry out operation from step 6 again.

4.27 Parameter copy and parameter verification

PCPY Setting	Description
0	Cancel
1	Copy the source parameters to the operation panel.
2	Write the parameters copied to the operation panel into the destination inverter.
3	Verify parameters in the inverter and operation panel. *(Refer to page 326.)*

REMARKS

- When the copy destination inverter is not the FR-F700 series or parameter copy write is performed after parameter copy read is stopped, "model error (rE4)" is displayed.
- Refer to the parameter list on *page 390* and later for availability of parameter copy.
- When the power is turned OFF or an operation panel is disconnected, etc. during parameter copy write, perform write again or check the values by parameter verification.

4.27.1 Parameter copy

Parameter settings can be copied to multiple inverters.

Operation | **Display**

1. Connect the operation panel to the copy source inverter.
   - **Connect it during a stop.**

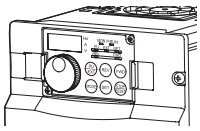

2. Press MODE to choose the parameter setting mode.

3. Turn ◎ until PCPY (parameter copy) appears.

4. Press SET to read the present set value. "0"(initial value) appears.

5. Turn ◎ to change it to the setting value "1".

6. Press SET to copy the source parameters to the operation panel.

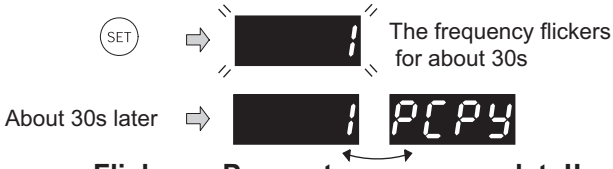

7. Connect the operation panel to the copy source inverter.

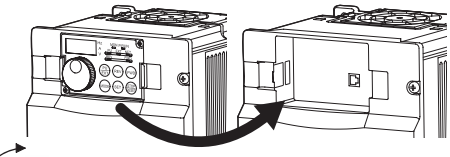

8. After performing steps 2 to 5, turn ◎ to change it to "2".

9. Press SET to write the parameters copied to the operation panel to the destination inverter.

10. When copy is completed, "2" and "PCPY" flicker.

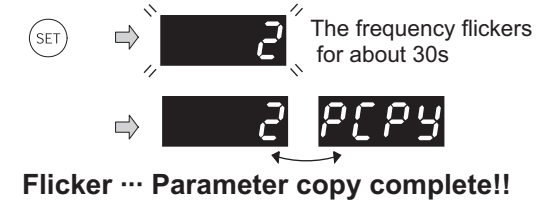

11. After writing the parameter values to the copy destination inverter, always reset the inverter, e.g. switch power OFF once, before starting operation.

? rE1 appears...Why? ☞ Parameter read error. Perform operation from step 3 again.

? rE2 appears...Why? ☞ Parameter write error. Perform operation from step 8 again.

? CP and 0.00 flicker alternately

☞ Appears when parameters are copied between the inverter of FR-F720-02330 (FR-F740-01160) or less and FR-F720-03160 (FR-F740-01800) or more.

1. Set "0" in *Pr. 160 User group read selection*.
2. Set the following setting (initial value) in *Pr. 989 Parameter copy alarm release*.

	FR-F720-02330 (FR-F740-01160) or less	FR-F720-03160 (FR-F740-01800) or more
Pr. 989 Setting	10	100

3. Reset *Pr. 9, Pr. 30, Pr. 51, Pr. 52, Pr. 54, Pr. 56, Pr. 57, Pr. 70, Pr. 72, Pr. 80, Pr. 90, Pr. 158, Pr. 190 to Pr. 196, Pr. 557, Pr. 893*.

4.27.2 Parameter verification

Whether same parameter values are set in other inverters or not can be checked.

Operation — Display

1. Move the operation panel to the inverter to be verified.
   - **Move it during a stop.**

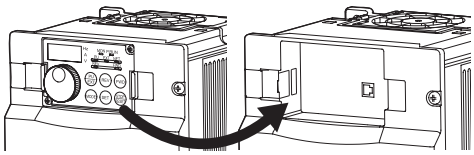

2. Screen at powering ON
   The monitor display appears.

3. Press MODE to choose the parameter setting mode.

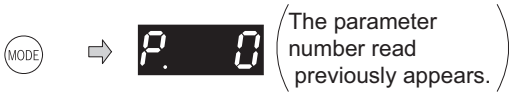

4. Turn ◎ until PCPY (parameter copy) appears.

5. Press SET to read the present set value.
   "0"(initial value) appears.

6. Turn ◎ to change it to the set value "3"(parameter copy verification mode).

7. Press SET to read the parameter setting of the verified inverter to the operation panel.

- If different parameters exist, different parameter numbers and rE3 flicker.

- Hold down SET to verify.

8. If there is no difference, PCPY and 3 flicker to complete verification.

Flicker ··· Parameter verification complete!!

REMARKS

When the copy destination inverter is not the FR-F700 series, "model error (rE4)" is displayed.

? rE3 flickers ... Why?

☞ Set frequencies, etc. may be different. Check set frequencies.

4.28 Initial value change list Ver.UP

Displays and sets the parameters changed from the initial value.

Ver.UP .....The specification differ according to the manufacture date. Refer to *page* 400 and check the SERIAL.

Operation / Display

1. Screen at powering ON
   The monitor display appears.

PU indication is lit.

2. Press PU/EXT to choose the PU operation mode.

PRM indication is lit.

3. Press MODE to choose the parameter setting mode.

(The parameter number read previously appears.)

4. Turn ◎ until Pr.CH appears.

5. Pressing SET changes to the initial value change list screen.

6. Turning ◎ displays the parameter number changed.

●Press SET to read the currently set value.

Turn ◎ and press SET to change the setting
(refer to step 6 and 7 on page 61*)*

Flicker ··· Frequency setting complete!!

●Turn ◎ to read another parameter.

●The display returns to P.--- after all parameters are displayed.

7. Pressing SET in P.--- status returns to the parameter setting mode.

- Turning ◎ sets other parameters.
- Pressing SET displays the change list again.

REMARKS

- Calibration parameters *(C0 (Pr. 900) to C7 (Pr. 905), C42 (Pr. 934) to C45 (Pr. 935))* are not displayed even they are changed from the initial settings.
- Only simple mode parameter is displayed when simple mode is set (*Pr. 160* = 9999 (initial value))
- Only user group is displayed when user group is set (*Pr. 160* = "1").
- *Pr. 160* is displayed independently of whether the setting value is changed or not.

♦ Parameters referred to ♦

Pr. 160 User group read selection ☞ *Refer to page 190*
C0 (Pr. 900) CA terminal calibration ☞ *Refer to page 149*
C2 (Pr. 902) to C7 (Pr. 905) (Frequency setting bias/gain parameter) ☞ *Refer to page 177*
C42 (Pr. 934) to C45 (Pr. 935) (PID control) ☞ *Refer to page 261*

4.29 Check and clear of the faults history

(1) Check for the faults history

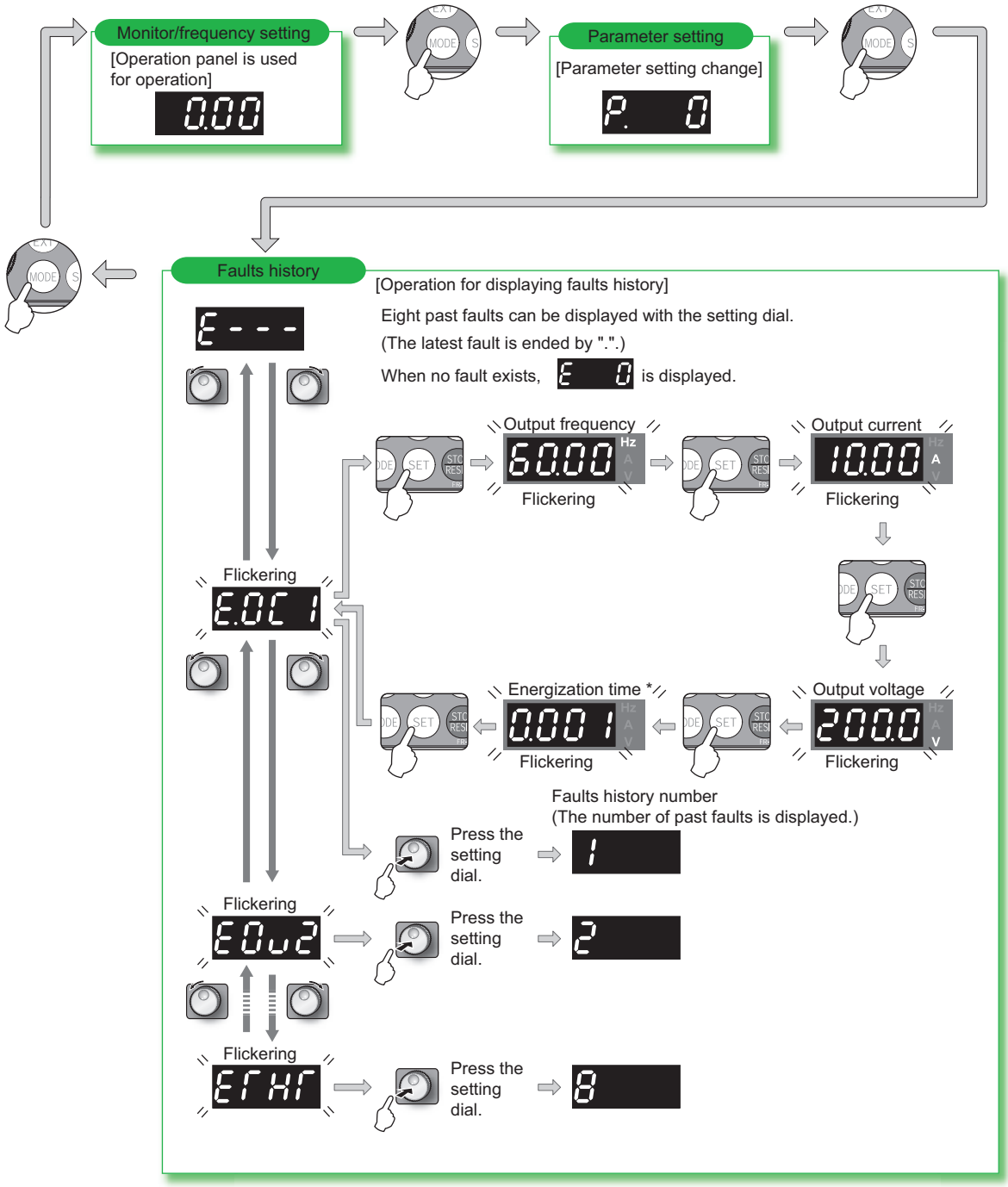

* The cumulative energization time and actual operation time are accumulated from 0 to 65535 hours, then cleared, and accumulated again from 0. When the operation panel (FR-DU07) is used, the time is displayed up to 65.53 (65530h) in the indication of 1h = 0.001, and thereafter, it is added up from 0.

(2) Clearing procedure

POINT

· The faults history can be cleared by setting "1" in *Er.CL Faults history clear*.

Operation	Display
1. Screen at powering ON The monitor display appears.	0.00 Hz MON EXT
2. Press MODE to choose the parameter setting mode.	MODE ⇨ P. 0 (The parameter number previously read appears.)
3. Turn ◎ until Er.CL (faults history clear) appears.	⇨ Er.CL
4. Press SET to read the present set value. "0"(initial value) appears.	SET ⇨ 0
5. Turn ◎ to change it to the setting value "1".	⇨ 1
6. Press SET to set.	SET ⇨ 1 ↔ Er.CL

Flicker ··· Faults history clear complete!!

· Press ◎ to read another parameter.

· Press SET to show the setting again.

· Press SET twice to show the next parameter.

MEMO

5 PROTECTIVE FUNCTIONS

This chapter describes the basic "PROTECTIVE FUNCTION" for use of this product.
Always read the instructions before using the equipment.

5.1 Reset method of protective function 332
5.2 List of fault or alarm display 333
5.3 Causes and corrective actions 334
5.4 Correspondences between digital and actual characters 346
5.5 Check first when you have a trouble 347

When a fault occurs in the inverter, the inverter trips and the PU display automatically changes to one of the following fault or alarm indications.
If the fault does not correspond to any of the following faults or if you have any other problem, please contact your sales representative or distributor.

- Retention of fault output signal ..... When the magnetic contactor (MC) provided on the input side of the inverter is opened when a fault occurs, the inverter's control power will be lost and the fault output will not be held.
- Fault or alarm indication ..... When a fault or alarm occurs, the operation panel display automatically switches to the fault or alarm indication
- Resetting method..... When a fault occurs, the inverter output is kept stopped. Unless reset, therefore, the inverter cannot restart. *(Refer to page 332.)*
- When any fault occurs, take the appropriate corrective action, then reset the inverter, and resume operation. Not doing so may lead to the inverter fault and damage.

Inverter fault or alarm indications are roughly categorized as below.

(1) Error message
A message regarding operational fault and setting fault by the operation panel (FR-DU07) and parameter unit (FR-PU04 /FR-PU07) is displayed. The inverter does not trip.

(2) Warnings
The inverter does not trip even when a warning is displayed. However, failure to take appropriate measures will lead to a fault.

(3) Alarm
The inverter does not trip. You can also output an alarm signal by making parameter setting.

(4) Fault
When a fault occurs, the inverter trips and a fault signal is output.

REMARKS

- For the details of fault displays and other troubles, also *refer to page 333.*
- Past eight faults can be displayed using the setting dial. (*Refer to page 59* for the operation.)

5.1 Reset method of protective function

The inverter can be reset by performing any of the following operations. Note that the internal thermal integrated value of the electronic thermal relay function and the number of retries are cleared (erased) by resetting the inverter.
Inverter recovers about 1s after the reset is released.

Operation 1: ..... Using the operation panel, press STOP RESET to reset the inverter.
(This may only be performed when a fault occurs. (*Refer to page 338* for fault.))

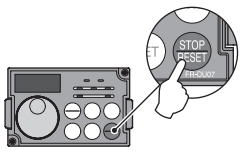

Operation 2: ..... Switch OFF the power once. After the indicator of the operation panel turns OFF, switch it ON again.

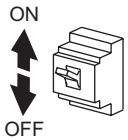

Operation 3: ..... Turn ON the reset signal (RES) for more than 0.1s. (If the RES signal is kept ON, "Err." appears (flickers) to indicate that the inverter is in a reset status.)

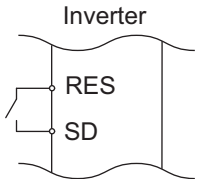

REMARKS

- When a fault occurs during PLC function, turning ON of X51 signal can release fault without interrupting PLC function. *(Refer to the FR-F700 PLC function programming manual.)*

CAUTION

- OFF status of the start signal must be confirmed before resetting the inverter fault. Resetting inverter fault with the start signal ON restarts the motor suddenly.

5.2 List of fault or alarm display

	Operation Panel Indication		Name	fault Data code	Refer to
Error message	E---	E---	Faults history	-	328
	HOLd	HOLD	Operation panel lock	-	334
	LOCd	LOCd Ver.UP	Password locked	-	334
	Er1 to Er4	Er1 to 4	Parameter write error	-	334
	rE1 to rE4	rE1 to 4	Copy operation error	-	335
	Err.	Err.	Error	-	335
Warnings	OL	OL	Stall prevention (overcurrent)	-	336
	oL	oL	Stall prevention (overvoltage)	-	336
	rb	RB	Regenerative brake prealarm	-	337
	TH	TH	Electronic thermal relay function prealarm	-	337
	PS	PS	PU stop	-	336
	MT	MT	Maintenance signal output	-	337
	CP	CP	Parameter copy	-	337
Alarm	FN	FN	Fan alarm	-	337
Fault	E.OC1	E.OC1	Overcurrent trip during acceleration	16 (H10)	338
	E.OC2	E.OC2	Overcurrent trip during constant speed	17 (H11)	338
	E.OC3	E.OC3	Overcurrent trip during deceleration or stop	18 (H12)	338
	E.OV1	E.OV1	Regenerative overvoltage trip during acceleration	32 (H20)	339
	E.OV2	E.OV2	Regenerative overvoltage trip during constant speed	33 (H21)	339
	E.OV3	E.OV3	Regenerative overvoltage trip during deceleration or stop	34 (H22)	339
	E.THT	E.THT	Inverter overload trip (electronic thermal relay function)	48 (H30)	339
	E.THM	E.THM	Motor overload trip (electronic thermal relay function)	49 (H31)	340
	E.FIN	E.FIN	Heatsink overheat	64 (H40)	340
	E.IPF	E.IPF	Instantaneous power failure	80 (H50)	340
	E.UVT	E.UVT	Undervoltage	81 (H51)	341
	E.ILF	E.ILF*	Input phase loss	82 (H52)	341
	E.OLT	E.OLT	Stall prevention stop	96 (H60)	341
Fault	E.GF	E.GF	Output side earth (ground) fault overcurrent	128 (H80)	341

	Operation Panel Indication		Name	fault Data code	Refer to
Fault	E.LF	E.LF	Output phase loss	129 (H81)	341
	E.OHT	E.OHT	External thermal relay operation *2	144 (H90)	342
	E.PTC	E.PTC*	PTC thermistor operation	145 (H91)	342
	E.OPT	E.OPT	Option fault	160 (HA0)	342
	E.OP1 E.OP2	E.OP1 E.OP2 Ver.UP	Communication option fault	161 (HA1) 162 (HA2)	342
	E. 1 E. 2	E. 1 E. 2 Ver.UP	Option fault	241 (HF1) 242 (HF2)	343
	E. PE	E.PE	Parameter storage device fault	176 (HB0)	343
	E.PUE	E.PUE	PU disconnection	177 (HB1)	343
	E.rET	E.RET	Retry count excess	178 (HB2)	343
	E.PE2	E.PE2*	Parameter storage device fault	179 (HB3)	343
	E. 5 E. 6 E. 7 E.CPU	E. 5 E. 6 E. 7 E.CPU	CPU fault	245 (HF5) 246 (HF6) 247 (HF7) 192 (HC0)	344
	E.CTE	E.CTE	Operation panel power supply short circuit, RS-485 terminal power supply short circuit	193 (HC1)	344
	E.P24	E.P24	24VDC power output short circuit	194 (HC2)	344
	E.CDO	E.CDO*	Output current detection value exceeded	196 (HC4)	344
	E.IOH	E.IOH*	Inrush current limit circuit fault	197 (HC5)	344
	E.SER	E.SER*	Communication fault (inverter)	198 (HC6)	345
	E.AIE	E.AIE*	Analog input fault	199 (HC7)	345
	E.PID	E.PID*	PID signal fault	230 (HE6)	345
	E. bE	E.BE	Brake transistor alarm detection/internal circuit fault	112 (H70)	340
	E. 13	E.13	Internal circuit fault	253 (HFD)	345
	E.PCH	E. PCH* Ver.UP	Pre-charge fault	229 (HE5)	345
	E.LCI	E.LCI* Ver.UP	4mA input fault	228 (HE4)	346

* If an error occurs when using the FR-PU04, "Fault 14" is displayed on the FR-PU04.

Ver.UP … Specifications differ according to the date assembled. *Refer to page 400* to check the SERIAL number.

5.3 Causes and corrective actions

(1) Error Message

A message regarding operational troubles is displayed. Output is not shut off.

Operation Panel Indication	HOLD	HOLd
Name	Operation panel lock	
Description	Operation lock mode is set. Operation other than STOP RESET is invalid. *(Refer to page 317.)*	
Check point	—	
Corrective action	Press MODE for 2s to release lock.	

Operation panel indication	LOCd Ver.UP	LOCd
Name	Password locked	
Description	Password function is active. Display and setting of parameter is restricted.	
Check point	—	
Corrective action	Enter the password in *Pr. 297 Password lock/unlock* to unlock the password function before operating. *(Refer to page 192).*	

Ver.UP … Specifications differ according to the date assembled. *Refer to page 400* to check the SERIAL number.

Operation Panel Indication	Er1	Er 1
Name	Write disable error	
Description	· You attempted to make parameter setting when *Pr. 77 Parameter write selection* has been set to disable parameter write. · Frequency jump setting range overlapped. · Adjustable 5 points V/F settings overlapped · PU and inverter cannot make normal communication	
Check point	· Check the setting of *Pr. 77 Parameter write selection (Refer to page 189.)* · Check the settings of *Pr. 31 to 36 (frequency jump). (Refer to page 88.)* · Check the settings of *Pr. 100 to Pr. 109 (Adjustable 5 points V/F). (Refer to page 92.)* · Check the connection of PU and inverter.	

Operation Panel Indication	Er2	Er2
Name	Write error during operation	
Description	When parameter write was performed during operation with a value other than "2" (writing is enabled independently of operating status in any operation mode) is set in *Pr. 77* and the STF (STR) is ON.	
Check point	· Check the *Pr. 77* setting. *(Refer to page 189.)* · Check that the inverter is not operating.	
Corrective action	· Set "2" in *Pr. 77*. · After stopping operation, make parameter setting.	

Operation Panel Indication	Er3	Er3
Name	Calibration error	
Description	Analog input bias and gain calibration values are too close.	
Check point	Check the settings of C3, C4, C6 and C7 (calibration functions). *(Refer to page 177.)*	

Operation Panel Indication	Er4	Er4
Name	Mode designation error	
Description	· You attempted to make parameter setting in the NET operation mode when *Pr. 77* is not "2". · If a parameter write was performed when the command source is not at the operation panel (FR-DU07).	
Check point	· Check that operation mode is "PU operation mode". · Check the *Pr. 77* setting. *(Refer to page 189.)* · Check the *Pr. 551* setting.	
Corrective action	· After setting the operation mode to the "PU operation mode", make parameter setting. *(Refer to page 189.)* · After setting "2" in *Pr. 77*, make parameter setting. · Set *Pr.551* = "2 (initial setting)". *(Refer to page 204.)*	

Operation Panel Indication	rE1	rE1
Name	Parameter read error	
Description	An error occurred in the EEPROM on the operation panel side during parameter copy reading.	
Check point	—	
Corrective action	· Make parameter copy again. *(Refer to page 325.)* · Check for an operation panel (FR-DU07) failure. Please contact your sales representative.	

Operation Panel Indication	rE2	rE2
Name	Parameter write error	
Description	· You attempted to perform parameter copy write during operation. · An error occurred in the EEPROM on the operation panel side during parameter copy writing.	
Check point	Is the FWD or REV LED of the operation panel (FR-DU07) lit or flickering?	
Corrective action	· After stopping operation, make parameter copy again. *(Refer to page 325.)* · Check for an operation panel (FR-DU07) failure. Please contact your sales representative.	

Operation Panel Indication	rE3	rE3
Name	Parameter verification error	
Description	· Data on the operation panel side and inverter side are different. · An error occurred in the EEPROM on the operation panel side during parameter verification.	
Check point	Check for the parameter setting of the source inverter and inverter to be verified.	
Corrective action	· Press SET to continue verification. Make parameter verification again. *(Refer to page 326.)* · Check for an operation panel (FR-DU07) failure. Please contact your sales representative.	

Operation Panel Indication	rE4	rE4
Name	Model error	
Description	· A different model was used for parameter write and verification during parameter copy. · When parameter copy write is stopped after parameter copy read is stopped	
Check point	· Check that the verified inverter is the same model. · Check that the power is not turned OFF or an operation panel is not disconnected, etc. during parameter copy read.	
Corrective action	· Use the same model (FR-F700 series) for parameter copy and verification. · Perform parameter copy read again.	

Operation Panel Indication	Err.	Err.
Description	· The RES signal is ON · PU and inverter cannot make normal communication (contact fault of the connector) · When the voltage drops in the inverter's input side. · When the control circuit power (R1/L11, S1/L21) and the main circuit power(R/L1, S/L2, T/L3) are connected to a separate power, it may appear at turning ON of the main circuit. It is not a fault.	
Corrective action	· Turn OFF the RES signal. · Check the connection of PU and inverter. · Check the voltage on the inverter's input side.	

(2) Warnings

When the protective function is activated, the output is not shut off.

Operation Panel Indication	OL	OL	FR-PU04 FR-PU07(-01)	OL
Name	Stall prevention (overcurrent)			
Description	During acceleration	When the output current of the inverter exceeds the stall prevention operation level (*Pr. 22 Stall prevention operation level*, etc.), this function stops the increase in frequency until the overload current decreases to prevent the inverter from resulting in overcurrent trip. When the overload current has decreased below stall prevention operation level, this function increases the frequency again.		
	During constant speed operation	When the output current of the inverter exceeds the stall prevention operation level (*Pr. 22 Stall prevention operation level*, etc.), this function lowers the frequency until the overload current decreases to prevent overcurrent trip. When the overload current has decreased below stall prevention operation level, this function increases the frequency up to the set value.		
	During deceleration	When the output current of the inverter exceeds the stall prevention operation level (*Pr. 22 Stall prevention operation level*, etc.), this function stops the decrease in frequency until the overload current decreases to prevent the inverter from resulting in overcurrent trip. When the overload current has decreased below stall prevention operation level, this function decreases the frequency again.		
Check point	· Check that the *Pr. 0 Torque boost* setting is not too large. (V/F control) · Check that the *Pr. 7 Acceleration time* and *Pr. 8 Deceleration time* settings are not too small. · Check that the load is not too heavy. · Are there any failure in peripheral devices? · Check that the *Pr. 13 Starting frequency* is not too large. · Check that the *Pr. 22 Stall prevention operation level* is appropriate.			
Corrective action	· Increase or decrease the *Pr. 0 Torque boost* value by 1% and check the motor status. (V/F control) *(Refer to page 78.)* · Set a larger value in *Pr. 7 Acceleration time* and *Pr. 8 Deceleration time*. *(Refer to page 101.)* · Reduce the load weight. Try Simple magnetic flux vector control *(Pr. 80)*. · Check the peripheral devices. · Adjust the *Pr.13* setting. Change the *Pr. 14 Load pattern selection* setting. (V/F control) · Set stall prevention operation current in *Pr. 22 Stall prevention operation level*. (The initial value is 110% *1.) The acceleration/deceleration time may change. Increase the stall prevention operation level with *Pr. 22 Stall prevention operation level*, or disable stall prevention with *Pr. 156 Stall prevention operation selection*. (Use *Pr. 156* to set either operation continued or not at OL operation.)			

*1 120% when LD is selected

Operation Panel Indication	oL	oL	FR-PU04 FR-PU07(-01)	oL
Name	Stall prevention (overcurrent)			
Description	During deceleration	· If the regenerative energy of the motor becomes excessive and exceeds the regenerative energy consumption capability, this function stops the decrease in frequency to prevent overvoltage trip. As soon as the regenerative energy has decreased, deceleration resumes. · If the regenerative energy of the motor becomes excessive when regeneration avoidance function is selected (*Pr. 882* = 1), this function increases the speed to prevent overvoltage trip. *(Refer to page 189.)*		
Check point	· Check for sudden speed reduction. · Regeneration avoidance function *(Pr. 882 to Pr. 886)* is being used? *(Refer to page 298.)*			
Corrective action	The deceleration time may change. Increase the deceleration time using *Pr. 8 Deceleration time*.			

Operation Panel Indication	PS	PS	FR-PU04 FR-PU07(-01)	PS
Name	PU stop			
Description	Stop with STOP RESET of PU is set in *Pr. 75 Reset selection/disconnected PU detection/PU stop selection*. (For *Pr. 75*, refer to *page 186*.)			
Check point	Check for a stop made by pressing STOP RESET of the operation panel.			
Corrective action	Turn the start signal OFF and release with PU EXT.			

Operation Panel Indication	RB	rb	FR-PU04 FR-PU07(-01)	RB
Name	Regenerative brake prealarm			
Description	Appears if the regenerative brake duty reaches or exceeds 85% of the *Pr. 70 Special regenerative brake duty* value. When the setting of *Pr. 70 Special regenerative brake duty* is the initial value (*Pr. 70* ="0"), this warning does not occur. If the regenerative brake duty reaches 100%, a regenerative overvoltage (E. OV_) occurs. The RBP signal can be simultaneously output with the [RB] display. For the terminal used for the RBP signal output, assign the function by setting "7" (positive logic) or "107" (negative logic) in any of *Pr. 190 to Pr. 196 (output terminal function selection)*. *(Refer to page 128)* Appears only for the FR-F720-03160 (FR-F740-01800) or more.			
Check point	· Check that the brake resistor duty is not high. · Check that the *Pr. 30 Regenerative function selection* and *Pr. 70 Special regenerative brake duty* values are correct.			
Corrective action	· Increase the deceleration time. · Check the *Pr. 30 Regenerative function selection* and *Pr. 70 Special regenerative brake duty* values.			

Operation Panel Indication	TH	TH	FR-PU04 FR-PU07(-01)	TH
Name	Electronic thermal relay function prealarm			
Description	Appears if the cumulative value of the *Pr. 9 Electronic thermal O/L relay* reaches or exceeds 85% of the preset level. If it reaches 100% of the *Pr. 9 Electronic thermal O/L relay* setting, a motor overload trip (E. THM) occurs. The THP signal can be simultaneously output with the [TH] display. For the terminal used for the THP signal output, assign the function by setting "8" (positive logic) or "108" (negative logic) in any of *Pr. 190 to Pr. 196 (output terminal function selection)*. *(Refer to page 128)*			
Check point	· Check for large load or sudden acceleration. · Is the *Pr. 9 Electronic thermal O/L relay* setting is appropriate? *(Refer to page 107.)*			
Corrective action	· Reduce the load weight or the number of operation times. · Set an appropriate value in *Pr. 9 Electronic thermal O/L relay*. *(Refer to page 107.)*			

Operation Panel Indication	MT	nr	FR-PU04 FR-PU07(-01)	——— MT
Name	Maintenance signal output			
Description	Indicates that the cumulative energization time of the inverter has reached a given time. When the setting of *Pr. 504 Maintenance timer alarm output set time* is the initial value (*Pr. 504* = "9999"), this protective function does not function.			
Check point	The *Pr. 503 Maintenance timer* setting is larger than the *Pr. 504 Maintenance timer alarm output set time* setting. *(Refer to page 304.)*			
Corrective action	Setting "0" in *Pr. 503 Maintenance timer* erases the signal.			

Operation Panel Indication	CP	CP	FR-PU04 FR-PU07(-01)	——— CP
Name	Parameter copy			
Description	Appears when parameters are copied between models with capacities of FR-F720-02330 (FR-F740-01160) or less and FR-F720-03160 (FR-F740-01800) or more.			
Check point	Resetting of *Pr.9, Pr.30, Pr.51, Pr.52, Pr.54, Pr.56, Pr.57, Pr.70, Pr.72, Pr.80, Pr.90, Pr.158, Pr.190 to Pr.196, Pr.557* and *Pr.893* is necessary.			
Corrective action	Set the initial value in *Pr. 989 Parameter copy alarm release*.			

(3) Alarm

When an alarm occurs, the output is not shut off. You can also output an alarm signal by making parameter setting. (Set "98" in any of *Pr. 190 to Pr. 196 (output terminal function selection)*. *(Refer to page 128.)*

Operation Panel Indication	FN	Fn	FR-PU04 FR-PU07(-01)	FN
Name	Fan alarm			
Description	For the inverter that contains a cooling fan, Fn appears on the operation panel when the cooling fan stops due to a fault or different operation from the setting of *Pr. 244 Cooling fan operation selection*.			
Check point	Check the cooling fan for an alarm.			
Corrective action	Check for fan failure. Please contact your sales representative.			

(4) Fault

When a fault occurs, the inverter trips and a fault signal is output.

Operation Panel Indication	E.OC1	E.OC1	FR-PU04 FR-PU07(-01)	OC During Acc
Name	Overcurrent trip during acceleration			
Description	When the inverter output current reaches or exceeds approximately 170% of the rated current during acceleration, the protective circuit is activated to stop the inverter output.			
Check point	· Check for sudden acceleration. · Check that the downward acceleration time is not long in vertical lift application. · Check for output short circuit. · Check that the *Pr. 3 Base frequency* setting is not 60Hz when the motor rated frequency is 50Hz. · Check if the stall prevention operation level is set too high. · Check if the fast-response current limit operation is disabled. · Check that the regeneration is not performed frequently. (Check that the output voltage becomes larger than the V/F reference voltage at regeneration and overcurrent occurs due to the high voltage.) · Check if a start command is given to the inverter while the motor is coasting.			
Corrective action	· Increase the acceleration time. (Shorten the downward acceleration time in vertical lift application.) · When "E.OC1" is always lit at starting, disconnect the motor once and start the inverter. If "E.OC1" is still lit, contact your sales representative. · Check the wiring to make sure that output short circuit does not occur. · Set the *Pr. 3 Base frequency* to 50Hz. *(Refer to page 89.)* · Lower the setting of stall prevention operation level. *(Refer to page 81.)* · Activate the fast-response current limit operation. · Set base voltage (rated voltage of the motor, etc.) in *Pr. 19 Base frequency voltage*. *(Refer to page 89.)* · Input a start command after the motor stops. Alternatively, use the automatic restart after instantaneous power failure/flying start function. *(Refer to page 152.)*			

Operation Panel Indication	E.OC2	E.OC2	FR-PU04 FR-PU07(-01)	Stedy Spd OC
Name	Overcurrent trip during constant speed			
Description	When the inverter output current reaches or exceeds approximately 170% of the rated current during constant speed operation, the protective circuit is activated to stop the inverter output.			
Check point	· Check for sudden load change. · Check for output short circuit. · Check if the stall prevention operation level is set too high. · Check if the fast-response current limit operation is disabled. · Check if a start command is given to the inverter while the motor is coasting.			
Corrective action	· Keep load stable. · Check the wiring to avoid output short circuit. · Lower the setting of stall prevention operation level. *(Refer to page 81.)* · Activate the fast-response current limit operation. · Input a start command after the motor stops. Alternatively, use the automatic restart after instantaneous power failure/flying start function. *(Refer to page 152.)*			

Operation Panel Indication	E.OC3	E.OC3	FR-PU04 FR-PU07(-01)	OC During Dec
Name	Overcurrent trip during deceleration or stop			
Description	When the inverter output current reaches or exceeds approximately 170% of the rated inverter current during deceleration (other than acceleration or constant speed), the protective circuit is activated to stop the inverter output.			
Check point	· Check for sudden speed reduction. · Check for output short circuit. · Check for too fast operation of the motor's mechanical brake. · Check if the stall prevention operation level is set too high. · Check if the fast-response current limit operation is disabled. · Check if a start command is given to the inverter while the motor is coasting.			
Corrective action	· Increase the deceleration time. · Check the wiring to avoid output short circuit. · Check the mechanical brake operation. · Lower the setting of stall prevention operation level. *(Refer to page 81.)* · Activate the fast-response current limit operation. · Input a start command after the motor stops. Alternatively, use the automatic restart after instantaneous power failure/flying start function. *(Refer to page 152.)*			

Operation Panel Indication	E.OV1	E.Ov1	FR-PU04 FR-PU07(-01)	OV During Acc
Name	Regenerative overvoltage trip during acceleration			
Description	If regenerative energy causes the inverter's internal main circuit DC voltage to reach or exceed the specified value, the protective circuit is activated to stop the inverter output. The circuit may also be activated by a surge voltage produced in the power supply system.			
Check point	· Check for too slow acceleration. (e.g. during descending acceleration with lifting load) · Check if *Pr. 22 Stall prevention operation level* is set too low like the no-load current.			

Corrective action	· Decrease the acceleration time.
	  · Use regeneration avoidance function *(Pr. 882 to Pr. 886)*.
	  (Refer to page 298.)
	· Set a value larger than the no load current in *Pr. 22 Stall prevention operation level*.			

Operation Panel Indication	E.OV2	E.Ov2	FR-PU04 FR-PU07(-01)	Stedy Spd OV
Name	Regenerative overvoltage trip during constant speed			
Description	If regenerative energy causes the inverter's internal main circuit DC voltage to reach or exceed the specified value, the protective circuit is activated to stop the inverter output. The circuit may also be activated by a surge voltage produced in the power supply system.			
Check point	· Check for sudden load change. · Check if *Pr. 22 Stall prevention operation level* is set too low like the no-load current.			

Corrective action	· Keep load stable.
	  · Use regeneration avoidance function *(Pr. 882 to Pr. 886)*.
	  (Refer to page 298.)
	  · Use the brake unit or power regeneration common converter (FR-CV) as required.
	· Set a value larger than the no load current in *Pr. 22 Stall prevention operation level.*			

Operation Panel Indication	E.OV3	E.Ov3	FR-PU04 FR-PU07(-01)	OV During Dec
Name	Regenerative overvoltage trip during deceleration or stop			
Description	If regenerative energy causes the inverter's internal main circuit DC voltage to reach or exceed the specified value, the protective circuit is activated to stop the inverter output. The circuit may also be activated by a surge voltage produced in the power supply system.			
Check point	Check for sudden speed reduction.			
Corrective action	· Increase the deceleration time. (Set the deceleration time which matches the moment of inertia of the load) · Longer the brake cycle. · Use regeneration avoidance function *(Pr. 882 to Pr. 886)*. *(Refer to page 298.)* · Use the brake unit or power regeneration common converter (FR-CV) as required.			

Operation Panel Indication	E.THT	E.THT	FR-PU04 FR-PU07(-01)	Inv. Overload
Name	Inverter overload trip (electronic thermal relay function) *1			
Description	If a current not less than 110%*2 of the rated output current flows and overcurrent trip does not occur (170% or less), the electronic thermal relay activates to stop the inverter output in order to protect the output transistors. (Overload capacity 110%*2 60s inverse-time characteristic)			
Check point	· Check that acceleration/deceleration time is not too short. · Check that *Pr. 0 Torque boost* setting is not too large (small). (V/F control) · Check that *Pr. 14 Load pattern selection* setting is appropriate for the load pattern of the using machine. (V/F control) · Check the motor for use under overload.			
Corrective action	· Increase acceleration/deceleration time. · Adjust the *Pr. 0 Torque boost* setting. · Set the *Pr. 14 Load pattern selection* setting according to the load pattern of the using machine. (V/F control) · Reduce the load weight.			

*1 Resetting the inverter initializes the internal thermal integrated data of the electronic thermal relay function.
*2 120% when LD is selected

Operation Panel Indication	E.THM	E.THM	FR-PU04 FR-PU07(-01)	Motor Ovrload
Name	Motor overload trip (electronic thermal relay function) *1			
Description	The electronic thermal relay function in the inverter detects motor overheat due to overload or reduced cooling capability during constant-speed operation and pre-alarm (TH display) is output when the integrated value reaches 85% of the *Pr. 9 Electronic thermal O/L relay* setting and the protection circuit is activated to stop the inverter output when the integrated value reaches the specified value. When running a special motor such as a multi-pole motor or multiple motors, provide a thermal relay on the inverter output side since such motor(s) cannot be protected by the electronic thermal relay function.			
Check point	· Check the motor for use under overload. · Check that the setting of *Pr. 71 Applied motor* for motor selection is correct. *(Refer to page 111.)* · Check that stall prevention operation setting is correct.			
Corrective action	· Reduce the load weight. · For a constant-torque motor, set the constant-torque motor in *Pr. 71 Applied motor*. · Check that stall prevention operation setting is correct. *(Refer to page 81.)*			

*1 Resetting the inverter initializes the internal thermal integrated data of the electronic thermal relay function.

Operation Panel Indication	E.FIN	E.FIn	FR-PU04 FR-PU07(-01)	H/Sink O/Temp
Name	Heatsink overheat			
Description	If the heatsink overheats, the temperature sensor is actuated to stop the inverter output. The FIN signal can be output when the temperature becomes approximately 85% of the heatsink overheat protection operation temperature. For the terminal used for the FIN signal output, assign the function by setting "26" (positive logic) or "126" (negative logic) in any of *Pr. 190 to Pr. 196 (output terminal function selection)*. *(Refer to page 128)*			
Check point	· Check for too high surrounding air temperature. · Check for heatsink clogging. · Check that the cooling fan is stopped. (Check that Fn is displayed on the operation panel.)			
Corrective action	· Set the surrounding air temperature to within the specifications. · Clean the heatsink. · Replace the cooling fan.			

Operation Panel Indication	E.IPF	E.IPF	FR-PU04 FR-PU07(-01)	Inst. Pwr. Loss
Name	Instantaneous power failure			
Description	If a power failure occurs for longer than 15ms (this also applies to inverter input shut-off), the instantaneous power failure protective function is activated to trip the inverter in order to prevent the control circuit from malfunctioning. If a power failure persists for longer than 100ms, the fault output is not provided, and the inverter restarts if the start signal is ON upon power restoration. (The inverter continues operating if an instantaneous power failure is within 15ms.) In some operating status (load magnitude, acceleration/deceleration time setting, etc.), overcurrent or other protection may be activated upon power restoration. When instantaneous power failure protection is activated, the IPF signal is output. *(Refer to page 152)*			
Check point	Find the cause of instantaneous power failure occurrence.			
Corrective action	· Remedy the instantaneous power failure. · Prepare a backup power supply for instantaneous power failure. · Set the function of automatic restart after instantaneous power failure (*Pr. 57*). *(Refer to page 152.)*			

Operation Panel Indication	E.BE	E.bE	FR-PU04 FR-PU07(-01)	Br. Cct. Fault
Name	Brake transistor alarm detection/internal circuit fault			
Description	This function stops the inverter output if a fault occurs in the brake circuit, e.g. damaged brake transistors when using functions of the FR-F720-03160 (FR-F740-01800) or more. In this case, the inverter must be powered OFF immediately. For the FR-F720-02330 (FR-F740-01160) or less, it appears when an internal circuit error occurred.			
Check point	· Reduce the load inertia. · Check that the frequency of using the brake is proper. · Check that the brake resistor selected is correct.			
Corrective action	For the FR-F720-03160 (FR-F740-01800) or more, when the protective function is activated even if the above measures are taken, replace the brake unit with a new one. For the FR-F720-02330 (FR-F740-01160) or less, replace the inverter.			

Operation Panel Indication	E.UVT	E.UvT	FR-PU04 FR-PU07(-01)	Under Voltage
Name	Undervoltage			
Description	If the power supply voltage of the inverter decreases, the control circuit will not perform normal functions. In addition, the motor torque will be insufficient and/or heat generation will increase. To prevent this, if the power supply voltage decreases below about 150V (300VAC for the 400V class), this function stops the inverter output. When a jumper is not connected across P/+ and P1, the undervoltage protective function is activated. When undervoltage protection is activated, the IPF signal is output. *(Refer to page 152)*			
Check point	· Check for start of large-capacity motor. · Check that a jumper or DC reactor is connected across terminals P/+ and P1.			
Corrective action	· Check the power supply system equipment such as the power supply. · Connect a jumper or DC reactor across terminals P/+ and P1. · If the problem still persists after taking the above measure, please contact your sales representative.			

Operation Panel Indication	E.ILF	E.ILF	FR-PU04 FR-PU07(-01)	Fault 14 Input phase loss
Name	Input phase loss			
Description	This fault is output when function valid setting (=1) is set in *Pr. 872 Input phase loss protection selection* and one phase of the three phase power input is lost. When the setting of *Pr. 872 Input phase loss protection selection* is the initial value (*Pr. 872* = "0"), this fault does not occur. *(Refer to page 162.)*			
Check point	Check for a break in the cable for the three-phase power supply input.			
Corrective action	· Wire the cables properly. · Repair a break portion in the cable. · Check the *Pr. 872 Input phase loss protection selection* setting.			

Operation Panel Indication	E.OLT	E.OLT	FR-PU04 FR-PU07(-01)	Stll Prev STP (OL shown during stall prevention operation)
Name	Stall prevention stop			
Description	If the frequency has fallen to 0.5Hz by stall prevention operation and remains for 3s, a fault (E.OLT) appears and trips the inverter. OL appears while stall prevention is being activated.			
Check point	· Check the motor for use under overload. *(Refer to page 82.)*			
Corrective action	· Reduce the load weight.			

Operation Panel Indication	E.GF	E. GF	FR-PU04 FR-PU07(-01)	Ground Fault
Name	Output side earth (ground) fault overcurrent			
Description	This function stops the inverter output if an earth (ground) fault overcurrent flows due to an earth (ground) fault that occurred on the inverter's output (load) side.			
Check point	Check for an earth (ground) fault in the motor and connection cable.			
Corrective action	Remedy the earth (ground) fault portion.			

Operation Panel Indication	E.LF	E. LF	FR-PU04 FR-PU07(-01)	E. LF
Name	Output phase loss			
Description	This function stops the inverter output if one of the three phases (U, V, W) on the inverter's output side (load side) is lost.			
Check point	· Check the wiring (Check that the motor is normal.) · Check that the capacity of the motor used is not smaller than that of the inverter. · Check if a start command is given to the inverter while the motor is coasting.			
Corrective action	· Wire the cables properly. · Check the *Pr. 251 Output phase loss protection selection* setting. · Input a start command after the motor stops. Alternatively, use the automatic restart after instantaneous power failure/flying start function. *(Refer to page 152.)*			

Operation Panel Indication	E.OHT	E.OHT	FR-PU04 FR-PU07(-01)	OH Fault
Name	External thermal relay operation			
Description	If the external thermal relay provided for motor overheat protection, or the internally mounted temperature relay in the motor, etc. switches ON (contacts open), the inverter output is stopped. Functions when "7" (OH signal) is set to any of *Pr. 178 to Pr. 189 (input terminal function selection)*. When the initial value (without OH signal assigned) is set, this protective function does not function.			
Check point	· Check for motor overheating. · Check that the value of 7 (OH signal) is set correctly in any of *Pr. 178 to Pr. 189 (input terminal function selection)*.			
Corrective action	· Reduce the load and operating duty. · Even if the relay contacts are reset automatically, the inverter will not restart unless it is reset.			

Operation Panel Indication	E.PTC	E.PTC	FR-PU04 FR-PU07(-01)	Fault 14 PTC activated
Name	PTC thermistor operation			
Description	Trips when the motor overheat status is detected for 10s or more by the external PTC thermistor input connected to the terminal AU. This fault functions when "63" is set in *Pr. 184 AU terminal function selection* and AU/PTC switchover switch is set in PTC side. When the initial value (*Pr. 184* = "4") is set, this protective function does not function.			
Check point	· Check the connection between the PTC thermistor switch and thermal relay protector. · Check the motor for operation under overload. · Is valid setting (= 63) selected in *Pr. 184 AU terminal function selection* ? *(Refer to page 110, 122.)*			
Corrective action	Reduce the load weight.			

Operation Panel Indication	E.OPT Ver.UP	E.OPT	FR-PU04 FR-PU07(-01)	Option Fault
Name	Option fault			
Description	· Appears when the AC power supply is connected to the terminal R/L1, S/L2, T/L3 accidentally when a high power factor converter is connected. · Appears when the switch for the manufacturer setting of the plug-in option is changed. · Appears when a communication option is connected while *Pr. 296* = "0 or 100".			
Check point	· Check that the AC power supply is not connected to the terminal R/L1, S/L2, T/L3 when a high power factor converter (FR-HC, MT-HC) or power regeneration common converter (FR-CV) is connected. · Check if password lock is activated by setting *Pr. 296* = "0, 100"			
Corrective action	· Check the parameter (*Pr. 30*) setting and wiring. · The inverter may be damaged if the AC power supply is connected to the terminal R/L1, S/L2, T/L3 when a high power factor converter is connected. Please contact your sales representative. · Return the switch for the manufacturer setting of the plug-in option to the initial status. (Refer to instruction manual of each option) · To apply the password lock when installing a communication option, set *Pr.296* ≠ "0,100". (*Refer to page* 192). · If the problem still persists after taking the above measure, please contact your sales representative.			

Ver.UP … Specifications differ according to the date assembled. *Refer to page 400* to check the SERIAL number.

Operation Panel Indication	E.OP1 E.OP2 Ver.UP	E.OP1 E.OP2	FR-PU04 FR-PU07(-01)	Option 1 Fault Option 2 Fault
Name	Communication option fault			
Description	Stops the inverter output when a communication line fault occurs in the communication option.			
Check point	· Check for a wrong option function setting and operation. · Check that the plug-in option is plugged into the connector securely. · Check for a break in the communication cable. · Check that the terminating resistor is fitted properly.			
Corrective action	· Check the option function setting, etc. · Connect the plug-in option securely. · Check the connection of communication cable.			

Ver.UP … Specifications differ according to the date assembled. *Refer to page 400* to check the SERIAL number.

Operation Panel Indication	E. 1 E. 2 Ver.UP	E. 1 E. 2	FR-PU04 FR-PU07(-01)	Fault 1, Fault2
Name	Option fault			
Description	Stops the inverter output when a contact fault is found between the inverter and the plug-in option, or when the communication option is connected to a connector other than the bottom connector. Appears when the switch for the manufacturer setting of the plug-in option is changed.			
Check point	· Check that the plug-in option is plugged into the connector securely. (1 and 2 indicate the option connector numbers.) · Check for excess electrical noises around the inverter. · Check that the communication option is not fitted to the connector other than the bottom connector.			
Corrective action	· Connect the plug-in option securely. · Take measures against noises if there are devices producing excess electrical noises around the inverter. If the problem still persists after taking the above measure, please contact your sales representative or distributor. · Fit the communication option to the connector other than the bottom connector. · Return the switch position for the manufacturer setting of the plug-in option to the initial status. *(Refer to instruction manual of each option)*			

Ver.UP … Specifications differ according to the date assembled. *Refer to page 400* to check the SERIAL number.

Operation Panel Indication	E.PE	E.PE	FR-PU04 FR-PU07(-01)	Corrupt Memry
Name	Parameter storage device fault (control circuit board)			
Description	Trips when a fault occurred in the parameter stored. (EEPROM failure)			
Check point	Check for too many number of parameter write times.			
Corrective action	Please contact your sales representative. When performing parameter write frequently for communication purposes, set "1" in *Pr. 342* to enable RAM write. Note that powering OFF returns the inverter to the status before RAM write.			

Operation Panel Indication	E.PE2	E.PE2	FR-PU04	Fault 14
			FR-PU07(-01)	PR storage alarm
Name	Parameter storage device fault (main circuit board)			
Description	Trips when a fault occurred in the parameter stored. (EEPROM failure)			
Check point	————————			
Corrective action	Please contact your sales representative.			

Operation Panel Indication	E.PUE	E.PUE	FR-PU04 FR-PU07(-01)	PU Leave Out
Name	PU disconnection			
Description	· This function stops the inverter output if communication between the inverter and PU is suspended, e.g. the operation panel and parameter unit is disconnected, when "2", "3", "16" or "17", "102", "103", "116" or "117" was set in *Pr. 75 Reset selection/disconnected PU detection/PU stop selection.* · This function stops the inverter output when communication errors occurred consecutively for more than permissible number of retries when a value other than "9999" is set in *Pr. 121 Number of PU communication retries* during the RS-485 communication with the PU connector. · This function stops the inverter output if communication is broken for the period of time set in *Pr. 122 PU communication check time interval* during the RS-485 communication with the PU connector.			
Check point	· Check that the FR-DU07 or parameter unit (FR-PU04/FR-PU07) is fitted tightly. · Check the *Pr. 75* setting.			
Corrective action	Fit the FR-DU07 or parameter unit (FR-PU04/FR-PU07) securely.			

Operation Panel Indication	E.RET	E.rET	FR-PU04 FR-PU07(-01)	Retry No Over
Name	Retry count excess			
Description	If operation cannot be resumed properly within the number of retries set, this function trips the inverter. Functions only when *Pr. 67 Number of retries at fault occurrence* is set. When the initial value (*Pr. 67* = "0") is set, this fault does not occur.			
Check point	Find the cause of fault occurrence.			
Corrective action	Eliminate the cause of the fault preceding this error indication.			

Operation Panel Indication	E. 5	E. 5	FR-PU04 FR-PU07(-01)	Fault 5
	E. 6	E. 6		Fault 6
	E. 7	E. 7		Fault 7
	E.CPU	E.CPU		CPU Fault
Name	CPU fault			
Description	Stops the inverter output if the communication fault of the built-in CPU occurs.			
Check point	Check for devices producing excess electrical noises around the inverter.			
Corrective action	· Take measures against noises if there are devices producing excess electrical noises around the inverter. · Please contact your sales representative.			

Operation Panel Indication	E.CTE	E.CTE	FR-PU04 FR-PU07(-01)	E.CTE
Name	Operation panel power supply short circuit, RS-485 terminal power supply short circuit			
Description	When the operation panel power supply (PU connector) is shorted, this function shuts off the power output and stops the inverter output. At this time, the operation panel (parameter unit) cannot be used and RS-485 communication from the PU connector cannot be made. When the internal power supply for RS-485 terminals are shorted, this function shuts off the power output. At this time, communication from the RS-485 terminals cannot be made. To reset, enter the RES signal or switch power OFF, then ON again.			
Check point	· Check for a short circuit in the PU connector cable. · Check that the RS-485 terminals are connected correctly.			
Corrective action	· Check the PU and cable. · Check the connection of the RS-485 terminals			

Operation Panel Indication	E.P24	E.P24	FR-PU04 FR-PU07(-01)	E.P24
Name	24VDC power output short circuit			
Description	When the 24VDC power output from the PC terminal is shorted, this function shuts off the power output. At this time, all external contact inputs switch OFF. The inverter cannot be reset by entering the RES signal. To reset it, use the operation panel or switch power OFF, then ON again.			
Check point	· Check for a short circuit in the PC terminal output.			
Corrective action	· Remedy the earth (ground) fault portion.			

Operation Panel Indication	E.CDO	E.CdO	FR-PU04	Fault 14
			FR-PU07(-01)	OC detect level
Name	Output current detection value exceeded			
Description	This functions stops the inverter output when the output current exceeds the setting of *Pr.150 Output current detection level*, or the output current falls below the setting of *Pr.152 Zero current detection level*. This function is active when *Pr. 167 Output current detection operation selection* is set to "1, 10, 11". When the initial value (*Pr. 167* = "0") is set, this fault does not occur.			
Check point	Check the settings of *Pr. 150 Output current detection level*, *Pr. 151 Output current detection signal delay time*, *Pr. 152 Zero current detection level*, *Pr. 153 Zero current detection time, Pr. 166 Output current detection signal retention time*, *Pr. 167 Output current detection operation selection*. *(Refer to page 135.)*			

Operation Panel Indication	E.IOH	E.IOH	FR-PU04	Fault 14
			FR-PU07(-01)	Inrush overheat
Name	Inrush current limit circuit fault			
Description	Trips when the resistor of the inrush current limit circuit overheats. The inrush current limit circuit fault			
Check point	· Check that frequent power ON/OFF is not repeated. · Check that no meltdown is found in the primary side fuse (5A) in the power supply circuit of the inrush current suppression circuit contactor (FR-F740-03250 or more) or no fault is found in the power supply circuit of the contactor. · Check that the power supply circuit of inrush current limit circuit contactor is not damaged.			
Corrective action	Configure a circuit where frequent power ON/OFF is not repeated. If the problem still persists after taking the above measure, please contact your sales representative.			

Operation Panel Indication	E.SER	E.SEr	FR-PU04	Fault 14
			FR-PU07(-01)	VFD Comm error
Name	Communication fault (inverter)			
Description	This function stops the inverter output when communication error occurs consecutively for more than permissible retry count when a value other than "9999" is set in *Pr. 335 RS-485 communication retry count* during RS-485 communication from the RS-485 terminals. This function also stops the inverter output if communication is broken for the period of time set in *Pr. 336 RS-485 communication check time interval*.			
Check point	Check the RS-485 terminal wiring.			
Corrective action	Perform wiring of the RS-485 terminals properly.			

Operation Panel Indication	E.AIE	E.AI E	FR-PU04	Fault 14
			FR-PU07(-01)	Analog in error
Name	Analog input fault			
Description	Stops the inverter output when 30mA or higher current is input to terminal 2 or 4 while current input is selected with *Pr. 73 Analog input selection* or *Pr. 267 Terminal 4 input selection*. The function also stops the inverter output when voltage (7.5V or higher) is input.			
Check point	Check the setting of *Pr. 73 Analog input selection* and *Pr. 267 Terminal 4 input selection*. *(Refer to page 171.)*			
Corrective action	Either give a frequency command by current input or set *Pr. 73 Analog input selection* or *Pr. 267 Terminal 4 input selection* to voltage input.			

Operation Panel Indication	E.PID	E.PI d	FR-PU04	Fault 14
			FR-PU07	Fault
			FR-PU07-01	PID Signal Error
Name	PID signal fault			
Description	If any of PID upper limit (FUP), PID lower limit (FDN), and PID deviation limit (Y48) turns ON during PID control, inverter shuts off the output. This function is active under the following parameter settings: *Pr.554 PID signal operation selection* ≠ "0,10", *Pr.131 PID upper limit* ≠ "9999", *Pr.132 PID lower limit* ≠ "9999", and *Pr.553 PID deviation limit* ≠ "9999". This protective function is not active in the initial setting (*Pr.554* = "0", *Pr.131* = "9999", *Pr.132* = "9999", *Pr.553* = "9999").			
Check Point	Check if the measured PID value is greater than the upper limit *(Pr.131)* or smaller than the lower limit *(Pr.132)*. Check if the absolute PID deviation value is greater than the limit value *(Pr.553)*.			
Corrective Action	Make correct settings for *Pr.131 PID upper limit*, *Pr.132 PID lower limit*, *Pr.553 PID deviation limit*. *(Refer to page 261)*			

Operation Panel Indication	E.13	E. 13	FR-PU04 FR-PU07(-01)	Fault 13
Name	Internal circuit fault			
Description	Trips when an internal circuit error occurred.			
Corrective action	Please contact your sales representative.			

Operation Panel Indication	E.PCH	E.PCH	FR-PU04	Fault 14
			FR-PU07	Fault
			FR-PU07-01	Precharge Error
Name	Pre-charge fault			
Description	When the pre-charged time exceeds the *Pr.764 (Pr.769) Pre-charge time limit*, or the pre-charged amount exceeds *Pr. 763 (Pr. 768) Pre-charge upper detection level*, the protective circuit activates, and the inverter output is shutoff. This function is available when *Pr.764 (Pr.769) Pre-charge time limit* or *Pr. 763 (Pr. 768) Pre-charge upper detection level* is set. This protective function is not available in the initial status. *(Refer to page 261)*			
Check point	· Check if the *Pr.764 (Pr.769) Pre-charge time limit* setting is too low. · Check if the *Pr. 763 (Pr. 768) Pre-charge upper detection level* setting is too low. · Check if the automatic switchover frequency set in *Pr.127 (Pr.754)* is too low. · Check if there is a break in the connection with a pump.			
Corrective action	· Set the *Pr.764 (Pr.769) Pre-charge time limit* setting higher. · Set the *Pr. 763 (Pr. 768) Pre-charge upper detection level* setting higher. · Set the automatic switchover frequency higher in *Pr.127 (Pr.754)*. · Check the connection with a pump.			

Operation Panel Indication	E.LCI	E.LCI	FR-PU04	Fault 14
			FR-PU07	Fault
			FR-PU07-01	Lost mA Input
Name	4mA input fault			
Description	When the analog input current stays at 2mA or lower for the time period set in *Pr.778 Current input check filter*, the protective circuit activates, and the inverter output is shutoff. The function is available when *Pr.573 4mA input check selection* ="2 or 3." This protective function is not available in the initial status. *(Refer to page 182)*			
Check point	· Check if the wire used for the analog current input has a break. · Check if the *Pr.778 Current input check filter* setting is too low.			
Corrective action	· Check the wiring for the analog current input. · Set the *Pr.778 Current input check filter* setting higher.			

CAUTION

- If protective functions of E.ILF, E.PTC, E.PE2, E.CDO, E.IOH, E.SER, E.AIE, E.PID, E.PCH, E.LCI are activated when using the FR-PU04, "Fault 14" appears.
  Also when the faults history is checked on the FR-PU04, the display is "E.14".
- If faults other than the above appear, contact your sales representative.

5.4 Correspondences between digital and actual characters

There are the following correspondences between the actual alphanumeric characters and the digital characters displayed on the operation panel.

Actual	Digital
0	0
1	1
2	2
3	3
4	4
5	5
6	6
7	7
8	8
9	9

Actual	Digital
A	A
B	b
C	C
D	d
E	E
F	F
G	G
H	H
I	I
J	J
L	L

Actual	Digital
M	M
N	n
O	O
o	o
P	P
S	S
T	T
U	U
V	v
r	r
-	-

5.5 Check first when you have a trouble

5.5.1 Motor does not start

Check points	Possible Cause	Countermeasures	Refer to page
Main Circuit	Appropriate power supply voltage is not applied. (Operation panel display is not provided.)	Power ON a moulded case circuit breaker (MCCB), an earth leakage circuit breaker (ELB), or a magnetic contactor (MC).	—
		Check for the decreased input voltage, input phase loss, and wiring.	
		If only the control power is ON when using a separate power source for the control circuit, turn ON the main circuit power.	25
	Motor is not connected properly.	Check the wiring between the inverter and the motor. If commercial power supply-inverter switchover function is active, check the wiring of the magnetic contactor connected between the inverter and the motor.	16
	The jumper across P/+ and P1 is disconnected. (FR-F720-02330 (01160) or less)	Securely fit a jumper across P/+ and P1. When using a DC reactor (FR-HEL), remove the jumper across P/+ and P1, and then connect the DC reactor.	16
Input Signal	Start signal is not input.	Check the start command source, and input a start signal. PU operation mode: FWD / REV External operation mode : STF/STR signal	197
	Both the forward and reverse rotation start signals (STF, STR) are input simultaneously.	Turn ON only one of the forward and reverse rotation start signals (STF or STR). If STF and STR signals are turned ON simultaneously in the initial setting, a stop command is given.	27
	Frequency command is zero. (FWD or REV LED on the operation panel is flickering.)	Check the frequency command source and enter a frequency command.	197
	AU signal is not ON when terminal 4 is used for frequency setting. (FWD or REV LED on the operation panel is flickering.)	Turn ON the AU signal. Turning ON the AU signal activates terminal 4 input.	171
	Output stop signal (MRS) or reset signal (RES) is ON. (FWD or REV LED on the operation panel is flickering.)	Turn MRS or RES signal OFF. Inverter starts the operation with a given start command and a frequency command after turning OFF MRS or RES signal. Before turning OFF, ensure the safety.	152
	CS signal is OFF when automatic restart after instantaneous power failure function is selected (*Pr. 57* ≠ "9999"). (FWD or REV LED on the operation panel is flickering.)	Turn ON the CS signal. Restart operation is enabled when restart after instantaneous power signal (CS) is ON.	152
	Jumper connector of sink - source is wrongly selected. (FWD or REV LED on the operation panel is flickering.)	Check that the control logic switchover jumper connector is correctly installed. If it is not installed correctly, input signal is not recognized.	30
	Voltage/current input switch is not correctly set for analog input signal (0 to 5V/0 to 10V, 4 to 20mA). (FWD or REV LED on the operation panel is flickering.)	Set *Pr. 73, Pr. 267*, and a voltage/current input switch correctly, then input an analog signal in accordance with the setting.	27
	STOP RESET was pressed. (Operation panel indication is PS (PS).)	During the External operation mode, check the method of restarting from a STOP RESET input stop from PU.	336
	Two-wire or three-wire type connection is wrong.	Check the connection. Connect STOP signal when three-wire type is used.	126

Check points	Possible Cause	Countermeasures	Refer to page
Parameter Setting	*Pr. 0 Torque boost* setting is improper when V/F control is used.	Increase *Pr. 0* setting by 0.5% increments while observing the rotation of a motor. If that makes no difference, decrease the setting.	*78*
	Pr. 78 Reverse rotation prevention selection is set.	Check the *Pr. 78* setting. Set *Pr. 78* when you want to limit the motor rotation to only one direction.	*190*
	Pr. 79 Operation mode selection setting is wrong.	Select the operation mode which corresponds with input methods of start command and frequency command.	*195*
	Bias and gain *(calibration parameter C2 to C7)* settings are improper.	Check the bias and gain *(calibration parameter C2 to C7)* settings.	*177*
	Pr. 13 Starting frequency setting is greater than the running frequency.	Set running frequency higher than *Pr. 13*. The inverter does not start if the frequency setting signal is less than the value set in *Pr. 13*.	*104*
	Frequency settings of various running frequency (such as multi-speed operation) are zero. Especially, *Pr. 1 Maximum frequency* is zero.	Set the frequency command according to the application. Set *Pr. 1* higher than the actual frequency used.	*87*
	Pr. 15 Jog frequency setting is lower than *Pr. 13 Starting frequency*.	Set *Pr. 15 Jog frequency* higher than *Pr. 13 Starting frequency.*	*95*
	Operation mode and a writing device do not match.	Check *Pr. 79, Pr. 338, Pr. 339, Pr. 550, Pr. 551,* and select an operation mode suitable for the purpose.	*195, 204*
	Start signal operation selection is set by the *Pr. 250 Stop selection*	Check *Pr. 250* setting and connection of STF and STR signals.	*126*
	Inverter decelerated to a stop when power failure deceleration stop function is selected.	When power is restored, ensure the safety, and turn OFF the start signal once, then turn ON again to restart. Inverter restarts when *Pr. 261*="2, 22".	*156*
	Automatic restart after instantaneous power failure function or power failure stop function is activated. (Performing overload operation during input phase loss may cause voltage insufficiency, and that may result in detection of power failure.)	• Set *Pr. 872 Input phase loss protection selection* = "1" (input phase failure protection active). • Disable the automatic restart after instantaneous power failure function and power failure stop function. • Reduce the load. • Increase the acceleration time if the automatic restart after instantaneous power failure function or power failure stop function occurred during acceleration.	*152, 156, 162*
	DC feeding mode 1 or mode 2 is not selected in *Pr.30 Regenerative function selection* even though the DC is fed through terminal P and N.	Set the DC feeding mode in *Pr.30 Regenerative function selection*.	*114*
Load	Load is too heavy.	Reduce the load.	—
	Shaft is locked.	Inspect the machine (motor).	—

5.5.2 Motor or machine is making abnormal acoustic noise

When operating the inverter with the carrier frequency of 3kHz or more set in *Pr. 72*, the carrier frequency will automatically decrease if the output current of the inverter exceeds the value in parenthesis of the rated output current on *page 370*. This may cause the motor noise to increase. But it is not a fault.

Check points	Possible Cause	Countermeasures	Refer to page
Input signal	Disturbance due to EMI when frequency command is given from analog input (terminal 1, 2, 4).	Take countermeasures against EMI.	46
Parameter Setting		Increase the *Pr. 74 Input filter time constant* if steady operation cannot be performed due to EMI.	176
Parameter Setting	No carrier frequency noises (metallic noises) are generated.	In the initial setting, *Pr. 240 Soft-PWM operation selection* is enabled to change motor noise to an unoffending complex tone. Therefore, no carrier frequency noises (metallic noises) are generated. Set *Pr. 240* = "0" to disable this function.	169
	Resonance occurs. (output frequency)	Set *Pr. 31 to Pr. 36 (Frequency jump)*. When it is desired to avoid resonance attributable to the natural frequency of a mechanical system, these parameters allow resonant frequencies to be jumped.	88
	Resonance occurs. (carrier frequency)	Change *Pr. 72 PWM frequency selection* setting. Changing the PWM carrier frequency produces an effect on avoiding the resonance frequency of a mechanical system or a motor.	169
	Gain adjustment during PID control is insufficient.	To stabilize the measured value, change the proportional band (*Pr. 129*) to a larger value, the integral time (*Pr. 130*) to a slightly longer time, and the differential time (*Pr. 134*) to a slightly shorter time. Check the calibration of set point and measured value.	261
Others	Mechanical looseness	Adjust machine/equipment so that there is no mechanical looseness.	—
	Contact the motor manufacturer.		
Motor	Operating with output phase loss	Check the motor wiring.	—

5.5.3 Inverter generates abnormal noise

Check points	Possible Cause	Countermeasures	Refer to page
Fan	Fan cover was not correctly installed when a cooling fan was replaced.	Install a fan cover correctly.	360

5.5.4 Motor generates heat abnormally

Check points	Possible Cause	Countermeasures	Refer to page
Motor	Motor fan is not working (Dust is accumulated.)	Clean the motor fan. Improve the environment.	—
	Phase to phase insulation of the motor is insufficient.	Check the insulation of the motor.	—
Main Circuit	The inverter output voltage (U, V, W) are unbalanced.	Check the output voltage of the inverter. Check the insulation of the motor.	357
Parameter Setting	The *Pr. 71 Applied motor* setting is wrong.	Check the *Pr. 71 Applied motor* setting.	111
—	Motor current is large.	Refer to "5.5.11 Motor current is too large"	352

5.5.5 Motor rotates in the opposite direction

Check points	Possible Cause	Countermeasures	Refer to page
Main Circuit	Phase sequence of output terminals U, V and W is incorrect.	Connect phase sequence of the output cables (terminal U, V, W) to the motor correctly	16
Input signal	The start signals (forward rotation, reverse rotation) are connected improperly.	Check the wiring. (STF: forward rotation , STR: reverse rotation)	27
	The polarity of the frequency command is negative during the polarity reversible operation set by *Pr. 73 Analog input selection*.	Check the polarity of the frequency command.	171

5.5.6 Speed greatly differs from the setting

Check points	Possible Cause	Countermeasures	Refer to page
Input signal	Frequency setting signal is incorrectly input.	Measure the input signal level.	—
	The input signal lines are affected by external EMI.	Take countermeasures against EMI such as using shielded wires for input signal lines.	48
Parameter Setting	*Pr. 1, Pr. 2, Pr. 18, calibration parameter C2 to C7* settings are improper.	Check the settings of *Pr. 1 Maximum frequency, Pr. 2 Minimum frequency, Pr. 18 High speed maximum frequency.*	87
		Check the *calibration parameter C2 to C7* settings.	177
	Pr. 31 to Pr. 36 (frequency jump) settings are improper.	Narrow down the range of frequency jump.	88
Load	Stall prevention function is activated due to a heavy load.	Reduce the load weight.	—
Parameter Setting		Set *Pr. 22 Stall prevention operation level* higher according to the load. (Setting *Pr. 22* too large may result in frequent overcurrent trip (E.OC☐).)	81
Motor		Check the capacities of the inverter and the motor.	—

5.5.7 Acceleration/deceleration is not smooth

Check points	Possible Cause	Countermeasures	Refer to page
Parameter Setting	Acceleration/deceleration time is too short.	Increase acceleration/deceleration time.	101
	Torque boost (*Pr. 0, Pr. 46*) setting is improper under V/F control, so the stall prevention function is activated.	Increase/decrease *Pr. 0 Torque boost* setting value by 0.5% increments to the setting.	78
	The base frequency does not match the motor characteristics.	Set *Pr. 3 Base frequency and Pr. 47 Second V/F (base frequency)*.	89
	Regeneration avoidance operation is performed	If the frequency becomes unstable during regeneration avoidance operation, decrease the setting of *Pr. 886 Regeneration avoidance voltage gain*.	298
Load	Stall prevention function is activated due to a heavy load.	Reduce the load weight.	—
Parameter Setting		Set *Pr. 22 Stall prevention operation level* higher according to the load. (Setting *Pr. 22* too large may result in frequent overcurrent trip (E.OC☐).)	81
Motor		Check the capacities of the inverter and the motor.	—

5.5.8 Speed varies during operation

Check points	Possible Cause	Countermeasures	Refer to page
Load	Load varies during an operation. (V/F Control)	Select Simple magnetic flux vector control	79
Input signal	Frequency setting signal is varying.	Check the frequency setting signal.	—
	The frequency setting signal is affected by EMI.	Set filter to the analog input terminal using *Pr. 74 Input filter time constant*.	176
		Take countermeasures against EMI, such as using shielded wires for input signal lines.	48
	Malfunction is occurring due to the undesirable current generated when the transistor output unit is connected.	Use terminal PC (terminal SD when source logic) as a common terminal to prevent a malfunction caused by undesirable current.	31
	Multi-speed command signal is chattering.	Take countermeasures to suppress chattering.	—
Parameter Setting	Fluctuation of power supply voltage is too large.	Change the *Pr. 19 Base frequency voltage* setting (about 3%) under V/F control.	89
	Pr. 80 Motor capacity setting is improper for the capacities of the inverter and the motor for Simple magnetic flux vector control.	Check the *Pr. 80 Motor capacity* setting.	79
	Wiring length is too long for V/F control, and a voltage drop occurs.	Adjust *Pr. 0 Torque boost* by increasing with 0.5% increments for low-speed operation.	78
		Change to Simple magnetic flux vector control.	79
	Hunting occurs by the generated vibration, for example, when structural rigidity at load side is insufficient.	Disable automatic control functions, such as energy saving operation, fast-response current limit function, regeneration avoidance function, Simple magnetic flux vector control and stall prevention. For PID control, set smaller values to *Pr.129 PID proportional band* and *Pr.130 PID integral time*. Adjust so that the control gain decreases and the level of safety increases.	—
		Change *Pr. 72 PWM frequency selection* setting.	169

5.5.9 Operation mode is not changed properly

Check points	Possible Cause	Countermeasures	Refer to page
Input signal	Start signal (STF or STR) is ON.	Check that the STF and STR signals are OFF. When either is ON, the operation mode cannot be changed.	195
Parameter Setting	*Pr. 79* setting is improper.	When *Pr. 79 Operation mode selection* setting is "0" (initial value), the inverter is placed in the External operation mode at input power ON. To switch to the PU operation mode, press PU/EXT on the operation panel (press PU when the parameter unit (FR-PU04/FR-PU07) is used) . At other settings (1 to 4, 6, 7), the operation mode is limited accordingly.	195
	Operation mode and a writing device do not correspond.	Check *Pr. 79, Pr. 338, Pr. 339, Pr. 550, Pr. 551,* and select an operation mode suitable for the purpose.	195, 204

5.5.10 Operation panel (FR-DU07) display is not operating

Check points	Possible Cause	Countermeasures	Refer to page
Main Circuit, Control Circuit	Power is not input.	Input the power.	14
Front cover	Operation panel is not properly connected to the inverter.	Check if the inverter front cover is installed securely. The inverter cover may not fit properly when using wires whose size are 1.25mm^2 or larger, or when using many wires, and this could cause a contact fault of the operation panel.	6

5.5.11 Motor current is too large

Check points	Possible Cause	Countermeasures	Refer to page
Parameter Setting	Torque boost (*Pr. 0, Pr. 46*) setting is improper under V/F control, so the stall prevention function is activated.	Increase/decrease *Pr. 0 Torque boost* setting value by 0.5% increments to the setting.	78
	V/F pattern is improper. (*Pr. 3, Pr. 14, Pr. 19*)	Set rated frequency of the motor to *Pr. 3 Base frequency*. Use *Pr. 19 Base frequency voltage* to set the base voltage (e.g. rated motor voltage).	89
		Change *Pr. 14 Load pattern selection* according to the load characteristic. (V/F control)	91
	Stall prevention function is activated due to a heavy load.	Reduce the load weight.	—
		Set *Pr. 22 Stall prevention operation level* higher according to the load. (Setting *Pr. 22* too large may result in frequent overcurrent trip (E.OC☐).)	81
		Check the capacities of the inverter and the motor.	—

5.5.12 Speed does not accelerate

Check points	Possible Cause	Countermeasures	Refer to page
Input signal	Start command and frequency command are chattering.	Check if the start command and the frequency command are correct.	—
	The wiring length used for analog frequency command is too long, and it is causing a voltage (current) drop.	Perform analog input bias/gain calibration.	177
	Input signal lines are affected by external EMI.	Take countermeasures against EMI, such as using shielded wires for input signal lines.	48
Parameter Setting	*Pr. 1, Pr. 2, Pr. 18, calibration parameter C2 to C7* settings are improper.	Check the settings of *Pr. 1 Maximum frequency and Pr. 2 Minimum frequency*. If you want to run the motor at 120Hz or higher, set *Pr. 18 High speed maximum frequency.*	87
		Check the *calibration parameter C2 to C7* settings.	177
	The maximum voltage (current) input value is not set during the external operation. *(Pr.125, Pr.126, Pr.18)*	Check the *Pr.125 Terminal 2 frequency setting gain frequency* and *Pr.126 Terminal 4 frequency setting gain frequency* settings. To operate at 120Hz or higher, set *Pr.18 High speed maximum frequency*.	87, 177
	Torque boost (*Pr. 0, Pr. 46*) setting is improper under V/F control, so the stall prevention function is activated.	Increase/decrease *Pr. 0 Torque boost* setting value by 0.5% increments so that stall prevention does not occur.	78
	V/F pattern is improper. *(Pr. 3, Pr. 14, Pr. 19)*	Set rated frequency of the motor to *Pr. 3 Base frequency*. Use *Pr. 19 Base frequency voltage* to set the base voltage (e.g. rated motor voltage).	89
		Change *Pr. 14 Load pattern selection* according to the load characteristic. (V/F control)	91
	Stall prevention function is activated due to a heavy load.	Reduce the load weight.	—
		Set *Pr. 22 Stall prevention operation level* higher according to the load. (Setting *Pr. 22* too large may result in frequent overcurrent trip (E.OC□).)	81
		Check the capacities of the inverter and the motor.	—
	During PID control, output frequency is automatically controlled to make measured value = set point.		261

5.5.13 Unable to write parameter setting

Check points	Possible Cause	Countermeasures	Refer to page
Input signal	Operation is being performed (signal STF or STR is ON).	Stop the operation. When *Pr. 77* = "0" (initial value), write is enabled only during a stop.	189
Parameter Setting	You are attempting to set the parameter in the External operation mode.	Choose the PU operation mode. Or, set *Pr. 77* = "2" to enable parameter write regardless of the operation mode.	189
	Parameter is disabled by the *Pr. 77 Parameter write selection* setting.	Check *Pr. 77 Parameter write selection* setting.	189
	Key lock is activated by the *Pr. 161 Frequency setting/key lock operation selection* setting.	Check *Pr. 161 Frequency setting/key lock operation selection* setting.	315
	Operation mode and a writing device do not correspond.	Check *Pr. 79, Pr. 338, Pr. 339, Pr. 550, Pr. 551,* and select an operation mode suitable for the purpose.	195, 204

5.5.14 Power lamp is not lit

Check points	Possible Cause	Countermeasures	Refer to page
Main Circuit, Control Circuit	Wiring or installation is improper.	Check for the wiring and the installation. Power lamp is lit when power supply is input to the control circuit (R1/L11, S1/L21).	16

MEMO

6 PRECAUTIONS FOR MAINTENANCE AND INSPECTION

This chapter describes the "PRECAUTIONS FOR MAINTENANCE AND INSPECTION" of this product.
Always read the instructions before using the equipment.

6.1 Inspection item 356
6.2 Measurement of main circuit voltages, currents and powers 363

The inverter is a static unit mainly consisting of semiconductor devices. Daily inspection must be performed to prevent any fault from occurring due to the adverse effects of the operating environment, such as temperature, humidity, dust, dirt and vibration, changes in the parts with time, service life, and other factors.

• Precautions for maintenance and inspection

For some short time after the power is switched OFF, a high voltage remains in the smoothing capacitor. When accessing the inverter for inspection, wait for at least 10 minutes after the power supply has been switched OFF, and then make sure that the voltage across the main circuit terminals P/+ and N/− of the inverter is not more than 30VDC using a tester, etc.

6.1 Inspection item

6.1.1 Daily inspection

Basically, check for the following faults during operation.
(1) Motor operation fault
(2) Improper installation environment
(3) Cooling system fault
(4) Unusual vibration and noise
(5) Unusual overheat and discoloration

6.1.2 Periodic inspection

Check the areas inaccessible during operation and requiring periodic inspection.
Consult us for periodic inspection.
1) Check for cooling system fault ..... Clean the air filter, etc.
2) Tightening check and retightening ..... The screws and bolts may become loose due to vibration, temperature changes, etc.
Tighten them according to the specified tightening torque. *(Refer to page 21.)*
3) Check the conductors and insulating materials for corrosion and damage.
4) Measure insulation resistance.
5) Check and change the cooling fan and relay.

6.1.3 Daily and periodic inspection

Area of Inspection	Inspection Item	Inspection Item	Interval: Daily	Interval: Periodic *2	Corrective Action at Alarm Occurrence	Customer's Check
General	Surrounding environment	Check the surrounding air temperature, humidity, dirt, corrosive gas, oil mist , etc	○		Improve environment	
	Overall unit	Check for unusual vibration and noise	○		Check alarm location and retighten	
	Power supply voltage	Check that the main circuit voltages and control voltages are normal *1	○		Inspect the power supply	
Main circuit	General	(1)Check with megger (across main circuit terminals and earth (ground) terminal).		○	Contact the manufacturer	
		(2)Check for loose screws and bolts.		○	Retighten	
		(3)Check for overheat traces on the parts.		○	Contact the manufacturer	
		(4)Check for stain		○	Clean	
	Conductors, cables	(1)Check conductors for distortion.		○	Contact the manufacturer	
		(2)Check cable sheaths for breakage and deterioration (crack, discoloration, etc.)		○	Contact the manufacturer	
	Transformer/reactor	Check for unusual odor and abnormal increase in whining sound.	○		Stop the device and contact the manufacturer.	
	Terminal block	Check for damage.		○	Stop the device and contact the manufacturer.	
	Smoothing aluminum electrolytic capacitor	(1)Check for liquid leakage.		○	Contact the manufacturer	
		(2)Check for safety valve projection and bulge.		○	Contact the manufacturer	
		(3)Visual check and judge by the life check of the main circuit capacitor *(Refer to page 358)*		○		
	Relay/contactor	Check that the operation is normal and no chatter is heard.		○	Contact the manufacturer	
Control circuit protective circuit	Operation check	(1)Check that the output voltages across phases with the inverter operated alone is balanced		○	Contact the manufacturer	
		(2)Check that no fault is found in protective and display circuits in a sequence protective operation test.		○	Contact the manufacturer	
	Parts check: Overall	(1)Check for unusual odor and discoloration.		○	Stop the device and contact the manufacturer.	
		(2)Check for serious rust development		○	Contact the manufacturer	
	Parts check: Aluminum electrolytic capacitor	(1)Check for liquid leakage in a capacitor and deformation trace		○	Contact the manufacturer	
		(2)Visual check and judge by the life check of the control circuit capacitor. *(Refer to page 358.)*		○		
Cooling system	Cooling fan	(1)Check for unusual vibration and noise.	○		Replace the fan	
		(2)Check for loose screws and bolts		○	Fix with the fan cover fixing screws	
		(3)Check for stain		○	Clean	
	Heatsink	(1)Check for clogging		○	Clean	
		(2)Check for stain		○	Clean	
	Air filter, etc.	(1)Check for clogging		○	Clean or replace	
		(2)Check for stain		○	Clean or replace	
Display	Indication	(1)Check that display is normal.	○		Contact the manufacturer	
		(2)Check for stain		○	Clean	
	Meter	Check that reading is normal	○		Stop the device and contact the manufacturer.	
Load motor	Operation check	Check for vibration and abnormal increase in operation noise	○		Stop the device and contact the manufacturer.	

*1 It is recommended to install a device to monitor voltage for checking the power supply voltage to the inverter.
*2 One to two years of periodic inspection cycle is recommended. However, it differs according to the installation environment. Consult us for periodic inspection.

6.1.4 Display of the life of the inverter parts

The self-diagnostic alarm is output when the life span of the control circuit capacitor, cooling fan, each parts of the inrush current limit circuit is near its end. It gives an indication of replacement time .

The life alarm output can be used as a guideline for life judgement.

Parts	Judgement level
Main circuit capacitor	85% of the initial capacity
Control circuit capacitor	Estimated 10% life remaining
Inrush current limit circuit	Estimated 10% life remaining (Power ON: 100,000 times left)
Cooling fan	Less than 50% of the predetermined speed

Refer to page 301 to perform the life check of the inverter parts.

6.1.5 Checking the inverter and converter modules

<Preparation>

(1) Disconnect the external power supply cables (R/L1, S/L2, T/L3) and motor cables (U, V, W).
(2) Prepare a tester. (Use 100Ω range.)

<Checking method>

Change the polarity of the tester alternately at the inverter terminals R/L1, S/L2, T/L3, U, V, W, P/+ and N/–, and check for electric continuity.

CAUTION

1. Before measurement, check that the smoothing capacitor is discharged.
2. At the time of electric discontinuity, due to the smoothing capacitor, the tester may not indicate ∞. At the time of electric continuity, the measured value is several to several ten-of ohms depending on the module type, circuit tester type, etc. If all measured values are almost the same, the modules are without fault.

<Module device numbers and terminals to be checked>

		Tester Polarity ⊕	Tester Polarity ⊖	Measured Value		Tester Polarity ⊕	Tester Polarity ⊖	Measured Value
Converter module	D1	R/L1	P/+	Discontinuity	D4	R/L1	N/–	Continuity
		P/+	R/L1	Continuity		N/–	R/L1	Discontinuity
	D2	S/L2	P/+	Discontinuity	D5	S/L2	N/–	Continuity
		P/+	S/L2	Continuity		N/–	S/L2	Discontinuity
	D3	T/L3	P/+	Discontinuity	D6	T/L3	N/–	Continuity
		P/+	T/L3	Continuity		N/–	T/L3	Discontinuity
Inverter module	TR1	U	P/+	Discontinuity	TR4	U	N/–	Continuity
		P/+	U	Continuity		N/–	U	Discontinuity
	TR3	V	P/+	Discontinuity	TR6	V	N/–	Continuity
		P/+	V	Continuity		N/–	V	Discontinuity
	TR5	W	P/+	Discontinuity	TR2	W	N/–	Continuity
		P/+	W	Continuity		N/–	W	Discontinuity

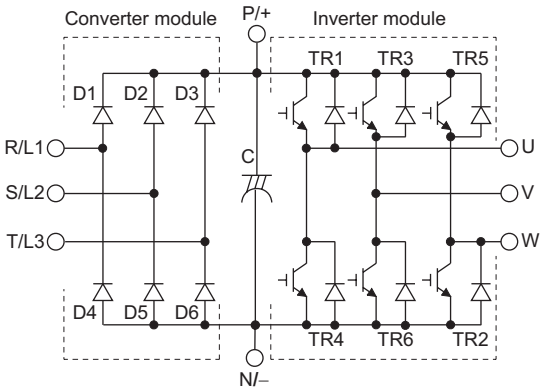

(Assumes the use of an analog meter.)

6.1.6 Cleaning

Always run the inverter in a clean status.
When cleaning the inverter, gently wipe dirty areas with a soft cloth immersed in neutral detergent or ethanol.

CAUTION

Do not use solvent, such as acetone, benzene, toluene and alcohol, as they will cause the inverter surface paint to peel off.
The display, etc. of the operation panel (FR-DU07) and parameter unit (FR-PU04/FR-PU07) are vulnerable to detergent and alcohol. Therefore, avoid using them for cleaning.

6.1.7 Replacement of parts

The inverter consists of many electronic parts such as semiconductor devices.
The following parts may deteriorate with age because of their structures or physical characteristics, leading to reduced performance or fault of the inverter. For preventive maintenance, the parts must be replaced periodically.
Use the life check function as a guidance of parts replacement.

Part Name	Standard Replacement Interval *1	Description
Cooling fan	10 years	Replace (as required)
Main circuit smoothing capacitor	10 years *2	Replace (as required)
On-board smoothing capacitor	10 years	Replace the board (as required)
Relays	–	as required
Fuse (FR-F740-04320 or more)	10 years	Replace the fuse (as required)

*1 Replacement years for when the yearly average surrounding air temperature is 40°C (104°F) (without corrosive gas, flammable gas, oil mist, dust and dirt etc)
*2 Output current : 80% of the inverter rated current

CAUTION

For parts replacement, consult the nearest Mitsubishi FA Center.

(1) Cooling fan

The replacement interval of the cooling fan used for cooling the parts generating heat such as the main circuit semiconductor is greatly affected by the surrounding air temperature. When unusual noise and/or vibration is noticed during inspection, the cooling fan must be replaced immediately.

• Removal (FR-F720-00105 to 04750, FR-F740-00083 to 03610)
1) Push the hooks from above and remove the fan cover.

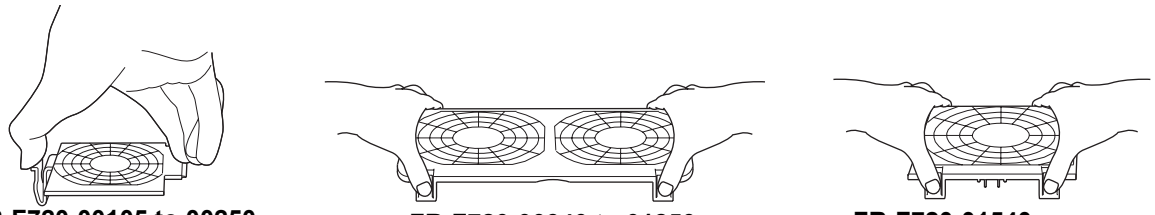

FR-F720-00105 to 00250
FR-F740-00083, 00126

FR-F720-00340 to 01250
FR-F740-00170 to 00620

FR-F720-01540 or more
FR-F740-00770 to 03610

2) Disconnect the fan connectors.
3) Remove the fan.

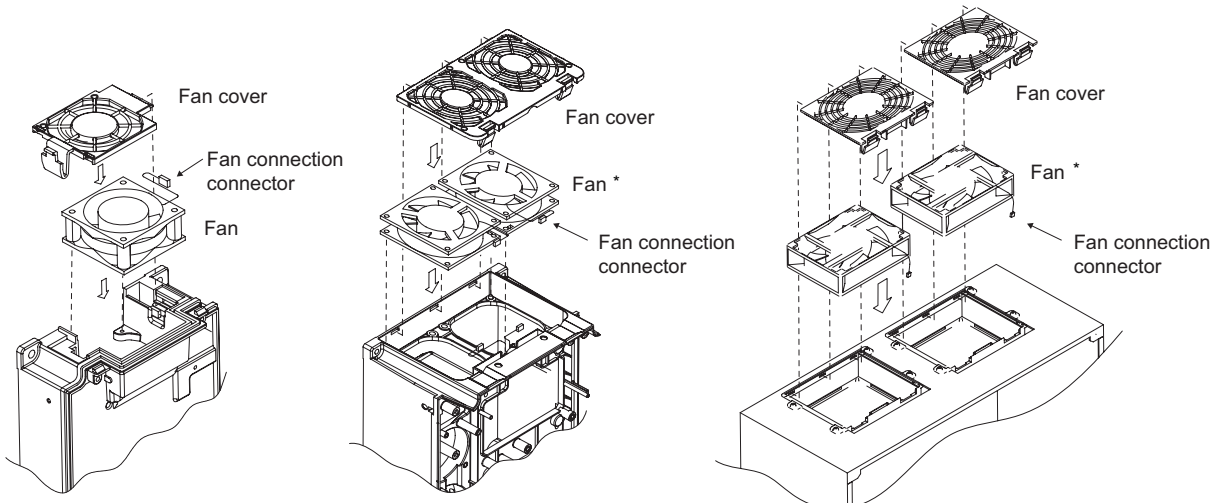

FR-F720-00105 to 00250
FR-F740-00083, 00126

FR-F720-00340 to 01250
FR-F740-00170 to 00620

FR-F720-01540 or more
FR-F740-00770 to 03610

* The number of cooling fans differs according to the inverter capacity.

• Reinstallation (FR-F720-00105 to 04750, FR-F740-00083 to 03610)

1)After confirming the orientation of the fan, reinstall the fan so that the arrow on the left of "AIR FLOW" faces up.

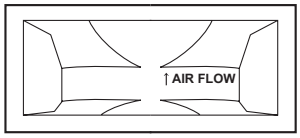

<Fan side face>

2)Reconnect the fan connectors.

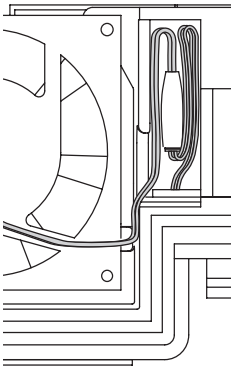

FR-F720-00105 to 00250
FR-F740-00083, 00126

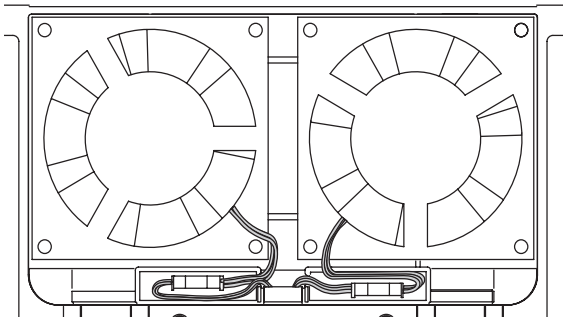

FR-F720-00340 to 00630
FR-F740-00170 to 00380

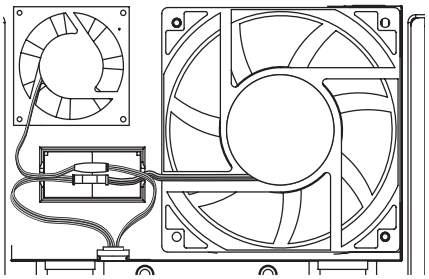

FR-F720-01250

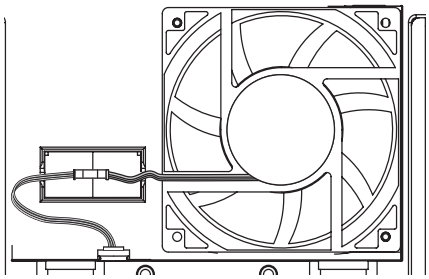

FR-F720-00770, 00930
FR-F740-00470, 00620

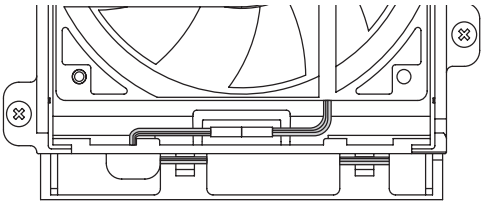

FR-F720-01540 to 04750
FR-F740-00770 to 03610

3) Reinstall the fan cover.

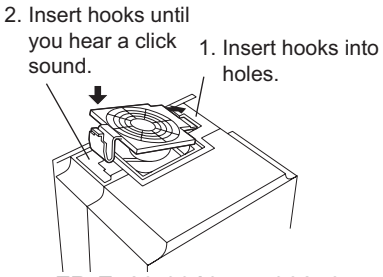

FR-F720-00105 to 00250
FR-F740-00083, 00126

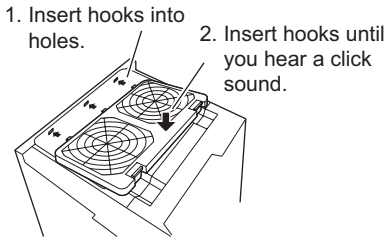

FR-F720-00340 to 01250
FR-F740-00170 to 00620

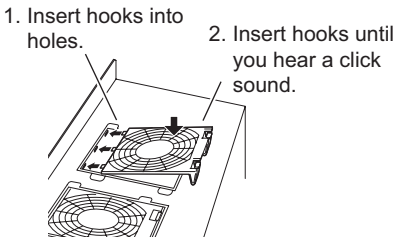

FR-F720-01540 to 04750
FR-F740-00770 to 03610

CAUTION

- Installing the fan in the opposite of air flow direction can cause the inverter life to be shorter.
- When installing the fan, use care to prevent wires from being caught between the inverter and fan.
- Switch the power OFF before replacing fans. Since the inverter circuits are charged with voltage even after power OFF, replace fans only when the inverter cover is on the inverter to prevent an electric shock accident.

- Removal (FR-F740-04320 or more)
  1) Remove a fan cover.
  2) After removing a fan connector, remove a fan block.
  3) Remove a fan.

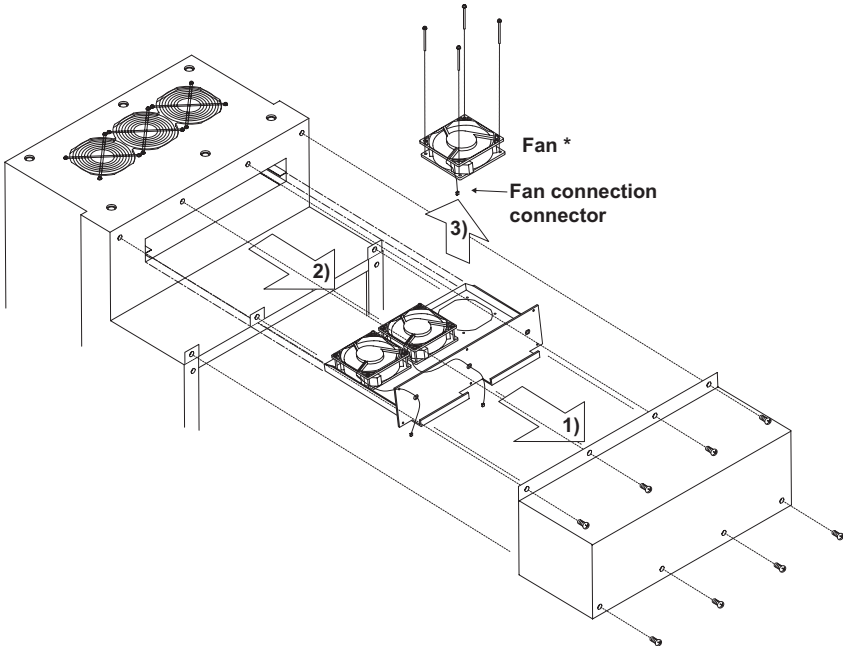

* The number of cooling fans differs according to the inverter capacity.

- Reinstallation (FR-F740-04320 or more)
  1) After confirming the orientation of the fan, reinstall the fan so that the arrow on the left of "AIR FLOW" faces up.

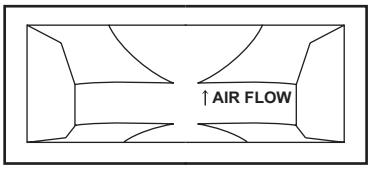

<Fan side face>

  2) Install fans referring to the above figure.

CAUTION

- Installing the fan in the opposite of air flow direction can cause the inverter life to be shorter.
- When installing the fan, use care to prevent wires from being caught between the inverter and fan.
- Switch the power OFF before replacing fans. Since the inverter circuits are charged with voltage even after power OFF, replace fans only when the inverter cover is on the inverter to prevent an electric shock accident.

(2) Replacement procedure of the cooling fan when using a heatsink protrusion attachment (FR-A7CN)

When replacing a cooling fan, remove a top cover of the heatsink protrusion attachment and perform replacement. After replacing the cooling fan, replace the top cover in the original position.

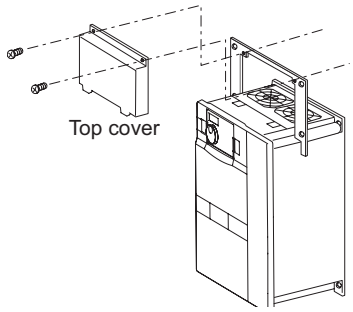

(3) Smoothing capacitors

A large-capacity aluminum electrolytic capacitor is used for smoothing in the main circuit DC section, and an aluminum electrolytic capacitor is used for stabilizing the control power in the control circuit. Their characteristics are deteriorated by the adverse effects of ripple currents, etc.
The replacement intervals greatly vary with the surrounding air temperature and operating conditions. When the inverter is operated in air-conditioned, normal environment conditions, replace the capacitors about every 10 years.
The appearance criteria for inspection are as follows:
1) Case: Check the side and bottom faces for expansion
2) Sealing plate: Check for remarkable warp and extreme crack.
3) Check for external crack, discoloration, fluid leakage, etc. Judge that the capacitor has reached its life when the measured capacitance of the capacitor reduced below 80% of the rating.

Refer to page 359 to perform the life check of the main circuit capacitor.

(4) Relays

To prevent a contact fault, etc., relays must be replaced according to the cumulative number of switching times (switching life).

6.1.8 Inverter replacement

The inverter can be replaced with the control circuit wiring kept connected. Before replacement, remove the wiring cover of the inverter.

1) Loosen the two installation screws in both ends of the control circuit terminal block. (These screws cannot be removed.) Pull down the terminal block from behind the control circuit terminals.

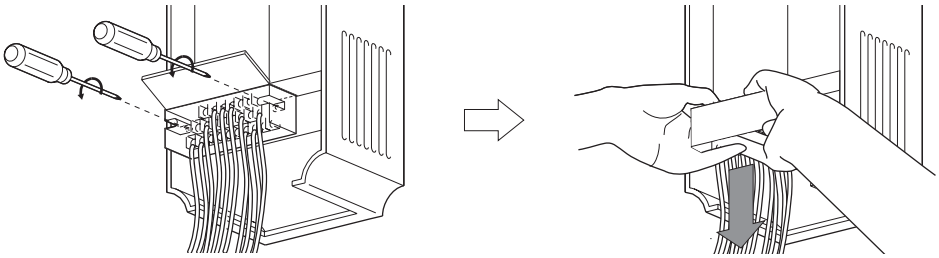

2) Using care not to bend the pins of the inverter's control circuit connector, reinstall the control circuit terminal block and fix it with the mounting screws.

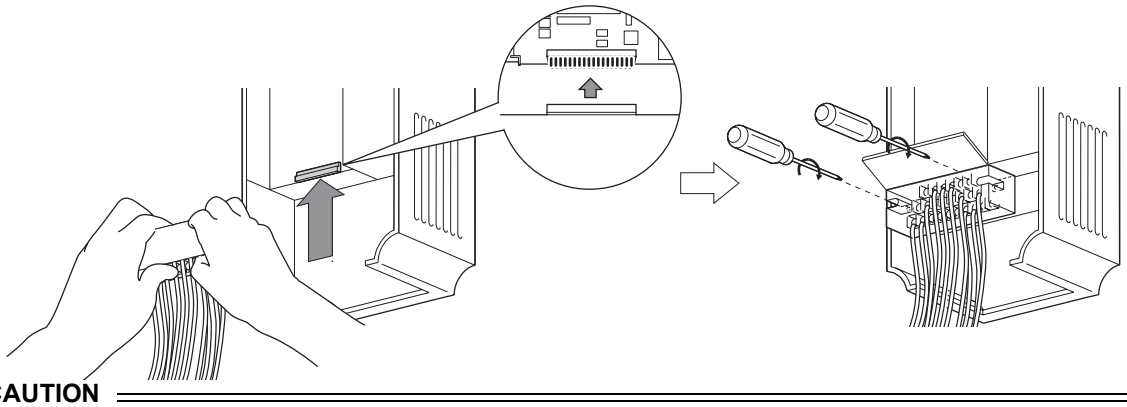

CAUTION

Before starting inverter replacement, switch power OFF, wait for at least 10 minutes, and then check the voltage with a tester and such to ensure safety.

6.2 Measurement of main circuit voltages, currents and powers

6.2.1 Measurement of voltages and currents

Since the voltages and currents on the inverter power supply and output sides include harmonics, measurement data depends on the instruments used and circuits measured.
When instruments for commercial frequency are used for measurement, measure the following circuits with the instruments given on the next page.

- When installing meters etc. on the inverter output side
  When the inverter-to-motor wiring length is large, especially in the 400V class, small-capacity models, the meters and CTs may generate heat due to line-to-line leakage current. Therefore, choose the equipment which has enough allowance for the current rating.
  When measuring and indicating the output voltage and output current of the inverter, it is recommended to utilize the AM and CA terminal output function of the inverter.

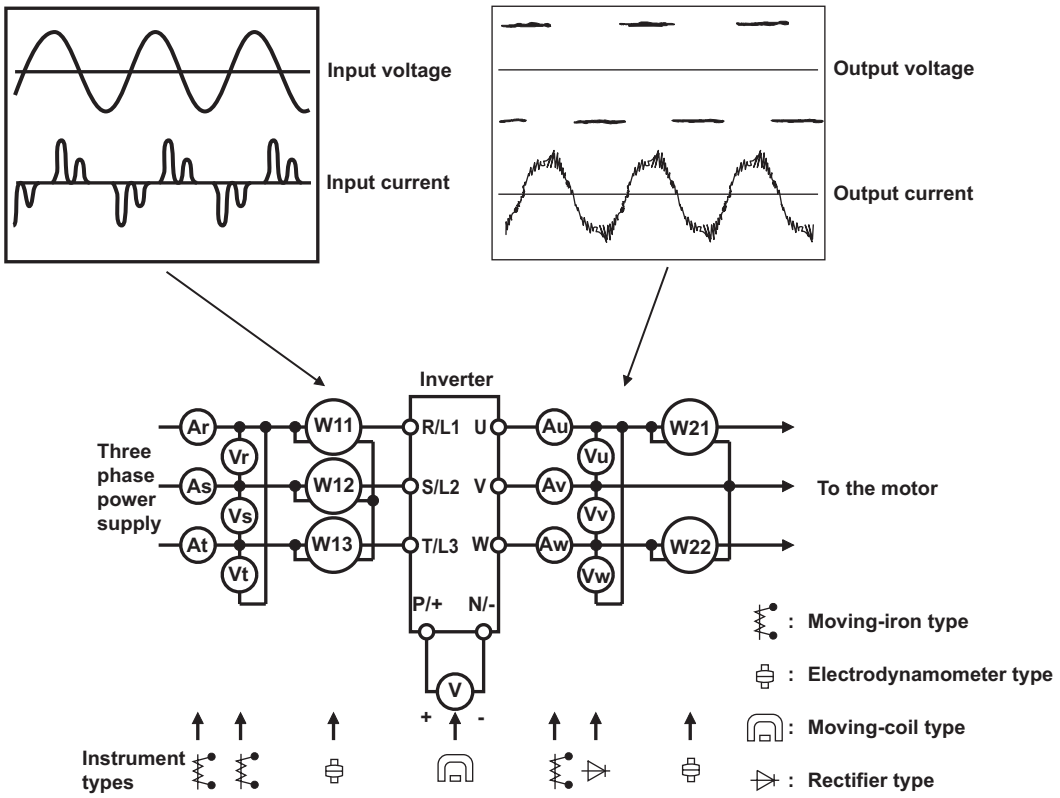

Examples of Measuring Points and Instruments

Measuring Points and Instruments

Item	Measuring Point	Measuring Instrument	Remarks (Reference Measured Value)
Power supply voltage V_1	Across R/L1and S/L2, S/L2 and T/L3, T/L3 and R/L1	Moving-iron type AC voltmeter *4	Commercial power supply Within permissible AC voltage fluctuation Refer to *page 370*.
Power supply side current I_1	R/L1, S/L2, and T/L3 line currents	Moving-iron type AC ammeter *4	
Power supply side power P_1	R/L1, S/L2, T/L3 and R/L1 and S/L2, S/L2 and T/L3, T/L3 and R/L1	Digital power meter (designed for inverter) or electrodynamic type single-phase wattmeter	P1=W11+W12+W13 (3-wattmeter method)
Power supply side power factor Pf_1	Calculate after measuring power supply voltage, power supply side current and power supply side power. $Pf_1 = \frac{P_1}{\sqrt{3}\,V_1 \times I_1} \times 100\%$		
Output side voltage V_2	Across U and V, V and W and W and U	Rectifier type AC voltage meter *1 *4 (Moving-iron type cannot measure)	Difference between the phases is within ±1% of the maximum output voltage.
Output side current I_2	U, V and W line currents	Moving-iron type AC ammeter *2 *4	Difference between the phases is 10% or lower of the rated inverter current.
Output side power P_2	U, V, W and U and V, V and W	Digital power meter (designed for inverter) or electrodynamic type single-phase wattmeter	$P_2 = W_{21} + W_{22}$ 2-wattmeter method (or 3-wattmeter method)
Output side power factor Pf_2	Calculate in similar manner to power supply side power factor. $Pf_2 = \frac{P_2}{\sqrt{3}\,V_2 \times I_2} \times 100\%$		
Converter output	Across P/+ and N/–	Moving-coil type (such as tester)	Inverter LED display is lit. 1.35 × V1
Frequency setting signal	Across 2, 4 (positive) and 5	Moving-coil type (Tester and such may be used) (Internal resistance: 50kΩ or larger)	0 to 10VDC, 4 to 20mA "5" is common
	Across 1 (positive) and 5		0 to ±5VDC, 0 to ±10VDC
Frequency setting power supply	Across 10 (positive) and 5		5.2VDC
	Across 10E (positive) and 5		10VDC
Frequency meter signal	Across CA (positive) and 5		About 20mA at maximum frequency
	Across AM (positive) and 5		Approximately 10DVC at maximum frequency (without frequency meter)
Start signal Select signal	Across STF, STR, RH, RM, RL, JOG, RT, AU, STOP, CS and SD (positive)		When open 20 to 30VDC ON voltage: 1V or less "SD" is common
Reset	Across RES and SD (positive)		
Output stop	Across MRS and SD (positive)		
Fault signal	Across A1 and C1 Across B1 and C1	Moving-coil type (such as tester)	Electric continuity check*3 <Normal> <Fault> Across A1 and C1 Discontinuity Continuity Across B1 and C1 Continuity Discontinuity

*1 Use an FFT to measure the output voltage accurately. A tester or general measuring instrument cannot measure accurately.
*2 When the carrier frequency exceeds 5kHz, do not use this instrument since using it may increase eddy-current losses produced in metal parts inside the instrument, leading to burnout. If the wiring length between the inverter and motor is long, the instrument and CT may generate heat due to line-to-line leakage current.
*3 When the setting of *Pr. 195 ABC1 terminal function selection* is positive logic
*4 A digital power meter (designed for inverter) can also be used to measure.

6.2.2 Measurement of powers

Use digital power meters (for inverter) for the both of inverter input and output side. Alternatively, measure using electrodynamic type single-phase wattmeters for the both of inverter input and output side in two-wattmeter or three-wattmeter method. As the current is liable to be imbalanced especially in the input side, it is recommended to use the three-wattmeter method.
Examples of measured value differences produced by different measuring meters are shown below.
An error will be produced by difference between measuring instruments, e.g. power calculation type and two- or three-wattmeter type three-phase wattmeter. When a CT is used in the current measuring side or when the meter contains a PT on the voltage measurement side, an error will also be produced due to the frequency characteristics of the CT and PT.

[Measurement conditions]
Constant-torque (100%) load, constant-power at 60Hz or more.
3.7kW(5HP), 4-pole motor, value indicated in 3-wattmeter method is 100%.

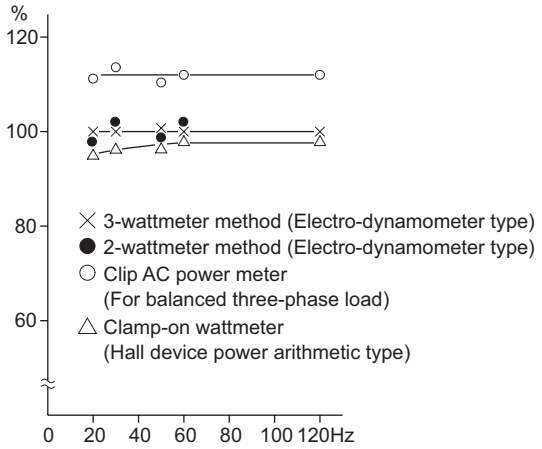

Example of measuring inverter input power

[Measurement conditions]
Constant-torque (100%) load, constant-power at 60Hz or more.
3.7kW(5HP), 4-pole motor, value indicated in 3-wattmeter method is 100%.

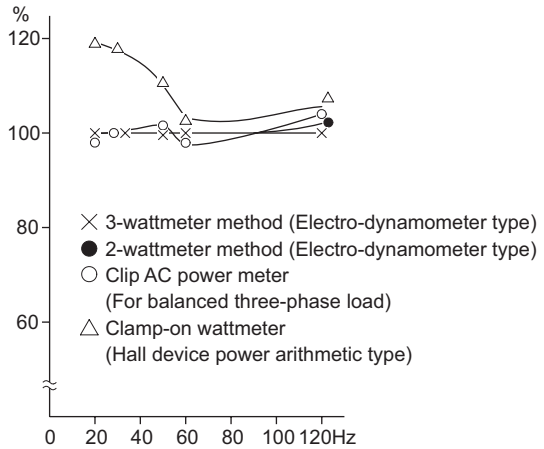

Example of measuring inverter output power

6.2.3 Measurement of voltages and use of PT

(1) Inverter input side

As the input side voltage has a sine wave and it is extremely small in distortion, accurate measurement can be made with an ordinary AC meter.

(2) Inverter output side

Since the output side voltage has a PWM-controlled rectangular wave, always use a rectifier type voltmeter. A needle type tester cannot be used to measure the output side voltage as it indicates a value much greater than the actual value. A moving-iron type meter indicates an effective value which includes harmonics and therefore the value is larger than that of the fundamental wave. The value monitored on the operation panel is the inverter controlled voltage itself. Hence, that value is accurate and it is recommended to monitor values (provide analog output) using the operation panel.

(3) PT

No PT can be used in the output side of the inverter. Use a direct-reading meter. (A PT can be used in the input side of the inverter.)

6.2.4 Measurement of currents

Use moving-iron type meters on both the input and output sides of the inverter. However, if the carrier frequency exceeds 5kHz, do not use that meter since an overcurrent losses produced in the internal metal parts of the meter will increase and the meter may burn out. In this case, use an approximate-effective value type.
As the inverter input side current is easily imbalanced, measurement of currents in all three phases is recommended. Correct values cannot be measured in one or two phases. On the other hand, the phase imbalanced ratio of the output side current must be within 10%.
When a clamp ammeter is used, always use an effective value detection type. A mean value detection type produces a large error and may indicate an extremely smaller value than the actual value. The value monitored on the operation panel is accurate if the output frequency varies, and it is recommended to monitor values (provide analog output) using the operation panel.
An example of the measured value difference produced by different measuring meters is shown below.

[Measurement conditions]
Value indicated by moving-iron type ammeter is 100%.

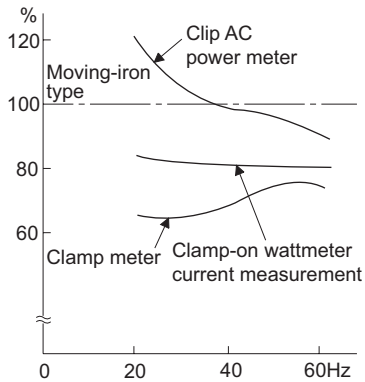

Example of measuring Inverter Input Current

[Measurement conditions]
Value indicated by moving-iron type ammeter is 100%.

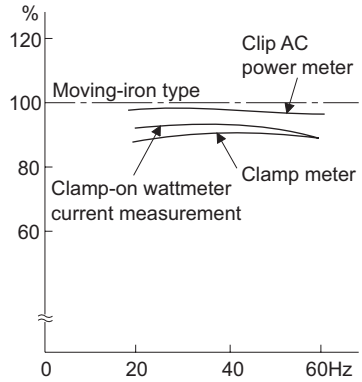

Example of measuring Inverter Output Current

6.2.5 Use of CT and transducer

A CT may be used in both the input and output sides of the inverter, but the one used should have the largest possible VA ability because an error will increase if the frequency gets lower.
When using a transducer, use the effective value calculation type which is immune to harmonics.

6.2.6 Measurement of inverter input power factor

Use the effective power and apparent power to calculate the inverter input power factor. A power-factor meter cannot indicate an exact value.

$$\text{Total power factor of the inverter} = \frac{\text{Effective power}}{\text{Apparent power}} = \frac{\text{Three-phase input power found by 3-wattmeter method}}{\sqrt{3} \times \text{V (power supply voltage)} \times \text{I (input current effective value)}}$$

6.2.7 Measurement of converter output voltage (across terminals P/+ and N/-)

The output voltage of the converter is developed across terminals P/+ and N/- and can be measured with a moving-coil type meter (tester). Although the voltage varies according to the power supply voltage, approximately 270V to 300V (approximately 540V to 600V for the 400V class) is output when no load is connected and voltage decreases when a load is connected.
When regenerative energy is returned from the motor during deceleration, for example, the converter output voltage rises to nearly 400V to 450V (800V to 900V for the 400V class) maximum.

6.2.8 Insulation resistance test using megger

For the inverter, conduct the insulation resistance test on the main circuit only as shown below and do not perform the test on the control circuit. (Use a 500VDC megger.)

CAUTION

- Before performing the insulation resistance test on the external circuit, disconnect the cables from all terminals of the inverter so that the test voltage is not applied to the inverter.
- For the electric continuity test of the control circuit, use a tester (high resistance range) and do not use the megger or buzzer.

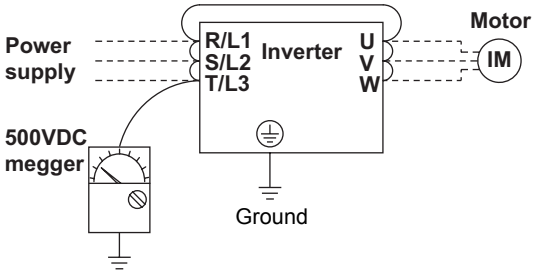

6.2.9 Pressure test

Do not conduct a pressure test. Deterioration may occur.

MEMO

7 SPECIFICATIONS

This chapter provides the "SPECIFICATIONS" of this product.
Always read the instructions before using the equipment.

7.1 Rating 370
7.2 Common specifications 372
7.3 Outline dimension drawings 374
7.4 Heatsink protrusion attachment procedure..... 384

7.1 Rating

•200V class

SLD is initially set.

Type FR-F720-□□□□□-NA			00046	00077	00105	00167	00250	00340	00490	00630	00770	00930	01250	01540	01870	02330	03160	03800	04750
Applied motor capacity (kW(HP))*1		LD	0.75	1.5	2.2	3.7	5.5	7.5	11	15	18.5	22	30	37	45	55	75	90	110
		SLD	(1)	(2)	(3)	(5)	(7.5)	(10)	(15)	(20)	(25)	(30)	(40)	(50)	(60)	(75)	(100)	(125)	(150)
Output	Rated capacity (kVA)*2	LD / SLD	1.6	2.7	3.7	5.8	8.8	11.8	17.1	22.1	27	32	43	53	65	81	110	132	165
	Rated current (A)*3	LD	4.2	7	9.6	15.2	23	31	45	58	70	85	114	140	170	212	288	346	432
			(3.6)	(6.0)	(8.2)	(12.9)	(20)	(26)	(38)	(49)	(60)	(72)	(97)	(119)	(145)	(180)	(244)	(294)	(367)
		SLD	4.6	7.7	10.5	16.7	25	34	49	63	77	93	125	154	187	233	316	380	475
			(3.9)	(6.5)	(8.9)	(14.2)	(21)	(29)	(42)	(54)	(65)	(79)	(106)	(131)	(159)	(198)	(268)	(323)	(403)
	Overload current rating*4	LD	120% 60s, 150% 3s, 50°C (122°F) (inverse time characteristics)																
		SLD	110% 60s, 120% 3s, 40°C (104°F) (inverse time characteristics)																
	Rated voltage*5		Three-phase 200 to 240V																
Power supply	Rated input AC voltage/frequency		Three-phase 200 to 220V 50Hz, 200 to 240V 60Hz																
	Permissible AC voltage fluctuation		170 to 242V 50Hz, 170 to 264V 60Hz																
	Permissible frequency fluctuation		±5%																
	Power supply system capacity (kVA)*6	Without DC reactor	2.1	4.0	4.8	8.0	11.5	16	20	27	32	41	52	65	79	99	-	-	-
		With DC reactor	1.2	2.6	3.3	5.0	8.1	10	16	19	24	31	41	50	61	74	110	132	165
Protective structure (JEM 1030)*8			Enclosed type (IP20 UL Type 1 Plenum Rated)*7										Open type (IP00)						
Cooling system			Self-cooling	Forced air cooling															
Approx. mass (kg (lbs))			1.9	2.3	3.6	3.6	3.6	6.6	6.6	7.9	13	13	14	23	35	35	67	70	70
			(4.1)	(5.0)	(7.9)	(7.9)	(7.9)	(14.5)	(14.5)	(17.4)	(28.6)	(28.6)	(30.8)	(50.6)	(77)	(77)	(147.4)	(154)	(154)

*1 The applicable motor capacity indicated is the maximum capacity applicable for use of the Mitsubishi 4-pole standard motor.
*2 The rated output capacity indicated assumes that the output voltage is 220V.
*3 When operating the inverter with the carrier frequency set to 3kHz or more, the carrier frequency automatically decreases if the inverter output current exceeds the value in parenthesis of the rated current. This may cause the motor noise to increase.
*4 The % value of the overload current rating indicated is the ratio of the overload current to the inverter's rated output current. For repeated duty, allow time for the inverter and motor to return to or below the temperatures under 100% load.
*5 The maximum output voltage does not exceed the power supply voltage. The maximum output voltage can be changed within the setting range. However, the pulse voltage value of the inverter output side voltage remains unchanged at about $\sqrt{2}$ that of the power supply.
*6 The power supply capacity varies with the value of the power supply side inverter impedance (including those of the input reactor and cables).
*7 When the hook of the inverter front cover is cut off for installation of the plug-in option, the inverter changes to an open type (the structure is no longer NEMA1).
*8 FR-DU07: IP40 (except for the PU connector)

•400V class

SLD is initially set.

Type FR-F740-□□□□□-NA			00023	00038	00052	00083	00126	00170	00250	00310	00380	00470	00620	00770	00930	01160
Applied motor capacity (kW(HP))*1		LD	0.75 (1)	1.5 (2)	2.2 (3)	3.7 (5)	5.5 (7.5)	7.5 (10)	11 (15)	15 (20)	18.5 (25)	22 (30)	30 (40)	37 (50)	45 (60)	55 (75)
		SLD														
Output	Rated capacity (kVA)*2	LD	1.6	2.7	3.7	5.8	8.8	12.2	17.5	22.1	26.7	32.8	43.4	53.3	64.8	80.8
		SLD														
	Rated current (A)*3	LD	2.1 (1.8)	3.5 (3.0)	4.8 (4.1)	7.6 (6.5)	11.5 (9.8)	16 (13.6)	23 (20)	29 (25)	35 (30)	43 (37)	57 (48)	70 (60)	85 (72)	106 (90)
		SLD	2.3 (2.0)	3.8 (3.2)	5.2 (4.4)	8.3 (7.1)	12.6 (10.7)	17 (14.5)	25 (21)	31 (26)	38 (32)	47 (40)	62 (53)	77 (65)	93 (79)	116 (99)
	Overload current rating*4	LD	120% 60s, 150% 3s, 50°C (122°F) (inverse-time characteristics)													
		SLD	110% 60s, 120% 3s, 40°C (104°F) (inverse-time characteristics)													
	Rated voltage*5		Three-phase 380 to 480V													
Power supply	Rated input AC voltage/frequency		Three-phase 380 to 480V 50Hz/60Hz													
	Permissible AC voltage fluctuation		323 to 528V 50Hz/60Hz													
	Permissible frequency fluctuation		±5%													
	Power supply system capacity (kVA)*6	Without DC reactor	2.1	4.0	4.8	8.0	11.5	16	20	27	32	41	52	65	79	99
		With DC reactor	1.2	2.6	3.3	5.0	8.1	10	16	19	24	31	41	50	61	74
Protective structure (JEM 1030)*8			Enclosed type (IP20 UL Type 1 Plenum Rated)*7											Open type (IP00)		
Cooling system			Self-cooling			Forced air cooling										
Approx. mass (kg (lbs))			3.6 (7.9)	3.6 (7.9)	3.6 (7.9)	3.6 (7.9)	3.6 (7.9)	6.6 (14.5)	6.6 (14.5)	7.6 (16.7)	7.6 (16.7)	13 (28.7)	13 (28.7)	23 (50.7)	35 (77.2)	35 (77.2)

Type FR-F740-□□□□□-NA			01800	02160	02600	03250	03610	04320	04810	05470	06100	06830	07700	08660	09620	10940	12120
Applied motor capacity (kW(HP))*1		LD	75 (100)	90 (150)	110 (150)	132 (200)	160 (250)	185 (300)	220 (350)	250 (400)	280 (450)	315 (500)	355 (550)	400 (600)	450 (700)	500 (750)	560 (800)
		SLD	90 (150)	110 (150)	132 (200)	160 (250)	185 (300)	220 (350)	250 (400)	280 (450)	315 (500)	355 (550)	400 (600)	450 (700)	500 (750)	560 (800)	630 (850)
Output	Rated capacity (kVA)*2	LD	110	137	165	198	247	275	329	366	416	464	520	586	659	733	833
		SLD	137	165	198	247	275	329	366	416	464	520	586	659	733	833	923
	Rated current (A)*3	LD	144 (122)	180 (153)	216 (184)	260 (221)	325 (276)	361 (306)	432 (367)	481 (408)	547 (464)	610 (518)	683 (580)	770 (654)	866 (736)	962 (817)	1094 (929)
		SLD	180 (153)	216 (184)	260 (221)	325 (276)	361 (306)	432 (367)	481 (408)	547 (464)	610 (518)	683 (580)	770 (654)	866 (736)	962 (817)	1094 (929)	1212 (1030)
	Overload current rating*4	LD	120% 60s, 150% 3s, 50°C (122°F) (inverse-time characteristics)														
		SLD	110% 60s, 120% 3s, 40°C (104°F) (inverse-time characteristics)														
	Voltage*5		Three-phase 380 to 480V														
Power supply	Rated input AC voltage/frequency		Three-phase 380 to 480V 50Hz/60Hz														
	Permissible AC voltage fluctuation		323 to 528V 50Hz/60Hz														
	Permissible frequency fluctuation		±5%														
	Power supply system capacity (kVA)*6	Without DC reactor	-	-	-	-	-	-	-	-	-	-	-	-	-	-	-
		With DC reactor LD	110	137	165	198	247	275	329	366	416	464	520	586	659	733	833
		With DC reactor SLD	137	165	198	247	275	329	366	416	464	520	586	659	733	833	923
Protective structure (JEM 1030(NEMA250-1997))*8			Open type (IP00)														
Cooling system			Forced air cooling														
Approx. mass (kg (lbs))			37 (81.6)	50 (110.2)	57 (125.4)	72 (158.4)	72 (158.4)	110 (242)	110 (242)	175 (385)	175 (385)	175 (385)	260 (572)	260 (572)	370 (814)	370 (814)	370 (814)

*1 The applicable motor capacity indicated is the maximum capacity applicable for use of the Mitsubishi 4-pole standard motor.
*2 The rated output capacity indicated assumes that the output voltage is 440V.
*3 When operating the inverter with the carrier frequency set to 3kHz or more, the carrier frequency automatically decreases if the inverter output current exceeds the value in parenthesis of the rated current. This may cause the motor noise to increase.
*4 The % value of the overload current rating indicated is the ratio of the overload current to the inverter's rated output current. For repeated duty, allow time for the inverter and motor to return to or below the temperatures under 100% load.
*5 The maximum output voltage does not exceed the power supply voltage. The maximum output voltage can be changed within the setting range. However, the pulse voltage value of the inverter output side voltage remains unchanged at about $\sqrt{2}$ that of the power supply.
*6 The power supply capacity varies with the value of the power supply side inverter impedance (including those of the input reactor and cables).
*7 When the hook of the inverter front cover is cut off for installation of the plug-in option, protective structure of the inverter changes to an open type (the structure is no longer NEMA1).
*8 FR-DU07: IP40 (except for the PU connector)

7.2 Common specifications

Control specifications	Control method		High carrier frequency PWM control (V/F control)/Optimum excitation control/Simple magnetic flux vector control
	Output frequency range		0.5 to 400Hz
	Frequency setting resolution	Analog input	0.015Hz/60Hz (terminal 2, 4: 0 to 10V/12bit) 0.03Hz/60Hz (terminal 2, 4: 0 to 5V/11bit, 0 to 20mA/11bit, terminal 1: 0 to ±10V/12bit) 0.06Hz/60Hz (terminal 1: 0 to ±5V/11bit)
		Digital input	0.01Hz
	Frequency accuracy	Analog input	Within ±0.2% of the max. output frequency (25°C ± 10°C (77°F ± 50°F))
		Digital input	Within 0.01% of the set output frequency
	Speed control range		1:10 under V/F control, 1:15 under Simple magnetic flux vector control
	Voltage/frequency characteristics		0 to 400Hz of the base frequency can be set from constant-torque/adjustable 5 points V/F can be selected.
	Starting torque		120% (at 3Hz) when Simple magnetic flux vector control and slip compensation are set
	Acceleration/deceleration time setting		0 to 3600s (acceleration and deceleration can be set individually), linear or S-pattern acceleration/deceleration modes are available.
	DC injection brake		Operation frequency (0 to 120Hz), operation time (0 to 10s), operation voltage (0 to 30%) can be changed
	Stall prevention operation level		Operation current level can be set (0 to 150% variable), whether to use the function or not can be set.
Operation specifications	Frequency setting signal	Analog input	Terminal 2, 4: 0 to 10V, 0 to 5V, 4 to 20mA are available. Terminal 1: -10 to +10V, -5 to 5V are available.
		Digital input	Four-digit BCD or16-bit binary using the setting dial of the operation panel or parameter unit (when used with the option FR-A7AX)
	Start signal		Forward and reverse rotation or start signal automatic self-holding input (3-wire input) can be selected.
	Input signals (twelve terminals)		The following signals can be assigned to *Pr. 178 to Pr.189 (input terminal function selection)*: multi speed selection, second function selection, terminal 4 input selection, JOG operation selection, selection of automatic restart after instantaneous power failure, external thermal relay input, HC connection (inverter operation enable signal), HC connection (instantaneous power failure detection), PU operation/external interlock signal, External DC injection brake operation start, PID control enable terminal, PU operation, external operation switchover, output stop, start self-holding selection, forward rotation command, reverse rotation command, inverter reset, PTC thermistor input, PID forward reverse operation switchover, PU-NET operation switchover, External-NET operation switchover, command source switchover, DC feeding operation permission, DC feeding cancel, and PID integral value reset, Pre-charge end command, Second pre-charge end command, Fault clear signal, Sequence start
	Operational functions		Maximum and minimum frequency settings, frequency jump operation, external thermal relay input selection, polarity reversible operation, automatic restart after instantaneous power failure operation, original operation continuation at an instantaneous power failure, electronic bypass operation, forward/reverse rotation prevention, operation mode selection, external DC injection braking start, PID control, computer link operation (RS-485).
	Output signal Open collector output (five terminals) Relay output (two terminals)	Operating status	The following signals can be assigned to *Pr.190 to Pr.196 (output terminal function selection)*: inverter running, up-to-speed, instantaneous power failure /undervoltage, overload warning, output frequency detection, second output frequency detection, regenerative brake prealarm*4, electronic thermal relay function pre-alarm, PU operation mode, inverter operation ready, output current detection, zero current detection, PID lower limit, PID upper limit, PID forward rotation reverse rotation output, bypass operation-inverter switchover MC1 to MC3, commercial power supply side motor 1 to 4 connection, inverter side motor 1 to 4 connection, fan alarm output, heatsink overheat pre-alarm, inverter running start command on, deceleration at an instantaneous power failure, PID control activated, PID deviation limit, during retry, During power failure, During PID output suspension, During pre-charge operation, During second pre-charge operation, Pre-charge time over, Second pre-charge time over, Pre-charge level over, Second pre-charge level over, pulse train output of output power, DC current feeding, life alarm, fault output 3 (power-off signal), power savings average value update timing, current average monitor, fault output 2, maintenance timer alarm, remote output, alarm output, and fault output.
		When used with the FR-A7AY, FR-A7AR (option)	In addition to above, the following signal can be assigned to *Pr.313 to Pr. 319 (extension output terminal function selection)*: control circuit capacitor life, main circuit capacitor life, cooling fan life and inrush current limit circuit fault. (Only positive logic can be set for extension terminals of the FR-A7AR.)
	For meter Analog output (Max. 10VDC: one terminal) (Max. 20mADC: one terminal)		The following signals can be assigned to *Pr.54 CA terminal function selection* and *Pr. 158 AM terminal function selection*: output frequency, motor current (steady or peak value), output voltage, frequency setting value, running speed, converter output voltage (steady or peak value), electronic thermal relay function load factor, input power, output power, load meter, reference voltage output, motor load factor, power saving effect, regenerative brake duty*4, PID set value, and PID measured value.

Indication	Operation panel (FR-DU07) Parameter unit (FR-PU07)	Operating status	The following operating status can be displayed: output frequency, motor current (steady or peak value), output voltage, alarm indication, frequency setting, running speed, converter output voltage (steady or peak value), electronic thermal relay function load factor, input power, output power, load meter, cumulative energization time, actual operation time, motor load factor, cumulative power, power saving effect, cumulative saving power, regenerative brake duty*4,PID set point, PID measured value, PID deviation value, inverter I/O terminal monitor, input terminal option monitor*1, output terminal option monitor*1, option fitting status monitor*2, terminal assignment status*2
		Fault definition	Fault definition is displayed when a fault occurs. Past 8 fault definitions (output voltage/current/ frequency/cumulative energization time right before the fault occurs) are stored.
		Interactive guidance	Function (help) for operation guide *2
Protective/ warning function		Protective function	Overcurrent during acceleration, overcurrent during constant speed, overcurrent during deceleration, overvoltage during acceleration, overvoltage during constant speed, overvoltage during deceleration, inverter protection thermal operation, motor protection thermal operation, heatsink overheat, instantaneous power failure occurrence, undervoltage, input phase loss *6, motor overload, output side earth (ground) fault overcurrent, output phase loss, external thermal relay operation *6, PTC thermistor operation *6, option fault, parameter error, PU disconnection, retry count excess *6, CPU fault, operation panel power supply short circuit, 24VDC power output short circuit, output current detection value excess *6, inrush current limit circuit fault, communication fault (inverter), analog input fault, PID signal fault *6, internal circuit fault (15V power supply), brake transistor alarm detection *4, Pre-charge fault *6, 4mA input fault *6
		Warning function	Fan alarm, overcurrent stall prevention, overvoltage stall prevention, regenerative brake prealarm *6, electronic thermal relay function prealarm, PU stop, maintenance timer alarm *1*6, parameter write error, copy operation error, operation panel lock, parameter copy, password locked
Environment	Surrounding air temperature	LD	-10°C to +50°C (14°F to 122°F) (non-freezing)
		SLD (initial setting)	-10°C to +40°C (14°F to 104°F) (non-freezing)
	Ambient humidity		90%RH or less (non-condensing)
	Storage temperature*3		-20°C to +65°C (-4°F to +149°F)
	Atmosphere		Indoors (without corrosive gas, flammable gas, oil mist, dust and dirt etc.)
	Altitude, vibration		Maximum 1000m (3280.80 feet) above sea level for standard operation. After that derate by 3% for every extra 500m (1640.40 feet) up to 2500m (8202.10 feet) (91%). 5.9m/s^2 or less *5 at 10 to 55Hz (directions of X, Y, Z axes)

*1 Can be displayed only on the operation panel (FR-DU07).
*2 This operation guide is only available with option parameter unit (FR-PU07).
*3 Temperature applicable for a short period in transit, etc.
*4 Only the FR-F720-03160 (FR-F740-01800) or more functions.
*5 2.9m/s^2 or less for the FR-F740-04320 or more.
*6 This protective function does not function in the initial status.

7.3 Outline dimension drawings

- **FR-F720-00046 and 00077-NA**

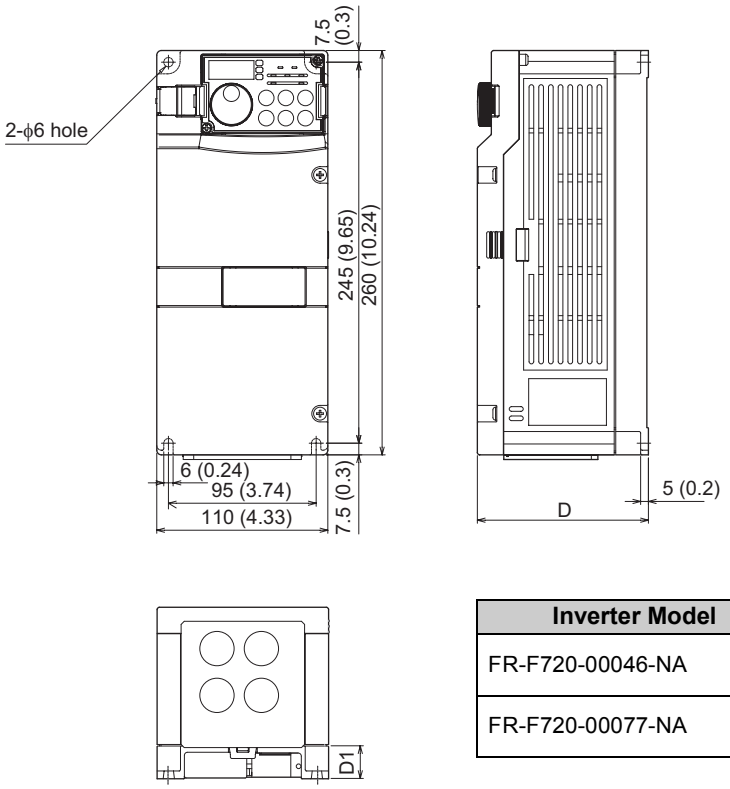

Inverter Model	D	D1
FR-F720-00046-NA	110 (4.33)	21 (0.83)
FR-F720-00077-NA	125 (4.92)	36 (1.42)

(Unit: mm (inches))

- **FR-F720-00105, 00167, 00250-NA**
- **FR-F740-00023, 00038, 00052, 00083, 00126-NA**

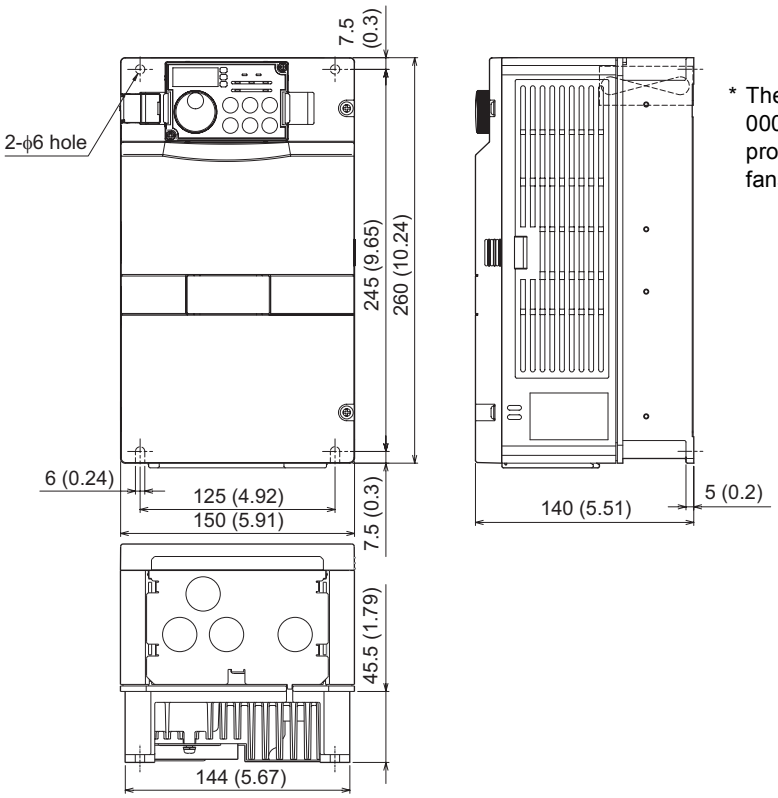

* The FR-F740-00023 to 00052-NA are not provided with cooling fans.

(Unit: mm (inches))

- **FR-F720-00340, 00490, 00630-NA**
- **FR-F740-00170, 00250, 00310, 00380-NA**

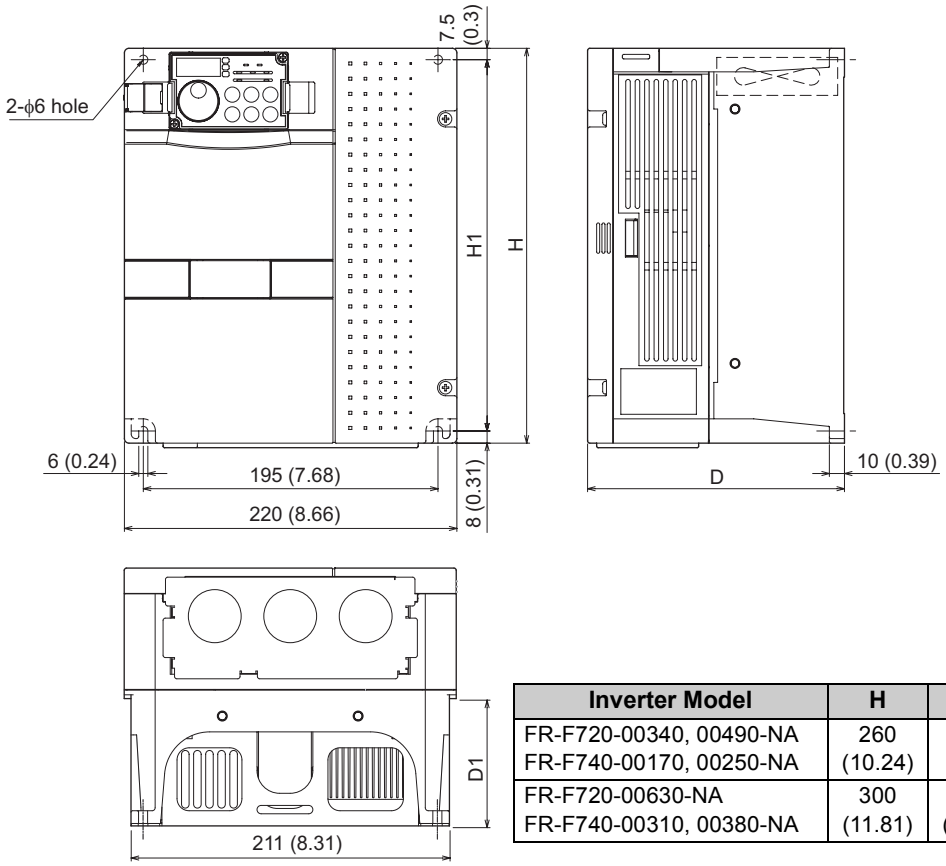

Inverter Model	H	H1	D	D1
FR-F720-00340, 00490-NA FR-F740-00170, 00250-NA	260 (10.24)	245 (9.65)	170 (6.69)	84 (3.31)
FR-F720-00630-NA FR-F740-00310, 00380-NA	300 (11.81)	285 (11.22)	190 (7.48)	101.5 (4)

(Unit: mm (inches))

- **FR-F720-00770, 00930, 01250-NA**
- **FR-F740-00470, 00620-NA**

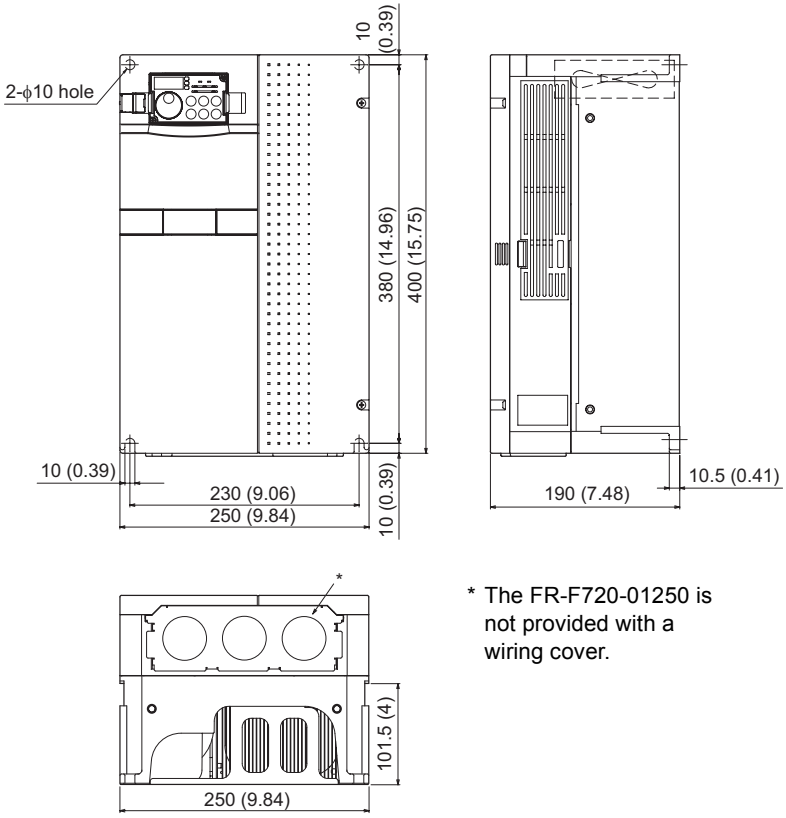

* The FR-F720-01250 is not provided with a wiring cover.

(Unit: mm (inches))

- **FR-F720-01540, 01870, 02330-NA**
- **FR-F740-00770, 00930, 01160-NA**

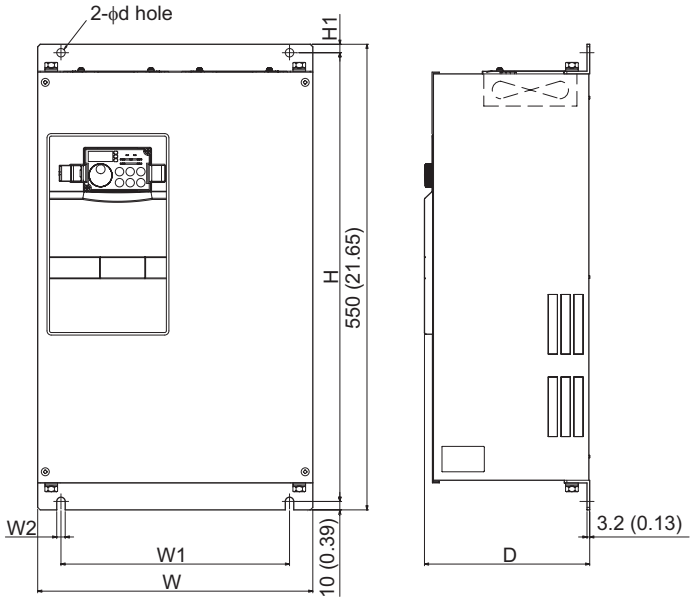

Inverter Model	W	W1	W2	H1	H2	d	D
FR-F720-01540-NA FR-F740-00770-NA	325 (12.8)	270 (10.63)	10 (0.39)	530 (20.87)	10 (0.39)	10 (0.39)	195 (7.68)
FR-F720-01870, 02330-NA FR-F740-00930, 01160-NA	435 (17.13)	380 (14.96)	12 (0.47)	525 (20.67)	15 (0.59)	12 (0.47)	250 (9.84)

(Unit: mm (inches))

- **FR-F740-01800-NA**

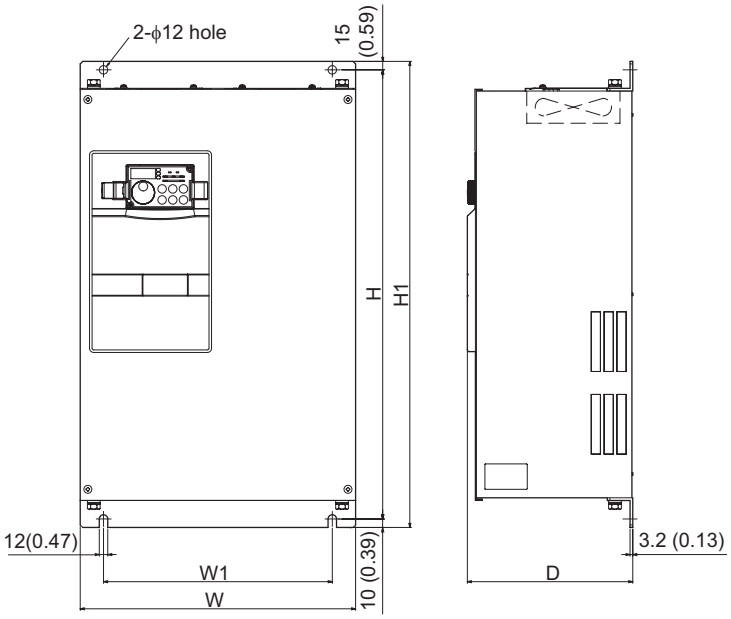

Inverter Model	W	W1	H	H1	D
FR-F740-01800-NA	435 (17.13)	380 (14.96)	525 (20.67)	550 (21.65)	250 (9.84)

- **DC reactor supplied**

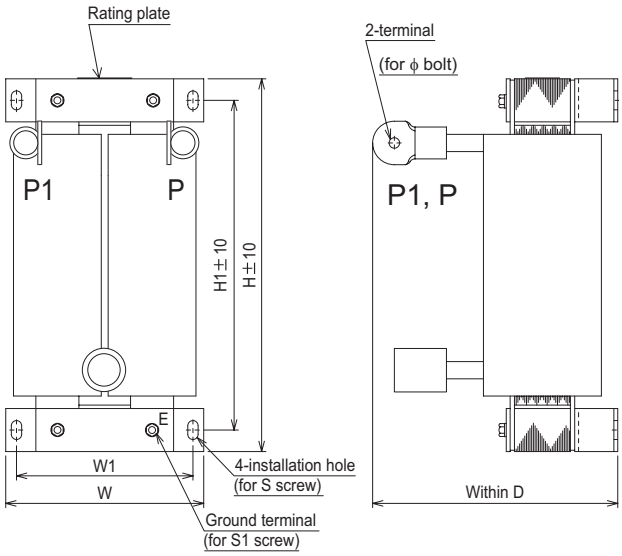

DC reactor Model	W	W1	H	H1	D	Mass (kg(lbs))
FR-HEL-H90K (FR-F740-01800-NA)	150 (5.91)	130 (5.12)	340 (13.39)	310 (12.20)	190 (7.48)	20 (44)

(Unit: mm (inches))

- **FR-F720-03160, 03800, 04750-NA**
- **FR-F740-02160, 02600, 03250, 03610-NA**

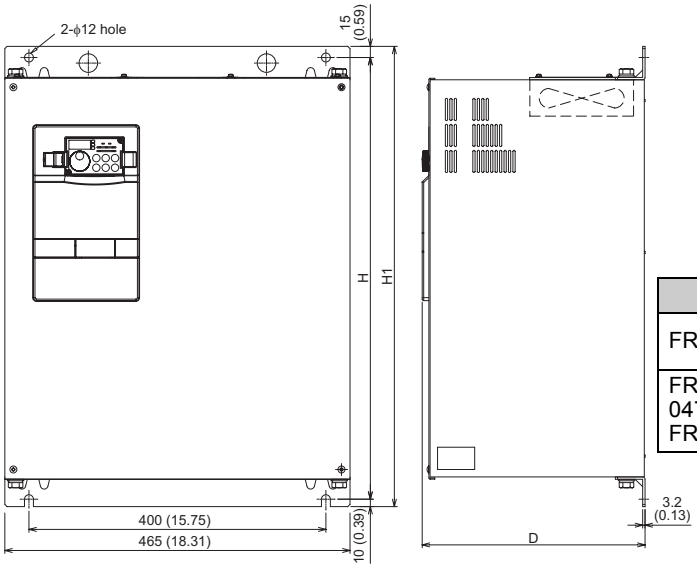

Inverter Model	H	H1	D
FR-F740-02160, 02600-NA	595 (23.43)	620 (24.41)	300 (11.81)
FR-F720-03160, 03800, 04750-NA FR-F740-03250, 03610-NA	715 (28.15)	740 (29.13)	360 (14.17)

- **DC reactor supplied**

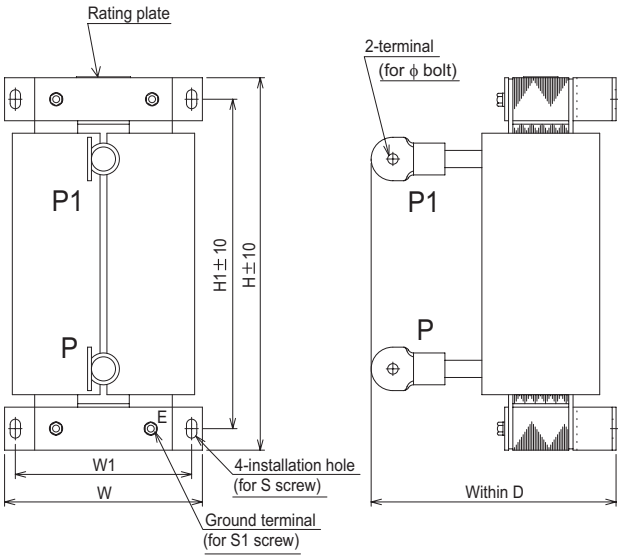

DC reactor Model	W	W1	H	H1	D	S	S1	Mass (kg(lbs))
FR-HEL-75K(FR-F720-03160-NA)	150 (5.91)	130 (5.19)	340 (13.39)	310 (12.2)	190 (7.48)	M6	M6	17 (37.4)
FR-HEL-90K(FR-F720-03800-NA)	150 (5.91)	130 (5.19)	340 (13.39)	310 (12.2)	200 (7.87)	M6	M6	19 (41.8)
FR-HEL-110K(FR-F720-04750-NA)	175 (6.89)	150 (5.91)	400 (15.74)	365 (14.37)	200 (7.87)	M8	M6	20 (44)
FR-HEL-H110K(FR-F740-02160-NA)	150 (5.91)	130 (5.19)	340 (13.39)	310 (12.2)	195 (7.68)	M6	M6	22 (48.4)
FR-HEL-H132K(FR-F740-02600-NA)	175 (6.89)	150 (5.91)	405 (15.94)	370 (14.57)	200 (7.87)	M8	M6	26 (57.2)
FR-HEL-H160K(FR-F740-03250-NA)	175 (6.89)	150 (5.91)	405 (15.94)	370 (14.57)	205 (8.07)	M8	M6	28 (61.6)
FR-HEL-H185K(FR-F740-03610-NA)	175 (6.89)	150 (5.91)	405 (15.94)	370 (14.57)	240 (9.44)	M8	M6	29 (63.8)

(Unit: mm (inches))

- **FR-F740-04320, 04810-NA**

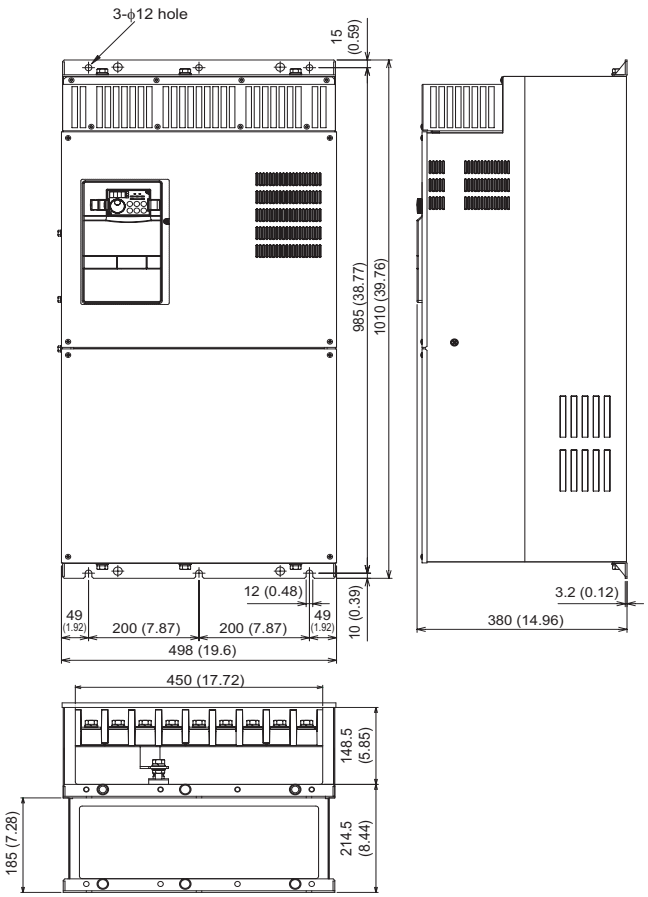

- **DC reactor supplied**

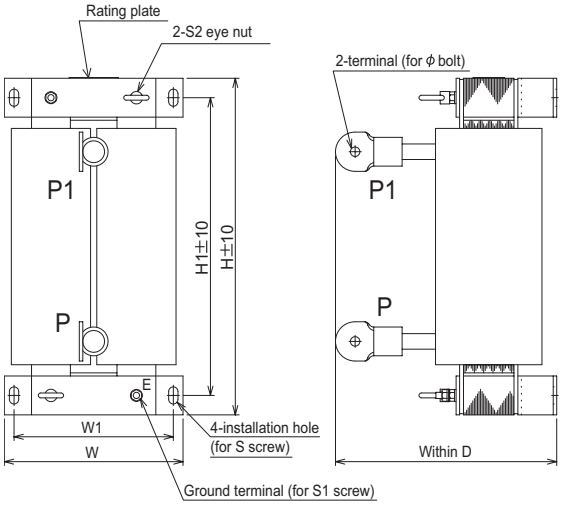

* Remove the eye nut after installation of the product.

DC reactor Model	W	W1	H	H1	D	S	S1	S2	φ	Mass (kg(lbs))
FR-HEL-H220K (FR-F740-04320-NA)	175 (6.88)	150 (5.9)	405 (15.94)	370 (14.56)	240 (9.44)	M8	M6	M6	M12	30 (66)
FR-HEL-H250K (FR-F740-04810-NA)	190 (7.48)	165 (6.49)	440 (17.32)	400 (15.74)	250 (9.84)	M8	M8	M8	M12	35 (77)

(Unit: mm (inches))

• FR-F740-05470, 06100, 06830-NA

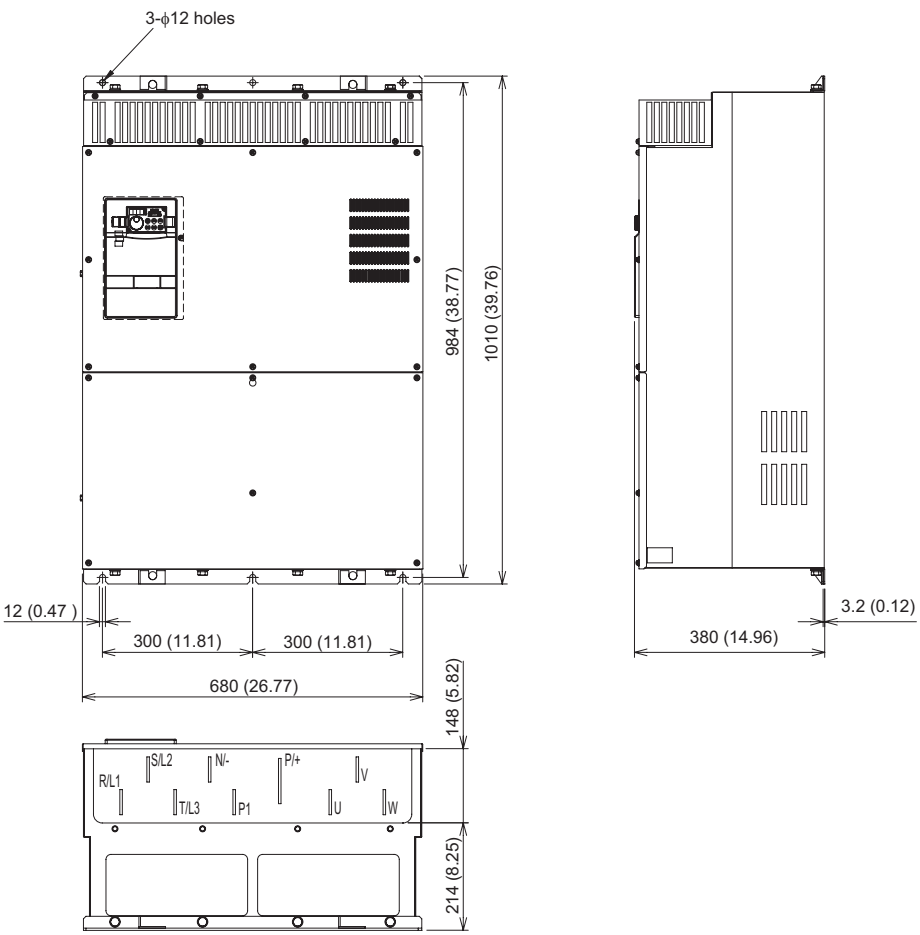

• DC reactor supplied

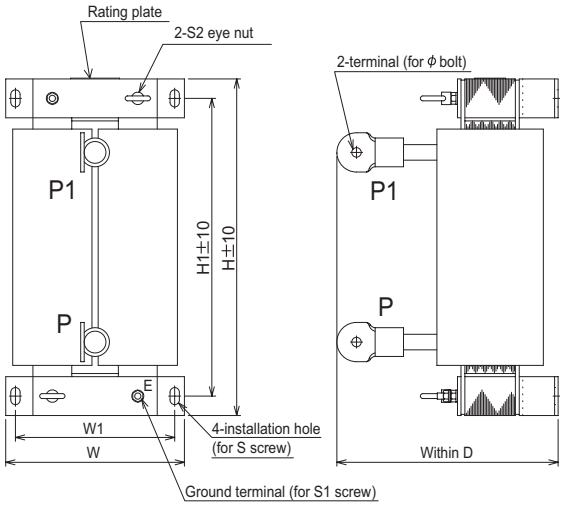

* Remove the eye nut after installation of the product.

DC reactor Model	W	W1	H	H1	D	S	S1	S2	ϕ	Mass (kg(lbs))
FR-HEL-H280K (FR-F740-05470-NA)	190 (7.48)	165 (6.49)	440 (17.32)	400 (15.74)	255 (10.03)	M8	M8	M8	M16	38 (83.6)
FR-HEL-H315K (FR-F740-06100-NA)	210 (8.26)	185 (7.28)	495 (19.48)	450 (17.71)	250 (9.84)	M10	M8	M8	M16	42 (92.4)
FR-HEL-H355K (FR-F740-06830-NA)	210 (8.26)	185 (7.28)	495 (19.48)	450 (17.71)	250 (9.84)	M10	M8	M8	M16	46 (101.2)

(Unit: mm (inches))

- **FR-F740-07700, 08660-NA**

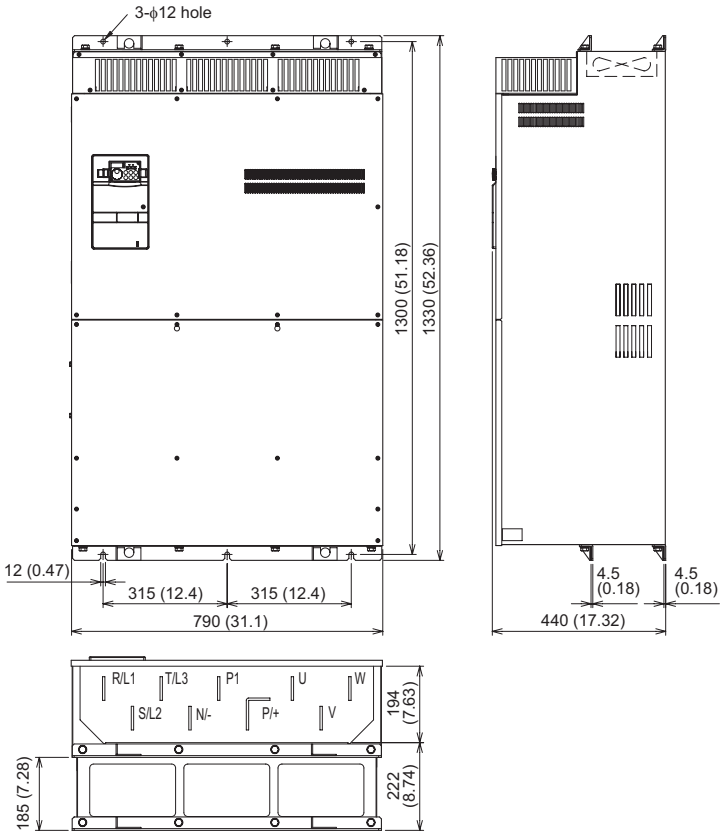

- **DC reactor supplied**

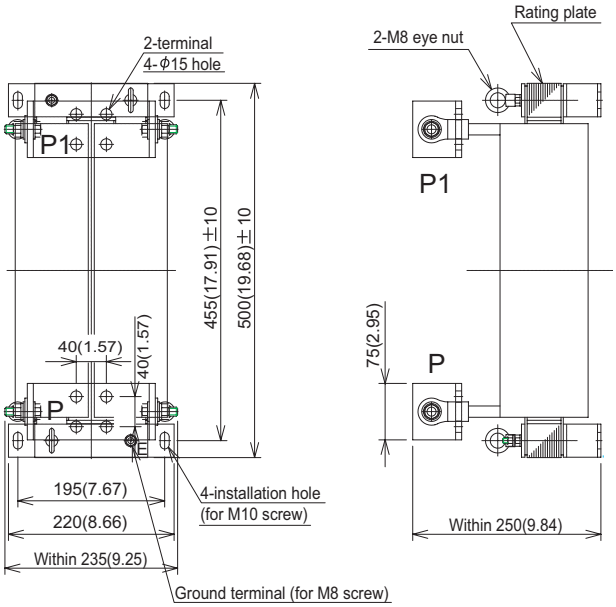

* Remove the eye nut after installation of the product.

DC reactor Model	Mass (kg(lbs))
FR-HEL-H400K (FR-F740-07700-NA)	50 (110)
FR-HEL-H450K (FR-F740-08660-NA)	57 (125.4)

(Unit: mm (inches))

- **FR-F740-09620, 10940, 12120-NA**

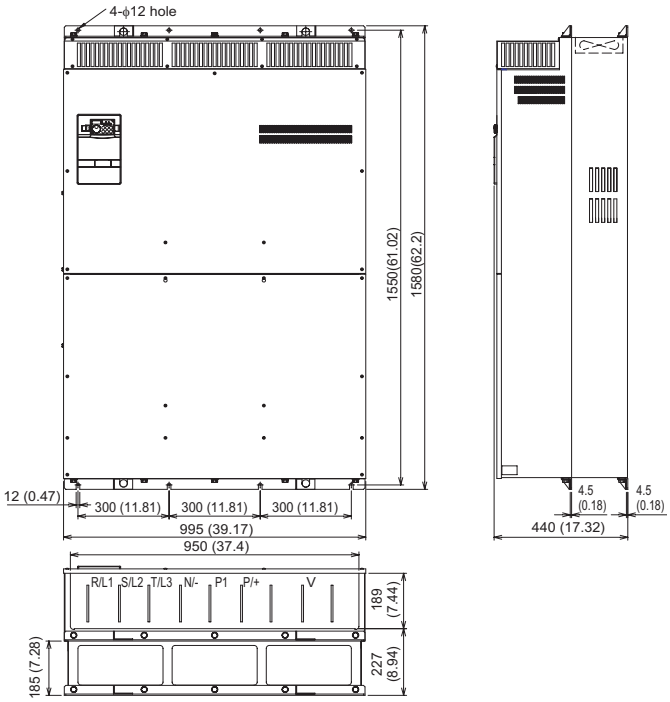

- **DC reactor supplied**

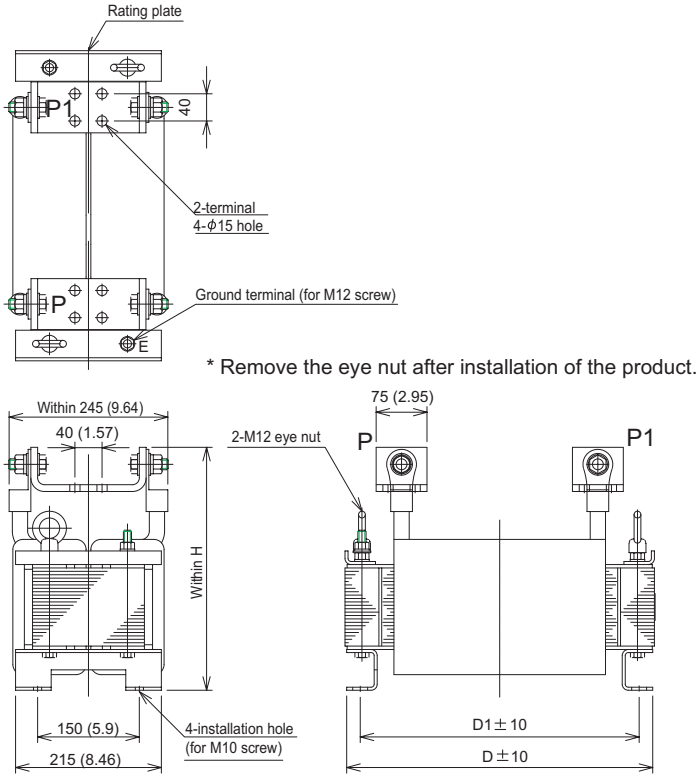

DC reactor Model	H	D	D1	Mass (kg(lbs))
FR-HEL-H500K (FR-F740-09620-NA)	345 (13.5)	455 (17.91)	405 (15.94)	67 (147.4)
FR-HEL-H560K (FR-F740-10940-NA)	360 (14.17)	460 (18.11)	410 (16.14)	85 (187)
FR-HEL-H630K (FR-F740-12120-NA)	360 (14.17)	460 (18.11)	410 (16.14)	95 (209)

(Unit: mm (inches))

- **Operation panel (FR-DU07)**

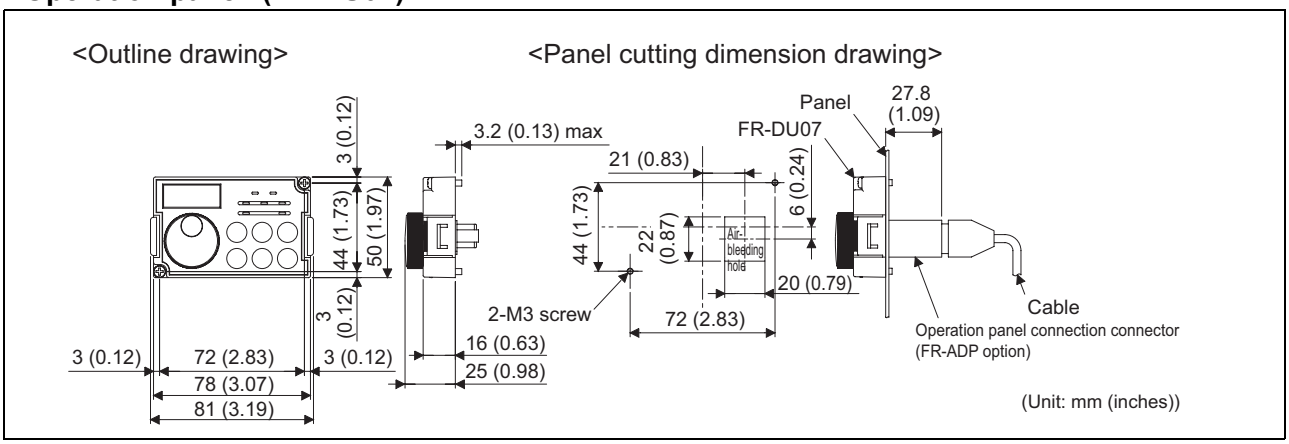

- **Parameter unit (option) (FR-PU07)**

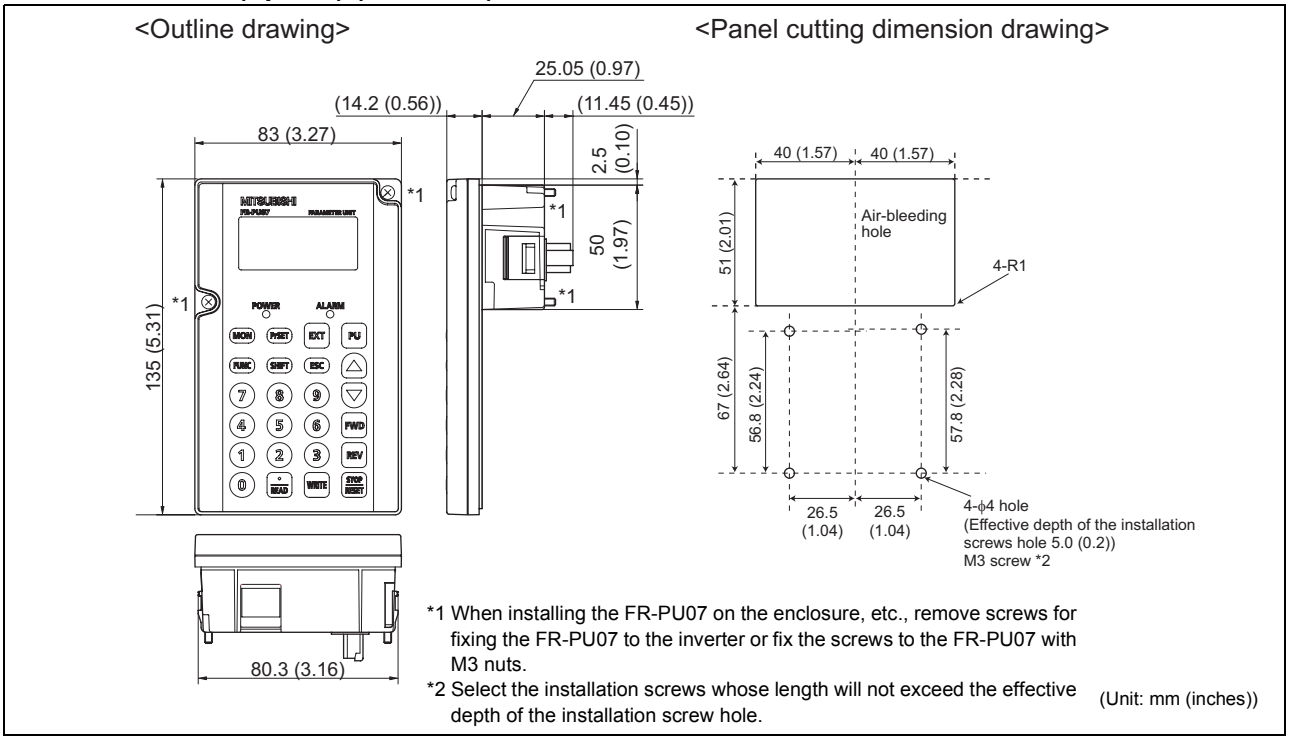

7.4 Heatsink protrusion attachment procedure

When encasing the inverter in an enclosure, the generated heat amount in an enclosure can be greatly reduced by installing the heatsink portion of the inverter outside the enclosure. When installing the inverter in a compact enclosure, etc., this installation method is recommended.

7.4.1 When using a heatsink protrusion attachment (FR-A7CN)

For the FR-F720-00105 to 04750, FR-F740-00023 to 03610, a heatsink can be protruded outside the enclosure using a heatsink protrusion attachment (FR-A7CN). (Attachment is not required when protruding the heatsink for FR-F740-04320 or larger inverter.) For a panel cut dimension drawing and an installation procedure of the heatsink protrusion attachment (FR-A7CN) to the inverter, refer to a manual of "heatsink protrusion attachment (FR-A7CN01 to 11)".

7.4.2 Protrusion of heatsink of the FR-F740-04320 or more

(1) Panel cutting

Cut the panel of the enclosure according to the inverter capacity.

• FR-F740-04320, 04810

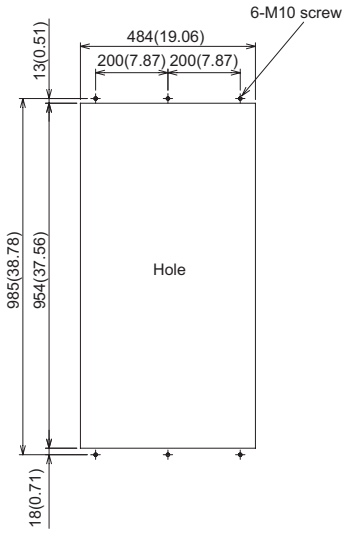

(Unit: mm (inches))

• FR-F740-05470, 06100, 06830

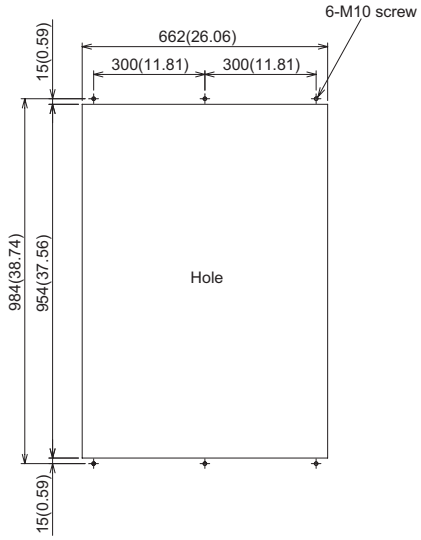

(Unit: mm (inches))

• FR-F740-07700, 08660

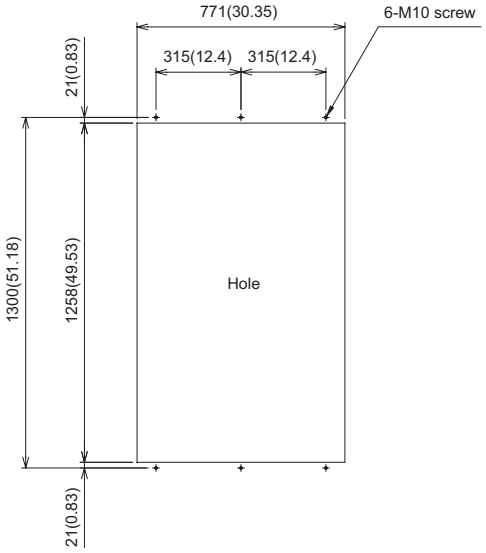

(Unit: mm (inches))

• FR-F740-09620, 10940, 12120

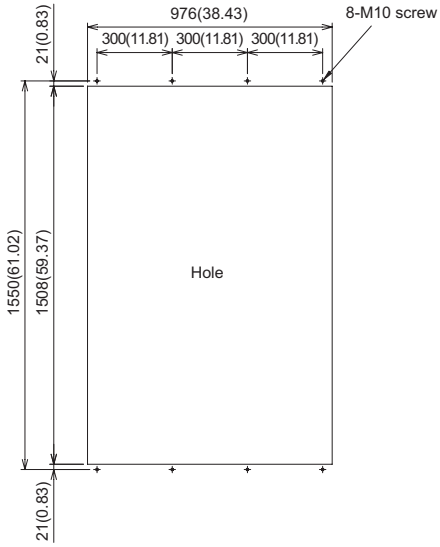

(Unit: mm (inches))

(2) Shift and removal of a rear side installation frame

- **FR-F740-05470 to 06830**

One installation frame is attached to each of the upper and lower part of the inverter. Change the position of the rear side installation frame on the upper and lower side of the inverter to the front side as shown on the right. When changing the installation frames, make sure that the installation orientation is correct.

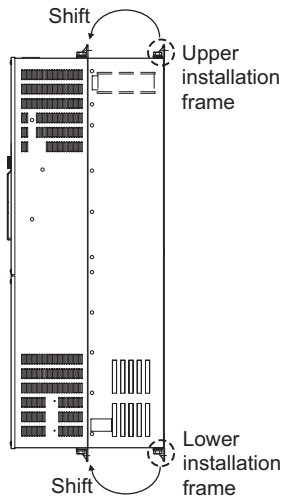

- **FR-F740-04320/04810, 07700 or more**

Two installation frames each are attached to the upper and lower parts of the inverter. Remove the rear side installation frame on the upper and lower side of the inverter as shown on the right.

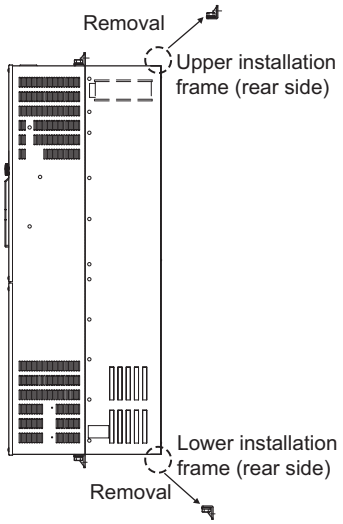

(3) Installation of the inverter

Push the inverter heatsink portion outside the enclosure and fix the enclosure and inverter with upper and lower installation frame.

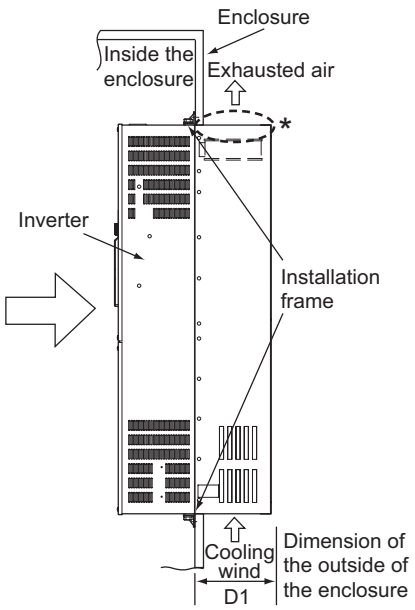

* For the FR-F740-05470 or more, there are finger guards behind the enclosure. Therefore, the thickness of the panel should be less than 10mm(0.39 inch) (*1) and also do not place anything around finger guards to avoid contact with the finger guards.

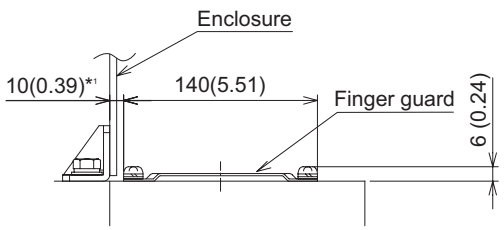

Inverter Model	D1(mm) (inches)
FR-F740-04320, 04810	185(7.28)
FR-F740-05470 to 12120	184(7.24)

CAUTION

- Having a cooling fan, the cooling section which comes out of the enclosure cannot be used in the environment of water drops, oil, mist, dust, etc.
- Be careful not to drop screws, dust etc. into the inverter and cooling fan section.

MEMO

7 APPENDICES

This chapter provides the "APPENDICES" of this product.
Always read the instructions before using the equipment.

Appendix 1 For customers who are replacing the conventional model with this inverter

Appendix 1-1 Replacement of the FR-F500 series

(1) Instructions for installation

1)Removal procedure of the front cover was changed. (with screws) Please note. *(Refer to page 6.)*
2)Removal procedure of the operation panel was changed. (with screws) Please note. *(Refer to page 6.)*
3)Plug-in options of the F500 series are not compatible
4)Operation panel (FR-DU04) cannot be used.
5)Setup software (FR-SW0-SETUP) cannot be used.

(2) Wiring instructions

1)The control circuit terminal block can be used for the FR-F700 series without removing wiring.
Note that the wiring cover (F720-00046 to 00930 (F740-00023 to 00470)) is not compatible.

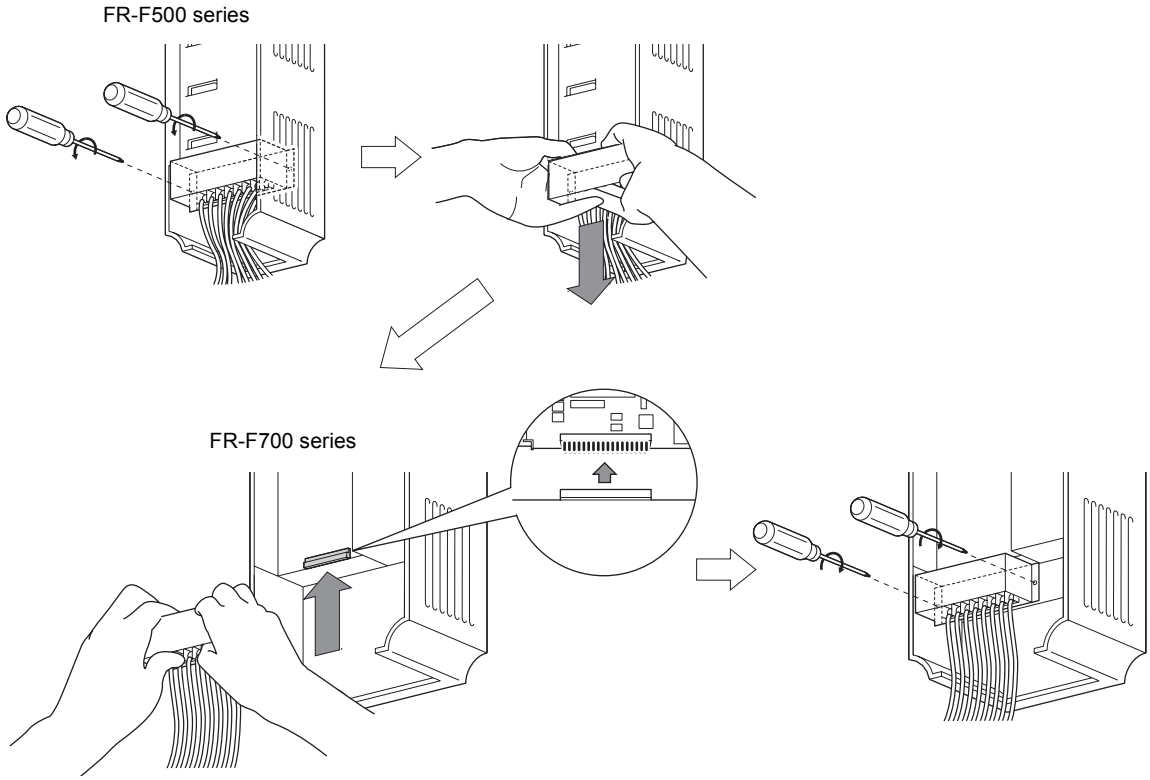

(Note that the relay output 2 (A2, B2, C2) specific for the FR-F700 series cannot be used with the FR-F500 series terminals.)

(3) Instructions for continuous use of the FR-PU04 (parameter unit)

1) For the FR-F700 series, many functions (parameters) have been added. When setting these parameters, the parameter name and setting range are not displayed. Parameter list, change list, initial value list, initial value list 2 and parameter clear of the HELP function cannot be used.
2) For the FR-F700 series, many protective functions have been added. These functions activate, but all faults are displayed as "Fault 14". When the faults history has been checked, "E.14" appears. Added faults display will not appear on the parameter unit.
3) User initial value setting cannot be used.
4) User registration/clear (user group 2) cannot be used.
5) Parameter copy/verification function cannot be used.

(4) Main differences and compatibilities with the FR-F500(L) series

Item		FR-F500(L)	FR-F700
Changed functions	Simple mode parameters	61 parameters	20 parameters Ver.UP
	User group	User group 1 (16), user group 2 (16) (*Pr. 160, Pr. 173* to *Pr. 175*)	User group (16) only Setting methods were partially changed (*Pr. 160, Pr. 172* to *Pr. 173*)
	Communication option	Performing parameter clear and all clear (H5A96, HAA99) with the FR-A7ND clears *Pr. 345* and *Pr. 346*.	*Pr. 345* and *Pr. 346* are not cleared.
	Advanced PID (pump function)	*Pr. 500* to *Pr. 516*	Parameter number change *Pr. 575* to *Pr. 591*
Changed initial value	*Pr. 0 Torque boost*	Initial value	00250 to 00770: 2%, 00930, 01160: 1.5% (When the torque boost value of the FR-F500 series used was the initial value, it is not necessary to change the torque boost value from the initial value when replacing with the FR-F700 series.)
Deleted functions	User initial value setting (*Pr. 199*)	Available	Not available Substitutable with the copy function of the operation panel (FR-DU07)
	Intelligent optimum acceleration/ deceleration	Available (*Pr. 60* setting "3" and *Pr. 61* to *Pr. 63*)	Not available For deceleration time, overvoltage fault can be avoided with regeneration avoidance function (*Pr. 882* to *Pr. 885*).
	Automatic torque boost	*Pr. 38*, *Pr. 39*	Automatic torque boost was cleared because of addition of "Simple magnetic flux vector" (*Pr. 80*)
Terminal block		Removable terminal block	Removable terminal block Upward compatibility (Terminal block of the F500 can be mounted)
PU		FR-PU04, DU04	FR-PU07 FR-DU07 FR-DU04 unavailable (Partly restricted when the FR-PU04 is used. *Refer to page 388.*)
Plug-in option		Dedicated plug-in option (not compatible)	
		Computer link, relay output option FR-A5NR	Built into the inverter (RS-485 terminal, relay output 2 points)
		Three boards can be mounted	Two board can be mounted Ver.UP
Installation size		FR-F720-00046, 00105, 00167, 00340, 00770, 00930, 01250, 01870, FR-F740-00023 to 00083, 00170, 00470, 00770 to 01160 are compatible in mounting dimensions For other capacities, an optional intercompatibility attachment (FR-AAT) is necessary.	

Appendix 1-2 Replacement of the FR-A100 <EXCELENT> series

Instructions for installation

- When using the installation holes of the FR-A100(E) series, FR-A5AT (intercompatibility attachment) is necessary.

Appendix 2 Parameter clear, parameter copy and instruction code list

*1 These instruction codes are used for parameter read and write by using Mitsubishi inverter protocol with the RS-485 communication. (Refer to *page 214* for RS-485 communication)

*2 "○" indicates valid and "×" indicates invalid of "parameter copy", "parameter clear", and "all parameter clear".

*3 These parameters are communication parameters that are not cleared when parameter clear (all clear) is executed from RS-485 communication. (Refer to *page 214* for RS-485 communication)

*4 When a communication option is installed, parameter clear (lock release) during password lock (*Pr. 297* ≠ 9999) can be performed only from the communication option.

Symbols in the table indicate parameters which function when an option is mounted.

AX ..... FR-A7AX, AY ..... FR-A7AY, AR ..... FR-A7AR, NC ..... FR-A7NC, ND ..... FR-A7ND, AC ..... FR-A7AC, AN ..... FR-A7AN, NL ..... FR-A7NL, NP ..... FR-A7NP, NF FR-A7NF

Parameter	Name	Instruction Code *1			Parameter Copy *2	Parameter Clear *2	All Parameter Clear *2
		Read	Write	Extended			
0	Torque boost	00	80	0	○	○	○
1	Maximum frequency	01	81	0	○	○	○
2	Minimum frequency	02	82	0	○	○	○
3	Base frequency	03	83	0	○	○	○
4	Multi-speed setting (high speed)	04	84	0	○	○	○
5	Multi-speed setting (middle speed)	05	85	0	○	○	○
6	Multi-speed setting (low speed)	06	86	0	○	○	○
7	Acceleration time	07	87	0	○	○	○
8	Deceleration time	08	88	0	○	○	○
9	Electronic thermal O/L relay	09	89	0	○	○	○
10	DC injection brake operation frequency	0A	8A	0	○	○	○
11	DC injection brake operation time	0B	8B	0	○	○	○
12	DC injection brake operation voltage	0C	8C	0	○	○	○
13	Starting frequency	0D	8D	0	○	○	○
14	Load pattern selection	0E	8E	0	○	○	○
15	Jog frequency	0F	8F	0	○	○	○
16	Jog acceleration/deceleration time	10	90	0	○	○	○
17	MRS input selection	11	91	0	○	○	○
18	High speed maximum frequency	12	92	0	○	○	○
19	Base frequency voltage	13	93	0	○	○	○
20	Acceleration/deceleration reference frequency	14	94	0	○	○	○
21	Acceleration/deceleration time increments	15	95	0	○	○	○
22	Stall prevention operation level (Torque limit level)	16	96	0	○	○	○
23	Stall prevention operation level compensation factor at double speed	17	97	0	○	○	○
24	Multi-speed setting (speed 4)	18	98	0	○	○	○
25	Multi-speed setting (speed 5)	19	99	0	○	○	○
26	Multi-speed setting (speed 6)	1A	9A	0	○	○	○
27	Multi-speed setting (speed 7)	1B	9B	0	○	○	○
28	Multi-speed input compensation selection	1C	9C	0	○	○	○
29	Acceleration/deceleration pattern selection	1D	9D	0	○	○	○
30	Regenerative function selection	1E	9E	0	○	○	○
31	Frequency jump 1A	1F	9F	0	○	○	○
32	Frequency jump 1B	20	A0	0	○	○	○
33	Frequency jump 2A	21	A1	0	○	○	○
34	Frequency jump 2B	22	A2	0	○	○	○
35	Frequency jump 3A	23	A3	0	○	○	○
36	Frequency jump 3B	24	A4	0	○	○	○
37	Speed display	25	A5	0	○	○	○
41	Up-to-frequency sensitivity	29	A9	0	○	○	○
42	Output frequency detection	2A	AA	0	○	○	○
43	Output frequency detection for reverse rotation	2B	AB	0	○	○	○

Parameter	Name	Instruction Code *1			Parameter Copy *2	Parameter Clear *2	All Parameter Clear *2
		Read	Write	Extended			
44	Second acceleration/deceleration time	2C	AC	0	○	○	○
45	Second deceleration time	2D	AD	0	○	○	○
46	Second torque boost	2E	AE	0	○	○	○
47	Second V/F (base frequency)	2F	AF	0	○	○	○
48	Second stall prevention operation current	30	B0	0	○	○	○
49	Second stall prevention operation frequency	31	B1	0	○	○	○
50	Second output frequency detection	32	B2	0	○	○	○
51	Second electronic thermal O/L relay	33	B3	0	○	○	○
52	DU/PU main display data selection	34	B4	0	○	○	○
54	CA terminal function selection	36	B6	0	○	○	○
55	Frequency monitoring reference	37	B7	0	○	○	○
56	Current monitoring reference	38	B8	0	○	○	○
57	Restart coasting time	39	B9	0	○	○	○
58	Restart cushion time	3A	BA	0	○	○	○
59	Remote function selection	3B	BB	0	○	○	○
60	Energy saving control selection	3C	BC	0	○	○	○
65	Retry selection	41	C1	0	○	○	○
66	Stall prevention operation reduction starting frequency	42	C2	0	○	○	○
67	Number of retries at fault occurrence	43	C3	0	○	○	○
68	Retry waiting time	44	C4	0	○	○	○
69	Retry count display erase	45	C5	0	○	○	○
70	Special regenerative brake duty	46	C6	0	○	○	○
71	Applied motor	47	C7	0	○	○	○
72	PWM frequency selection	48	C8	0	○	○	○
73	Analog input selection	49	C9	0	○	○	○
74	Input filter time constant	4A	CA	0	○	○	○
75	Reset selection/disconnected PU detection/PU stop selection	4B	CB	0	○	×	×
76	Fault code output selection	4C	CC	0	○	○	○
77 *	Parameter write selection	4D	CD	0	○	○	○
78	Reverse rotation prevention selection	4E	CE	0	○	○	○
79 *	Operation mode selection	4F	CF	0	○	○	○
80	Motor capacity	50	D0	0	○	○	○
90	Motor constant (R1)	5A	DA	0	○	×	○
100	V/F1(first frequency)	00	80	1	○	○	○
101	V/F1(first frequency voltage)	01	81	1	○	○	○

* Read and write from communication with PU connector only is enabled.

Parameter	Name	Instruction Code *1			Parameter Copy *2	Parameter Clear *2	All Parameter Clear *2
		Read	Write	Extended			
102	V/F2(second frequency)	02	82	1	○	○	○
103	V/F2(second frequency voltage)	03	83	1	○	○	○
104	V/F3(third frequency)	04	84	1	○	○	○
105	V/F3(third frequency voltage)	05	85	1	○	○	○
106	V/F4(fourth frequency)	06	86	1	○	○	○
107	V/F4(fourth frequency voltage)	07	87	1	○	○	○
108	V/F5(fifth frequency)	08	88	1	○	○	○
109	V/F5(fifth frequency voltage)	09	89	1	○	○	○
117	PU communication station number	11	91	1	○	○*3	○*3
118	PU communication speed	12	92	1	○	○*3	○*3
119	PU communication stop bit length	13	93	1	○	○*3	○*3
120	PU communication parity check	14	94	1	○	○*3	○*3
121	Number of PU communication retries	15	95	1	○	○*3	○*3
122	PU communication check time interval	16	96	1	○	○*3	○*3
123	PU communication waiting time setting	17	97	1	○	○*3	○*3
124	PU communication CR/LF selection	18	98	1	○	○*3	○*3
125	Terminal 2 frequency setting gain frequency	19	99	1	○	×	○
126	Terminal 4 frequency setting gain frequency	1A	9A	1	○	×	○
127	PID control automatic switchover frequency	1B	9B	1	○	○	○
128	PID action selection	1C	9C	1	○	○	○
129	PID proportional band	1D	9D	1	○	○	○
130	PID integral time	1E	9E	1	○	○	○
131	PID upper limit	1F	9F	1	○	○	○
132	PID lower limit	20	A0	1	○	○	○
133	PID action set point	21	A1	1	○	○	○
134	PID differential time	22	A2	1	○	○	○
135	Electronic bypass sequence selection	23	A3	1	○	○	○
136	MC switchover interlock time	24	A4	1	○	○	○
137	Start waiting time	25	A5	1	○	○	○
138	Bypass selection at a fault	26	A6	1	○	○	○
139	Automatic switchover frequency from inverter to bypass operation	27	A7	1	○	○	○
140	Backlash acceleration stopping frequency	28	A8	1	○	○	○
141	Backlash acceleration stopping time	29	A9	1	○	○	○
142	Backlash deceleration stopping frequency	2A	AA	1	○	○	○
143	Backlash deceleration stopping time	2B	AB	1	○	○	○
144	Speed setting switchover	2C	AC	1	○	○	○
145	PU display language selection	2D	AD	1	○	×	×
147	Acceleration/deceleration time switching frequency	2F	AF	1	○	○	○
148	Stall prevention level at 0V input	30	B0	1	○	○	○
149	Stall prevention level at 10V input	31	B1	1	○	○	○
150	Output current detection level	32	B2	1	○	○	○
151	Output current detection signal delay time	33	B3	1	○	○	○
152	Zero current detection level	34	B4	1	○	○	○
153	Zero current detection time	35	B5	1	○	○	○
154	Voltage reduction selection during stall prevention operation	36	B6	1	○	○	○
155	RT signal function validity condition selection	37	B7	1	○	○	○
156	Stall prevention operation selection	38	B8	1	○	○	○
157	OL signal output timer	39	B9	1	○	○	○

Parameter	Name	Instruction Code *1			Parameter Copy *2	Parameter Clear *2	All Parameter Clear *2
		Read	Write	Extended			
158	AM terminal function selection	3A	BA	1	○	○	○
159	Automatic switchover frequency range from bypass to inverter operation	3B	BB	1	○	○	○
160	User group read selection	00	80	2	○	○	○
161	Frequency setting/key lock operation selection	01	81	2	○	×	○
162	Automatic restart after instantaneous power failure selection	02	82	2	○	○	○
163	First cushion time for restart	03	83	2	○	○	○
164	First cushion voltage for restart	04	84	2	○	○	○
165	Stall prevention operation level for restart	05	85	2	○	○	○
166	Output current detection signal retention time	06	86	2	○	○	○
167	Output current detection operation selection	07	87	2	○	○	○
168	Parameter for manufacturer setting. Do not set.						
169							
170	Watt-hour meter clear	0A	8A	2	○	×	○
171	Operation hour meter clear	0B	8B	2	×	×	×
172	User group registered display/batch clear	0C	8C	2	○	×	×
173	User group registration	0D	8D	2	×	×	×
174	User group clear	0E	8E	2	×	×	×
178	STF terminal function selection	12	92	2	○	×	○
179	STR terminal function selection	13	93	2	○	×	○
180	RL terminal function selection	14	94	2	○	×	○
181	RM terminal function selection	15	95	2	○	×	○
182	RH terminal function selection	16	96	2	○	×	○
183	RT terminal function selection	17	97	2	○	×	○
184	AU terminal function selection	18	98	2	○	×	○
185	JOG terminal function selection	19	99	2	○	×	○
186	CS terminal function selection	1A	9A	2	○	×	○
187	MRS terminal function selection	1B	9B	2	○	×	○
188	STOP terminal function selection	1C	9C	2	○	×	○
189	RES terminal function selection	1D	9D	2	○	×	○
190	RUN terminal function selection	1E	9E	2	○	×	○
191	SU terminal function selection	1F	9F	2	○	×	○
192	IPF terminal function selection	20	A0	2	○	×	○
193	OL terminal function selection	21	A1	2	○	×	○
194	FU terminal function selection	22	A2	2	○	×	○
195	ABC1 terminal function selection	23	A3	2	○	×	○
196	ABC2 terminal function selection	24	A4	2	○	×	○
232	Multi-speed setting (speed 8)	28	A8	2	○	○	○
233	Multi-speed setting (speed 9)	29	A9	2	○	○	○
234	Multi-speed setting (speed 10)	2A	AA	2	○	○	○
235	Multi-speed setting (speed 11)	2B	AB	2	○	○	○
236	Multi-speed setting (speed 12)	2C	AC	2	○	○	○
237	Multi-speed setting (speed 13)	2D	AD	2	○	○	○
238	Multi-speed setting (speed 14)	2E	AE	2	○	○	○
239	Multi-speed setting (speed 15)	2F	AF	2	○	○	○
240	Soft-PWM operation selection	30	B0	2	○	○	○
241	Analog input display unit switchover	31	B1	2	○	○	○
242	Terminal 1 added compensation amount (terminal 2)	32	B2	2	○	○	○
243	Terminal 1 added compensation amount (terminal 4)	33	B3	2	○	○	○
244	Cooling fan operation selection	34	B4	2	○	○	○

Parameter	Name	Instruction Code *1			Parameter Copy *2	Parameter Clear *2	All Parameter Clear *2
		Read	Write	Extended			
245	Rated slip	35	B5	2	○	○	○
246	Slip compensation time constant	36	B6	2	○	○	○
247	Constant-power range slip compensation selection	37	B7	2	○	○	○
250	Stop selection	3A	BA	2	○	○	○
251	Output phase loss protection selection	3B	BB	2	○	○	○
252	Override bias	3C	BC	2	○	○	○
253	Override gain	3D	BD	2	○	○	○
255	Life alarm status display	3F	BF	2	×	×	×
256	Inrush current limit circuit life display	40	C0	2	×	×	×
257	Control circuit capacitor life display	41	C1	2	×	×	×
258	Main circuit capacitor life display	42	C2	2	×	×	×
259	Main circuit capacitor life measuring	43	C3	2	○	○	○
260	PWM frequency automatic switchover	44	C4	2	○	○	○
261	Power failure stop selection	45	C5	2	○	○	○
262	Subtracted frequency at deceleration start	46	C6	2	○	○	○
263	Subtraction starting frequency	47	C7	2	○	○	○
264	Power-failure deceleration time 1	48	C8	2	○	○	○
265	Power-failure deceleration time 2	49	C9	2	○	○	○
266	Power failure deceleration time switchover frequency	4A	CA	2	○	○	○
267	Terminal 4 input selection	4B	CB	2	○	×	○
268	Monitor decimal digits selection	4C	CC	2	○	○	○
269	Parameter for manufacturer setting. Do not set.						
296	Password lock level	68	E8	2	○	×	○
297	Password lock/unlock	69	E9	2	○	○*4	○
299	Rotation direction detection selection at restarting	6B	EB	2	○	○	○
300	BCD input bias AX	00	80	3	○	○	○
301	BCD input gain AX	01	81	3	○	○	○
302	BIN input bias AX	02	82	3	○	○	○
303	BIN input gain AX	03	83	3	○	○	○
304	Digital input and analog input compensation enable/disable selection AX	04	84	3	○	○	○
305	Read timing operation selection AX	05	85	3	○	○	○
306	Analog output signal selection AY AN	06	86	3	○	○	○
307	Setting for zero analog output AY AN	07	87	3	○	○	○
308	Setting for maximum analog output AY AN	08	88	3	○	○	○
309	Analog output signal voltage/current switchover AY AN	09	89	3	○	○	○
310	Analog meter voltage output selection AY AN	0A	8A	3	○	○	○
311	Setting for zero analog meter voltage output AY AN	0B	8B	3	○	○	○
312	Setting for maximum analog meter voltage output AY AN	0C	8C	3	○	○	○
313	DO0 output selection AY NC	0D	8D	3	○	○	○
314	DO1 output selection AY NC	0E	8E	3	○	○	○
315	DO2 output selection AY NC	0F	8F	3	○	○	○
316	DO3 output selection AY	10	90	3	○	○	○
317	DO4 output selection AY	11	91	3	○	○	○
318	DO5 output selection AY	12	92	3	○	○	○

Parameter	Name	Instruction Code *1			Parameter Copy *2	Parameter Clear *2	All Parameter Clear *2
		Read	Write	Extended			
319	DO6 output selection AY	13	93	3	○	○	○
320	RA1 output selection AR AC	14	94	3	○	○	○
321	RA2 output selection AR AC	15	95	3	○	○	○
322	RA3 output selection AR	16	96	3	○	○	○
323	AM0 0V adjustment AY AN	17	97	3	○	×	○
324	AM1 0mA adjustment AY AN	18	98	3	○	×	○
325	Terminal 40 input selection AN	19	99	3	○	○	○
329	Digital input unit selection AX	1D	9D	3	○	×	○
331	RS-485 communication station	1F	9F	3	○	○*3	○*3
332	RS-485 communication speed	20	A0	3	○	○*3	○*3
333	RS-485 communication stop bit length	21	A1	3	○	○*3	○*3
334	RS-485 communication parity check selection	22	A2	3	○	○*3	○*3
335	RS-485 communication retry count	23	A3	3	○	○*3	○*3
336	RS-485 communication check time interval	24	A4	3	○	○*3	○*3
337	RS-485 communication waiting time setting	25	A5	3	○	○*3	○*3
338	Communication operation command source	26	A6	3	○	○*3	○*3
339	Communication speed command source	27	A7	3	○	○*3	○*3
340	Communication startup mode selection	28	A8	3	○	○*3	○*3
341	RS-485 communication CR/LF selection	29	A9	3	○	○*3	○*3
342	Communication EEPROM write selection	2A	AA	3	○	○	○
343	Communication error count	2B	AB	3	×	×	×
345	DeviceNet address ND	2D	AD	3	○	○*3	○*3
346	DeviceNet baud rate ND	2E	AE	3	○	○*3	○*3
349	Communication reset selection NC ND NL NP	31	B1	3	○	○*3	○*3
387	Initial communication delay time NL	57	D7	3	○	○	○
388	Send time interval at heart beat NL	58	D8	3	○	○	○
389	Minimum sending time at heart beat NL	59	D9	3	○	○	○
390	% setting reference frequency	5A	DA	3	○	○	○
391	Receive time interval at heart beat NL	5B	DB	3	○	○	○
392	Event driven detection width NL	5C	DC	3	○	○	○
414	PLC function operation selection	0E	8E	4	○	×	×
415	Inverter operation lock mode setting	0F	8F	4	○	○	○
495	Remote output selection	5F	DF	4	○	○	○
496	Remote output data 1	60	E0	4	×	×	×
497	Remote output data 2	61	E1	4	×	×	×
498	PLC function flash memory clear	62	E2	4	×	×	×
500	Communication error execution waiting time NC ND NL NP NF	00	80	5	○	○*3	○*3
501	Communication error occurrence count display NC ND NL NP NF	01	81	5	×	○	○
502	Stop mode selection at communication error	02	82	5	○	○*3	○*3
503	Maintenance timer	03	83	5	×	×	×
504	Maintenance timer alarm output set time	04	84	5	○	×	○
505	Speed setting reference	05	85	5	○	○	○
506	Parameter 1 for user	06	86	5	○	○	○
507	Parameter 2 for user	07	87	5	○	○	○
508	Parameter 3 for user	08	88	5	○	○	○
509	Parameter 4 for user	09	89	5	○	○	○
510	Parameter 5 for user	0A	8A	5	○	○	○

Parameter	Name	Instruction Code *1			Parameter Copy *2	Parameter Clear *2	All Parameter Clear *2
		Read	Write	Extended			
511	Parameter 6 for user	0B	8B	5	○	○	○
512	Parameter 7 for user	0C	8C	5	○	○	○
513	Parameter 8 for user	0D	8D	5	○	○	○
514	Parameter 9 for user	0E	8E	5	○	○	○
515	Parameter 10 for user	0F	8F	5	○	○	○
522	Output stop frequency	16	96	5	○	○	○
539	Modbus-RTU communication check time interval	27	A7	5	○	○*3	○*3
542	Communication station number (CC-Link) NC	2A	AA	5	○	○*3	○*3
543	Baud rate selection (CC-Link) NC	2B	AB	5	○	○*3	○*3
544	CC-Link extended setting NC	2C	AC	5	○	○*3	○*3
549	Protocol selection	31	B1	5	○	○*3	○*3
550	NET mode operation command source selection	32	B2	5	○	○*3	○*3
551	PU mode operation command source selection	33	B3	5	○	○*3	○*3
553	PID deviation limit	35	B5	5	○	○	○
554	PID signal operation selection	36	B6	5	○	○	○
555	Current average time	37	B7	5	○	○	○
556	Data output mask time	38	B8	5	○	○	○
557	Current average value monitor signal output reference current	39	B9	5	○	○	○
563	Energization time carrying-over times	3F	BF	5	×	×	×
564	Operating time carrying-over times	40	C0	5	×	×	×
570	Multiple rating setting	46	C6	5	○	×	×
571	Holding time at a start	47	C7	5	○	○	○
573	4mA input check selection	49	C9	5	○	○	○
575	Output interruption detection time	4B	CB	5	○	○	○
576	Output interruption detection level	4C	CC	5	○	○	○
577	Output interruption cancel level	4D	CD	5	○	○	○
578	Auxiliary motor operation selection	4E	CE	5	○	○	○
579	Motor connection function selection	4F	CF	5	○	○	○
580	MC switching interlock time	50	D0	5	○	○	○
581	Start waiting time	51	D1	5	○	○	○
582	Auxiliary motor connection-time deceleration time	52	D2	5	○	○	○
583	Auxiliary motor disconnection-time acceleration time	53	D3	5	○	○	○
584	Auxiliary motor 1 starting frequency	54	D4	5	○	○	○
585	Auxiliary motor 2 starting frequency	55	D5	5	○	○	○
586	Auxiliary motor 3 starting frequency	56	D6	5	○	○	○
587	Auxiliary motor 1 stopping frequency	57	D7	5	○	○	○
588	Auxiliary motor 2 stopping frequency	58	D8	5	○	○	○
589	Auxiliary motor 3 stopping frequency	59	D9	5	○	○	○
590	Auxiliary motor start detection time	5A	DA	5	○	○	○
591	Auxiliary motor stop detection time	5B	DB	5	○	○	○
611	Acceleration time at a restart	0B	8B	6	○	○	○
653	Speed smoothing control	35	B5	6	○	○	○
654	Speed smoothing cutoff frequency	36	B6	6	○	○	○
665	Regeneration avoidance frequency gain	41	C1	6	○	○	○
726	Auto Baudrate/Max Master	1A	9A	7	○	○	○
727	Max Info Frames	1B	9B	7	○	○	○
728	Device instance number (Upper 3 digit)	1C	9C	7	○	○	○
729	Device instance number (Lower 4 digit)	1D	9D	7	○	○	○
753	Second PID action selection	35	B5	7	○	○	○

Parameter	Name	Instruction Code *1			Parameter Copy *2	Parameter Clear *2	All Parameter Clear *2
		Read	Write	Extended			
754	Second PID control automatic switchover frequency	36	B6	7	○	○	○
755	Second PID action set point	37	B7	7	○	○	○
756	Second PID proportional band	38	B8	7	○	○	○
757	Second PID integral time	39	B9	7	○	○	○
758	Second PID differential time	3A	BA	7	○	○	○
759	PID unit selection	3B	BB	7	○	○	○
760	Pre-charge fault selection	3C	BC	7	○	○	○
761	Pre-charge ending level	3D	BD	7	○	○	○
762	Pre-charge ending time	3E	BE	7	○	○	○
763	Pre-charge upper detection level	3F	BF	7	○	○	○
764	Pre-charge time limit	40	C0	7	○	○	○
765	Second pre-charge fault selection	41	C1	7	○	○	○
766	Second pre-charge ending level	42	C2	7	○	○	○
767	Second pre-charge ending time	43	C3	7	○	○	○
768	Second pre-charge upper detection level	44	C4	7	○	○	○
769	Second pre-charge time limit	45	C5	7	○	○	○
774	PU/DU monitor selection 1	4A	CA	7	○	○	○
775	PU/DU monitor selection 2	4B	CB	7	○	○	○
776	PU/DU monitor selection 3	4C	CC	7	○	○	○
777	4mA input fault operation frequency	4D	CD	7	○	○	○
778	Current input check filter	4E	CE	7	○	○	○
779	Operation frequency during communication error	4F	CF	7	○	○	○
799	Pulse increment setting for output power	63	E3	7	○	○	○
826	Parameter 11 for user	1A	9A	8	○	○	○
827	Parameter 12 for user	1B	9B	8	○	○	○
828	Parameter 13 for user	1C	9C	8	○	○	○
829	Parameter 14 for user	1D	9D	8	○	○	○
830	Parameter 15 for user	1E	9E	8	○	○	○
831	Parameter 16 for user	1F	9F	8	○	○	○
832	Parameter 17 for user	20	A0	8	○	○	○
833	Parameter 18 for user	21	A1	8	○	○	○
834	Parameter 19 for user	22	A2	8	○	○	○
835	Parameter 20 for user	23	A3	8	○	○	○
836	Parameter 21 for user	24	A4	8	○	○	○
837	Parameter 22 for user	25	A5	8	○	○	○
838	Parameter 23 for user	26	A6	8	○	○	○
839	Parameter 24 for user	27	A7	8	○	○	○
840	Parameter 25 for user	28	A8	8	○	○	○
841	Parameter 26 for user	29	A9	8	○	○	○
842	Parameter 27 for user	2A	AA	8	○	○	○
843	Parameter 28 for user	2B	AB	8	○	○	○
844	Parameter 29 for user	2C	AC	8	○	○	○
845	Parameter 30 for user	2D	AD	8	○	○	○
846	Parameter 31 for user	2E	AE	8	○	○	○
847	Parameter 32 for user	2F	AF	8	○	○	○
848	Parameter 33 for user	30	B0	8	○	○	○
849	Parameter 34 for user	31	B1	8	○	○	○
850	Parameter 35 for user	32	B2	8	○	○	○
851	Parameter 36 for user	33	B3	8	○	○	○
852	Parameter 37 for user	34	B4	8	○	○	○
853	Parameter 38 for user	35	B5	8	○	○	○
854	Parameter 39 for user	36	B6	8	○	○	○
855	Parameter 40 for user	37	B7	8	○	○	○
856	Parameter 41 for user	38	B8	8	○	○	○

Parameter	Name	Instruction Code *1			Parameter Copy *2	Parameter Clear *2	All Parameter Clear *2
		Read	Write	Extended			
857	Parameter 42 for user	39	B9	8	○	○	○
858	Parameter 43 for user	3A	BA	8	○	○	○
859	Parameter 44 for user	3B	BB	8	○	○	○
860	Parameter 45 for user	3C	BC	8	○	○	○
861	Parameter 46 for user	3D	BD	8	○	○	○
862	Parameter 47 for user	3E	BE	8	○	○	○
863	Parameter 48 for user	3F	BF	8	○	○	○
864	Parameter 49 for user	40	C0	8	○	○	○
865	Parameter 50 for user	41	C1	8	○	○	○
867	AM output filter	43	C3	8	○	○	○
869	Current output filter	45	C5	8	○	○	○
870	Speed detection hysteresis	46	C6	8	○	○	○
872	Input phase loss protection selection	48	C8	8	○	○	○
882	Regeneration avoidance operation selection	52	D2	8	○	○	○
883	Regeneration avoidance operation level	53	D3	8	○	○	○
884	Regeneration avoidance at deceleration detection sensitivity	54	D4	8	○	○	○
885	Regeneration avoidance compensation frequency limit value	55	D5	8	○	○	○
886	Regeneration avoidance voltage gain	56	D6	8	○	○	○
888	Free parameter 1	58	D8	8	○	×	×
889	Free parameter 2	59	D9	8	○	×	×
891	Cumulative power monitor digit shifted times	5B	DB	8	○	○	○
892	Load factor	5C	DC	8	○	○	○
893	Energy saving monitor reference (motor capacity)	5D	DD	8	○	○	○
894	Control selection during commercial power-supply operation	5E	DE	8	○	○	○
895	Power saving rate reference value	5F	DF	8	○	○	○
896	Power unit cost	60	E0	8	○	○	○
897	Power saving monitor average time	61	E1	8	○	○	○
898	Power saving cumulative monitor clear	62	E2	8	○	×	○
899	Operation time rate (estimated value)	63	E3	8	○	○	○
C0 (900)	CA terminal calibration	5C	DC	1	○	×	○
C1 (901)	AM terminal calibration	5D	DD	1	○	×	○
C2 (902)	Terminal 2 frequency setting bias frequency	5E	DE	1	○	×	○
C3 (902)	Terminal 2 frequency setting bias	5E	DE	1	○	×	○
125 (903)	Terminal 2 frequency setting gain frequency	5F	DF	1	○	×	○
C4 (903)	Terminal 2 frequency setting gain	5F	DF	1	○	×	○
C5 (904)	Terminal 4 frequency setting bias frequency	60	E0	1	○	×	○
C6 (904)	Terminal 4 frequency setting bias	60	E0	1	○	×	○
126 (905)	Terminal 4 frequency setting gain frequency	61	E1	1	○	×	○
C7 (905)	Terminal 4 frequency setting gain	61	E1	1	○	×	○
C8 (930)	Current output bias signal	1E	9E	9	○	○	○

Parameter	Name	Instruction Code *1			Parameter Copy *2	Parameter Clear *2	All Parameter Clear *2
		Read	Write	Extended			
C9 (930)	Current output bias current	1E	9E	9	○	○	○
C10 (931)	Current output gain signal	1F	9F	9	○	○	○
C11 (931)	Current output gain current	1F	9F	9	○	○	○
C42 (934)	PID display bias coefficient	22	A2	9	○	×	○
C43 (934)	PID display bias analog value	22	A2	9	○	×	○
C44 (935)	PID display gain coefficient	23	A3	9	○	×	○
C45 (935)	PID display gain analog value	23	A3	9	○	×	○
989	Parameter copy alarm release	59	D9	9	○	×	○
990	PU buzzer control	5A	DA	9	○	○	○
991	PU contrast adjustment	5B	DB	9	○	×	○
997	Fault initiation	61	E1	9	○	○	○
999	Automatic parameter setting	63	E3	9	×	×	×

Appendix 3 Specification change

Appendix 3-1 SERIAL number check

Refer to *page 2* for the location of the rating plate.

Rating plate example

□	7	○	○○○○○○	SERIAL (Serial No.)
Symbol	Year	Month	Control number	
TC○○○A○○○G○○				TC number

The SERIAL consists of 1 version symbol, 2 numeric characters or 1 numeric character and 1 alphabet letter indicating year and month, and 6 numeric characters indicating control number. Last digit of the production year is indicated as the Year, and the Month is indicated by 1 to 9, X (October), Y (November), and Z (December).

Label on the product package

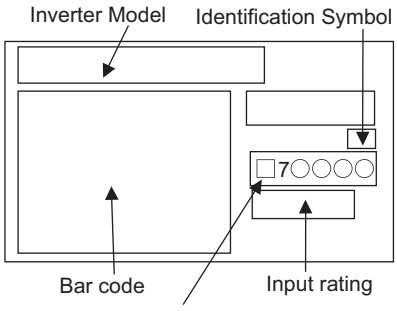

SERIAL (Serial No.)
The SERIAL (Serial No.) indicated on the label of the product package consists of six digits including the first three digits of the control number and a symbol.

Appendix 3-2 Changed functions

(1) Settings "10" and "11" of *Pr.495* are valid for the inverter assembled after the following SERIAL.
The inverters whose communication parameters (*Pr.345* and *Pr.346*) are not cleared when parameter clear/all clear is executed using Class 0x2A instance1 Attribute ID105 and 106 are assembled after the following SERIAL.
Refer to the table below to check the SERIAL indicated on the inverter rating plate or package.

●200V class

Inverter Model	Label on Product Package Identification Symbol	10th and 11th Digits of TC Number on Rating Plate	SERIAL (First 2 Digits of SERIAL)
FR-F720-00046-NA	Without	G5	C7
	<G>	G7	C7
FR-F720-00077-NA	Without	G5	D7
	<G>	G7	C7
FR-F720-00105/00167-NA	Without	G5	D7
	<G>	G7	C7
FR-F720-00250-NA	Without	G5	E7
	<G>	G7	C7
FR-F720-00340/00490-NA	Without	G5	X7
	<G>	G7	C7
FR-F720-00630-NA	Without	G5	Z7
	<G>	G7	D7
FR-F720-00770 to 01250-NA	Without	G5	E7
	<G>	G7	F7
FR-F720-01540 to 02330-NA	Without	G5	A7
	<G>	G7	C7
FR-F720-03160 to 04750-NA	Without	G5	Q7
	<G>	G7	B7

●400V class

Inverter Model	Label on Product Package Identification Symbol	Lower Third and Second Number of TC Number on Rating Plate	SERIAL (Upper Second Numbers of SERIAL)
FR-F740-00023-NA	Without	G5	A7
	<G>	G7	D7
FR-F740-00038 to 00126-NA	Without	G5	B7
	<G>	G7	D7
FR-F740-00170 to 00380-NA	Without	G5	W7
	<G>	G7	E7
FR-F740-00470-NA	Without	G5	Y7
	<G>	G7	H7
FR-F740-00620-NA	Without	G5	Z7
	<G>	G7	H7
FR-F740-00770 to 01160-NA	Without	G5	U7
	<G>	G7	E7
FR-F740-01800-NA	Without	G5	P7
	<G>	G7	C7
FR-F740-02160/02600-NA	Without	G5	P7
	<G>	G7	D7
FR-F740-03250/03610-NA	Without	G5	Q7
	<G>	G7	D7
FR-F740-04320/04810-NA	Without	G5	P7
	<G>	G7	D7
FR-F740-05470-NA	Without	G5	K7
	<G>	G7	D7
FR-F740-06100-NA	Without	G5	L7
	<G>	G7	D7
FR-F740-06830-NA	Without	G5	K7
	<G>	G7	D7
FR-F740-07700/08660-NA	Without	G5	M7
	<G>	G7	B7
FR-F740-09620 to 12120-NA	Without	G5	L7
	<G>	G7	B7

(2) The following functions can be used with the inverter produced in June 2009 or later.
Check the serial number printed on the rating plate or on package.

Item	Changed Functions
Added parameter setting values	*Pr. 29 Acceleration/deceleration pattern selection* setting value "6" *Pr. 30 Regenerative function selection* setting value "10", "11", "20", "21" *Pr. 59 Remote function selection* setting value "11", "12", "13" *Pr.128 PID action selection* setting value "110", "111", "120", "121" *Pr.167 Output current detection operation selection* setting value "10", "11" *Pr. 178 to Pr. 189 Input terminal function selection* setting value "70", "71", "72" *Pr. 190 to Pr. 196 Input terminal function selection* setting value "48", "79", "85", "148", "179", "185" *Pr. 261 Power failure stop selection* setting value "21", "22"
Added parameters	*Pr.522 Output stop frequency* *Pr.553 PID deviation limit* *Pr.554 PID signal operation selection* *Pr.653 Speed smoothing control* *Pr.654 Speed smoothing cutoff frequency* *Pr.799 Pulse increment setting for output power* *C42 (Pr.934) PID display bias coefficient* *C43 (Pr.934) PID display bias analog value* *C44 (Pr.935) PID display gain coefficient* *C45 (Pr.935) PID display gain analog value*
Changed parameter setting ranges	*Pr.153 Zero current detection time* setting range "0 to 1s" → "0 to 10s"

(3) The following functions and two plug-in options can be used with the inverter produced in June 2010 or later. Check the serial number printed on the rating plate or on package.

Item	Changed Functions
Added parameter setting values	*Pr. 30 Regenerative function selection* setting value "100, 101, 120, 121" *Pr. 54 CA terminal function selection and 158 AM terminal function selection* setting value "70" *Pr. 128 PID action selection* setting value "70 to 101" *Pr. 178 to Pr. 189 (input terminal function selection)* setting value "50, 51, 77 and 78" *Pr. 190 to Pr. 196 (output terminal function selection)* setting value "49 to 54, 67, 149 to 154, 167" *Pr.573 4mA input check selection* setting range "2, 3, 4"
Added parameters	*Pr. 147, Pr. 296, Pr. 297, Pr. 414, Pr. 415, Pr. 498, Pr. 502, Pr. 505 to Pr. 515 , Pr. 665, Pr. 753 to Pr. 769, Pr. 774 to Pr. 779, Pr. 826 to Pr. 865, Pr. 870, Pr. 997, Pr. 999, Pr.CH, AUTO,*
Changed parameter setting ranges	*Pr. 263 Subtraction starting frequency* setting range "0 to 120Hz, 9999" to "0 to 400Hz, 9999" *Pr. 885 Regeneration avoidance compensation frequency limit value* setting range "0 to 10Hz, 9999" to "0 to 30Hz, 9999"
Mitsubishi inverter protocol (computer link communication)	· Multi-command · Model information monitor · Cumulative power (32-bit) for a special monitor
Modbus-RTU communication	· Model information monitor · Cumulative power (32-bit) for a real time monitor
Error message	· LOCd Password locked · E.2 Option fault · E.OP2 Communication option fault · E.PCH Pre-charge stop · E.LCI 4mA input fault

(4) BACnet MS/TP protocol and the following functions can be used with the inverter produced in August 2010 or later. Check the serial number printed on the rating plate or on package.

Item	Changed Functions
Added parameter setting values	*Pr. 52 DU/PU main display data selection* setting value "67, 81 to 86" *Pr. 54 CA terminal function selection* setting value "67, 85" *Pr. 158 AM terminal function selection* setting value "67, 86" *Pr. 190 to Pr. 196 (output terminal function selection)* setting value "82 and 182" *Pr. 331 RS-485 communication station number* setting range "0 to 127" *Pr. 332 RS-485 communication speed* setting range "768" *Pr. 549 Protocol selection* setting range "2" *Pr. 774 to Pr. 776 PU/DU monitor selection 1 to 3* setting range "67, 81 to 86"
Added parameters	*Pr. 390, Pr. 726 to Pr. 729*

MEMO

REVISIONS

*The manual number is given on the bottom left of the back cover.

Print Date	*Manual Number	Revision
Sep. 2004	IB(NA)-0600217ENG-A	First edition
Dec. 2004	IB(NA)-0600217ENG-B	Addition · FR-F720 - 03160 to 04750 - NA · FR-F740 - 04320 to 12120 - NA
May 2006	IB(NA)-0600217ENG-C	· Partial modification Addition · Panel cut dimension of heatsink protrusion · *Pr. 539* · Voltage/current input switch
Aug. 2008	IB(NA)-0600217ENG-D	Addition · Additional explanation to "Causes and corrective actions" · Addition of setting values "10" and 11" to *Pr. 495*
Sep. 2009	IB(NA)-0600217ENG-E	Addition · *Pr. 59* setting value "11 ", "12 ", "13 " · *Pr. 29* setting value "6" · *Pr. 30* setting value "10", "11", "20", "21" · *Pr.128* setting value "110", "111", "120", "121" · *Pr.167* setting value "10", "11" · *Pr. 261* setting value "21", "22" · *Pr.522, Pr.653 , Pr.654, Pr.553, Pr.554, C42 (Pr.934), C43 (Pr.934), C44 (Pr.935), C45 (Pr.935), Pr.799* · DC feeding operation permission signal (X70), DC feeding cancel signal (X71), PID integral value reset signal (X72) · PID deviation limit signal (Y48), Pulse output of output power signal (Y79), DC feeding signal (Y85) Partial modification · *Pr. 153* setting range "0 to 10s" · 5.5 Check first when you have a trouble

May 2010	IB(NA)-0600217ENG-F	Addition
		· Two plug-in options available
		· *Pr. 147, Pr. 296, Pr. 297, Pr. 414, Pr. 415, Pr. 498, Pr. 502, Pr. 505 to Pr. 515, Pr. 665, Pr. 753 to Pr. 769, Pr. 774 to Pr. 779, Pr. 826 to Pr. 865, Pr. 870, Pr. 997, Pr. 999, Pr. CH, AUTO*
		· *Pr. 30* setting value "100, 101, 120, 121"
		· *Pr. 54 and Pr.158* setting value "70"
		· *Pr. 128* setting value "70 to 101"
		· *Pr. 178 to Pr. 189* setting value "50, 51, 77, 78"
		· *Pr. 190 to Pr. 196* setting value "49 to 54, 67, 149 to 154, 167"
		· *Pr. 573* setting value "2, 3, 4"
		· Error message
		  · LOCd Password locked
		  · E.2 Option fault
		  · E.OP2 Communication option fault
		  · E.PCH Pre-charge fault
		  · E.LCI 4mA input fault
		Partial modification
		· *Pr. 263* setting range "0 to 120Hz, 9999" to "0 to 400Hz, 9999"
		· *Pr. 885* setting range "0 to 10Hz, 9999" to "0 to 30Hz, 9999"

Jul. 2010	IB(NA)-0600217ENG-G	Addition · *Pr. 390, Pr. 726 to Pr. 729* · *Pr. 52* setting value "67, 81 to 86" · *Pr. 54* setting value "67, 85" · *Pr. 158* setting value "67, 86" · *Pr. 190 to Pr. 196* setting value "82 and 182" · *Pr. 331* setting range "0 to 127" · *Pr. 332* setting range "768" · *Pr. 549* setting range "2" · *Pr. 774 to Pr. 776* setting value "67, 81 to 86" Partial modification · Data of 32-bit cumulative power monitor

MITSUBISHI ELECTRIC CORPORATION
HEAD OFFICE: TOKYO BUILDING 2-7-3, MARUNOUCHI, CHIYODA-KU, TOKYO 100-8310, JAPAN

IB(NA)-0600217ENG-G (1007)MEE Printed in Japan

Specifications subject to change without notice.